This is a digital copy of a book that was preserved for generations on library shelves before it was carefully scanned by Google as part of a project to make the world's books discoverable online.

It has survived long enough for the copyright to expire and the book to enter the public domain. A public domain book is one that was never subject to copyright or whose legal copyright term has expired. Whether a book is in the public domain may vary country to country. Public domain books are our gateways to the past, representing a wealth of history, culture and knowledge that's often difficult to discover.

Marks, notations and other marginalia present in the original volume will appear in this file - a reminder of this book's long journey from the publisher to a library and finally to you.

Usage guidelines

Google is proud to partner with libraries to digitize public domain materials and make them widely accessible. Public domain books belong to the public and we are merely their custodians. Nevertheless, this work is expensive, so in order to keep providing this resource, we have taken steps to prevent abuse by commercial parties, including placing technical restrictions on automated querying.

We also ask that you:

+ *Make non-commercial use of the files* We designed Google Book Search for use by individuals, and we request that you use these files for personal, non-commercial purposes.

+ *Refrain from automated querying* Do not send automated queries of any sort to Google's system: If you are conducting research on machine translation, optical character recognition or other areas where access to a large amount of text is helpful, please contact us. We encourage the use of public domain materials for these purposes and may be able to help.

+ *Maintain attribution* The Google "watermark" you see on each file is essential for informing people about this project and helping them find additional materials through Google Book Search. Please do not remove it.

+ *Keep it legal* Whatever your use, remember that you are responsible for ensuring that what you are doing is legal. Do not assume that just because we believe a book is in the public domain for users in the United States, that the work is also in the public domain for users in other countries. Whether a book is still in copyright varies from country to country, and we can't offer guidance on whether any specific use of any specific book is allowed. Please do not assume that a book's appearance in Google Book Search means it can be used in any manner anywhere in the world. Copyright infringement liability can be quite severe.

About Google Book Search

Google's mission is to organize the world's information and to make it universally accessible and useful. Google Book Search helps readers discover the world's books while helping authors and publishers reach new audiences. You can search through the full text of this book on the web at `http://books.google.com/`

PATENT OFFICE
REPORT
2ND SESS. 41ST CONG.
VOL. 3.
1869-'70.
COMMITTEE ROOM.
No. 14.
1422

EXECUTIVE DOCUMENTS

PRINTED BY ORDER OF THE

HOUSE OF REPRESENTATIVES

DURING THE

SECOND SESSION OF THE FORTY-FIRST CONGRESS.

1869-'70.

IN THIRTEEN VOLUMES.

Volume 1	No. 1. Navy and Postmaster General.
Volume 2	No. 1. War: Parts 1 and 2.
Volume 3	No. 1. Interior: Part 3.
Volume 4	Nos. 2 and 3.
Volume 5	No. 4 to 48.
Volume 6	No. 49 to 142, except 76* and 102.
Volume 7	No. 143 to 215, except 206 and 207.
Volume 8	No. 206. Coast Survey.
Volume 9	No. 102. Patents: Parts 1, 2, 3 and 4.
Volume 10	No. 207. Mines and Mining.
Volume 11	No. 216 to 256, except 232* and 254*.
Volume 12	No. 257 to 307.
Volume 13	No. 308 to 315.

*Not printed; copy returned.

WASHINGTON.
GOVERNMENT PRINTING OFFICE.
1870.

LELAND STANFORD JUNIOR
LIBRARY
UNIVERSITY.
A 11120

INDEX

TO

THE EXECUTIVE DOCUMENTS

OF THE

HOUSE OF REPRESENTATIVES OF THE UNITED STATES

OF THE

SECOND SESSION OF THE FORTY-FIRST CONGRESS.

Title.	Vol.	Part.	No.	Page.
A.				
Abecassis, Mr., contracts with. Letter from the Secretary of the Navy relative to	5	.....	48	
Adjutant General of the Army. Annual report of the	2	2	1	146
Admirals, board of. Letter from the Secretary of the Navy transmitting report of the	5	.....	37	
Agent, colonization. Letter from the Secretary of the Treasury relative to the accounts of the	11	.....	227	
Agents, special of the Treasury Department. Letter from the Secretary relative to names of all	6	.....	133	
Agents, special, of the Treasury Department. Letter from the Secretary of the Treasury relative to number now on duty	6	.....	141	
Agriculture, Commissioner of. Letter from the, in response to a resolution of the House of 26th January relative to foreign commodities susceptible of production in this country	6	.....	107	
Agricultural Company. Letter from the Secretary of the Treasury relative to payment of awards under the treaty of the Hudson Bay and Puget Sound	11	.....	220	
Alabama. Letter from the Secretary of the Treasury relative to certain custom-houses in the State of	6	.....	104	
Alabama. Message from the President transmitting action of the legislature of the State of, on the fifteenth amendment	5	.....	26	
Alabama. Letter from the Secretary of the Treasury relative to marine hospital at Mobile	11	.....	246	
Alaska. Letter from the Secretary of the Treasury transmitting report of the late special agent for	5	.....	36	
Alaska. Letter from the Secretary of the Treasury transmitting report of acting inspector of customs relative to Youkon River, and the islands of St. Paul and St. George	6	.....	112	
Alaska. Letter from the Secretary of the Treasury relative to the fur-seal fisheries of	6	.....	129	
Alaska. Letter from the Secretary of the Treasury of same import	6	.....	136	
Alaska. Letter from the Secretary of the Treasury transmitting statement of revenue and customs receipts in	7	.....	143	
Alaska. Letter from the Secretary of the Treasury transmitting copy of report of Vincent Colyer	7	.....	144	
Alaska. Letter from the Secretary of the Treasury relative to an appropriation to survey, and the Aleutian Islands	11	.....	255	
American citizens, prisoners in Great Britain. Message from the President relative to	7	.....	170	

Title.	Vol.	Part.	No.	Page.
Annuities withheld from Indian tribes. Letter from the Secretary of the Interior relative to	6	.....	130	
Appropriations. Letter from the Secretary of the Treasury transmitting estimates of, for fiscal year 1871	5	.....	5	
Appropriation. Letter from the Secretary of the Treasury asking an, for publishing the laws of the United States	5	.....	8	
Appropriation. Letter from the Surgeon General asking an, for care of transient paupers at Providence Hospital	5	.....	10	
Appropriations. Letter from the Postmaster General transmitting estimates of, for next fiscal year	5	.....	13	
Appropriation. Letter from the Secretary of the Treasury relative to an, for purchase of the buildings on David's Island	6	.....	54	
Appropriations. Letter from the Secretary of the Treasury transmitting estimates of deficiencies in	6	.....	65	
Appropriations. Letter from the Secretary of the Interior transmitting estimates for, for certain Indians	6	.....	67	
Appropriations. Letter from the Secretary of the Treasury transmitting letter from the secretary of Utah relative to deficiency in, for that Territory	6	.....	68	
Appropriations. Letter from the Secretary of War transmitting estimate of, for his Department	6	.....	80	
Appropriations. Letter from the Secretary of the Interior transmitting communication from the Board of Indian Commissioners relative to, for Indians	6	.....	84	
Appropriations. Letter from the Secretary of War transmitting estimates of, for deficiencies	6	.....	86	
Appropriations. Letter from the Secretary of War relative to deficiencies in, for pay of Indian interpreters	6	.....	117	
Appropriations. Letter from the Secretary of the Interior recommending, for pay of outstanding indebtedness on account of the Indian service in Montana Territory	6	.....	137	
Appropriations. Letter from the Secretary of the Interior recommending, to pay vouchers on account of Indian service in the Sioux Indian district	6	.....	138	
Appropriation. Letter from the Secretary of the Interior recommending an, to pay certain claims for Indian service	7	.....	148	
Appropriation. Letter from the Secretary of the Interior relative to an, for the benefit of the House of Correction for Boys	7	.....	149	
Appropriation. Letter from the Secretary of the Interior recommending an, to pay indebtedness on account of Indian service at Fort Berthold agency	7	.....	150	
Appropriation. Letter from the Secretary of the Interior relative to payment of claims of S. E. Ward	7	.....	152	
Appropriation. Letter from the Secretary of War transmitting estimates required to carry into effect the law for taking meteorological observations	7	.....	162	
Appropriations. Letter from the Secretary of the Interior transmitting estimate for, for the purchase of mills, and construction of buildings for the Flathead Indians	7	.....	165	
Appropriation. Letter from the Secretary of War recommending an, to continue the Army recruiting service	7	.....	167	
Appropriation. Letter from the Secretary of the Interior asking an, to pay for use of building for Department of Education	7	.....	190	
Appropriation. Letter from the Supervising Architect of the Treasury Building relative to an, for grading, &c., around the custom-house lot at Wiscasset, Maine	7	.....	173	
Appropriation. Letter from the Secretary of the Treasury asking an, of $230,000 to meet the current expenses of the marine hospital service	7	.....	196	
Appropriation. Letter from the Secretary of the Interior for an, to carry out treaty stipulations with Delaware Indians	7	.....	202	

Title.	Vol.	Part.	No.	Page.
Appropriations. Letter from the Secretary of War relative to insufficiency of, for rent, &c., of Paymaster General's Office	7	.....	204	
Appropriation. Letter from the Secretary of the Interior asking an, for payment of losses sustained by soldiers who enlisted in the federal Army, and loyal refugee Indians and freedmen	11	.....	217	
Appropriation. Letter from the Secretary of the Treasury relative to an, to pay awards under the Hudson's Bay and Puget Sound Agricultural Company's treaty with her Britannic Majesty	11	.....	220	
Appropriation. Letter from the Secretary of War relative to the large demands upon the, for pay to discharged soldiers for clothing not drawn	11	.....	223	
Appropriations. Letter from the Secretary of the Interior transmitting estimates of, for survey of lands within the limits of the Union Pacific Railroad grant	11	.....	230	
Appropriated. Letter from the Secretary of War transmitting statement of amount of money, up to present time for fortifications, &c	11	.....	243	
Appropriation. Letter from the Secretary of War asking an, to satisfy a judgment obtained against Grenville M. Dodge	11	.....	245	
Appropriation. Letter from the Secretary of the Treasury transmitting communication from Superintendent of the United States Coast Survey asking an, to survey Alaska and the Aleutian Islands	11	.....	255	
Appropriation. Letter from the Secretary of the Treasury relative to an, for the purpose of ventilating a portion of the Treasury building	11	.....	257	
Appropriation. Letter from the Secretary of the Treasury transmitting estimate of, for expenses of surveyor general's office, Wyoming Territory	11	.....	259	
Appropriation. Letter from the Secretary of the Interior asking an, of $250,000 for purchase of subsistence for the Arapaho, Cheyenne, and other tribes of Indians	11	.....	261	
Appropriation. Letter from the Secretary of the Interior transmitting estimate of, to prosecute the exploration of the Colorado River	11	.....	280	
Appropriation. Letter from the Secretary of the Interior relative to an, to carry on the work of instructing Indians in the arts of civilization	11	.....	284	
Appropriation. Letter from the Secretary of the Interior transmitting estimates of, to defray expenses of delegations of Indians visiting Washington	11	.....	291	
Appropriation. Letter from the Secretary of the Interior asking an, to pay the Sioux Indians according to treaty of 1858	12	.....	297	
Appropriation. Letter from the Acting Secretary of the Treasury asking an, for marine hospital service for next fiscal year	12	.....	298	
Appropriation. Letter from the Secretary of the Interior recommending an, for the ninth census	12	.....	299	
Appropriation. Letter from the Secretary of the Interior asking an, for removal of the Kaw Indians from Kansas to the Indian Territory	12	.....	303	
Appropriation. Letter from the Secretary of the Interior recommending an, of $100,000 to pay certain Indian depredation claims	13	.....	311	
Aqueduct, Washington. Letter from the Secretary of the Treasury transmitting statement of amount appropriated and expended upon the	6	.....	56	
Armendaris, Pedro. Letter from the Secretary of the Treasury relative to the claim of	6	.....	73	
Armory. Letter from the Secretary of War relative to expenditures of the, at Springfield	5	.....	32	

Title.	Vol.	Part.	No.	Page.
Army. Annual report of the General of the	2	2	1	
Army. Letter of the Secretary of War transmitting statement of retired officers of the, now on duty	5	.....	38	
Army. Letter from the General of the, relative to certain officers of the, acting in the legislature of Georgia as a committee of election	6	.....	82	
Army. Letter from the Secretary of War asking an appropriation to continue recruiting service of the, for present fiscal year	7	.....	167	
Army. Letter from the Secretary of War relative to blacksmiths, &c., in the	7	.....	183	
Army. Letter from the Secretary of War relative to blacksmiths, &c., in the	7	.....	212	
Army. Letter from the Secretary of War relative to expenses of headquarters, &c., of the	11	.....	238	
Army. Letter from the Secretary of War relative to expenses of headquarters, &c., of the	12	.....	262	
Army. Letter from the Secretary of War relative to demands upon, appropriation for pay to discharged soldiers for clothing not drawn	11	.....	223	
Army. Letter from the Secretary of War answering the House relative to officers of the, on duty in the southern States drawing salaries from both the State treasuries and United States treasury	7	.....	211	
Army. Letter from the Secretary of War transmitting memorial of the soldiers of the regular	7	.....	191	
Arsenals. Letter from the Secretary of War relative to the sale of surplus military	5	.....	39	
Arsenals. Letter from the Secretary of War transmitting statement of copper and other metals in the various	6	.....	119	
Artillery school. Letter from the Secretary of War transmitting certain papers relating to the site of the, at Fortress Monroe	6	.....	49	
Attorney General. Letter from the, relative to clerks in his office	5	.....	11	
B.				
Balances unexpended. Letter from the Secretary of the Treasury transmitting statement of	6	.....	79	
Balances unexpended. Letter from the Secretary of the Treasury relating to	7	.....	155	
Banking associations. Letter from the Secretary of the Treasury transmitting report of the Comptroller of the Currency relative to national	6	.....	74	
Banking capital in the several States. Letter from the Secretary of the Treasury transmitting statement of	6	.....	95	
Bank-note companies. Letter from the Secretary of the Treasury relative to the amount of money paid to	7	.....	188	
Banks, national. Letter from the Secretary of the Treasury transmitting report of the Comptroller of the Currency relative to	7	.....	173	
Barnard, Professor H. Report of, on schools in the District of Columbia	13	.....	315	
Battery, sale of the, in New York, for custom-house stores. Letter from the Secretary of the Treasury relative to	12	.....	294	
Belger, James. Letter from the Secretary of War transmitting a copy of the opinion of the Attorney General relative to case of	6	.....	72	
Beneficial Society of the Laboring Sons of Cumberland. Letter from the Secretary of War relative to lands desired by	6	.....	64	
Blacksmiths and artificers in the army. Letter from the Secretary of War relative to pay of	7	.....	212	

Title.	Vol.	Part.	No.	Page.
Blacksmiths and artificers in the Army. Letter from the Secretary of War relative to the pay of	7	.....	183	
Bonds. Letter from the Secretary of the Treasury relative to purchase of, for the sinking fund	11	.....	231	
Bonds. Letter from the Secretary of the Treasury relative to the interest due upon the, issued to the Pacific Railroad Company	11	.....	234	
Bounty. Letter from the Secretary of the Treasury relative to, for soldiers of the regular Army	7	.....	191	
Bounty. Letter from the Secretary of War relative to collection and payment of, to colored soldiers	11	.....	241	
Bounty. Letter from the Secretary of War relative to the decision of the Supreme Court relating to	11	.....	253	
Brady, John R. Message of the President transmitting papers relative to the claim of	12	.....	279	
Breakwater at Hyannis, Massachusetts. Letter from the Secretary of War transmitting report upon condition of.	6	.....	63	
Bridge. Letter from the Secretary of the Interior transmitting account of S. Seymour of expenses in making survey for a, across the Potomac	5	.....	19	
Bridge. Letter from the Secretary of War transmitting report of the Chief of Engineers upon the Rock Island	5	.....	31	
Buildings. Letter from the Secretary of War relative to new War Department	6	.....	116	
Bureau of Freedmen and Abandoned Lands. Letter from the Superintendent of, relative to amount expended in the execution of his office	6	.....	142	
C.				
California. Letter from the Secretary of the Interior relative to an Indian reservation in San Diego County	12	.....	296	
Canal, the Darien ship. Message from the President relative to appropriations for	6	.....	81	
Canal, the Louisville and Portland. Letter from the Secretary of War relative to	11	.....	242	
Captured and abandoned property. Secretary of the Treasury communicates relative to	6	.....	89	
Cavazos, Maria Josefa. Letter from the Secretary of War relative to claim of	7	.....	200	
Census. Letter from the Acting Secretary of the Interior recommending an appropriation for the ninth	12	.....	299	
Census. Letter from the Secretary of the Interior transmitting a draught of bill amendatory of the act to take the seventh	7	.....	161	
Chilton, John, heirs of. Letter from the Secretary of the Treasury relative to claim of	12	.....	276	
China and Japan "indemnity funds." Letter from the Secretary of State relative to the	6	.....	69	
China. Letter from the Secretary of the Treasury relative to the value of the tael of	11	.....	229	
Claim. Letter from the Secretary of War relative to the, of William A. Howard, for pay as colonel, &c	5	.....	21	
Claim. Letter from the Secretary of War relative to the, of the fourth congressional district of Missouri	5	.....	23	
Claim. Letter from the Secretary of War relative to the, of Commodore Thomas Ap C. Jones	6	.....	58	
Claim. Letter from the Secretary of the Treasury relative to the, of Pedro Armendaris	6	.....	73	
Claim. Letter from the Secretary of the Interior relative to the, of the Delaware Indians	6	.....	108	
Claim. Letter from the Secretary of the Interior relative to the, of the Kansas Indians	6	.....	127	
Claims. Message of the President relative to the, of American citizens against Spain	6	.....	139	
Claims. Letter from the Secretary of the Interior relative to the payment of certain, for Indian service, allowed	7	.....	148	

Title.	Vol.	Part.	No.	Page.
Claims. Letter from the Secretary of the Interior relative to the, of the Pottawatomie Indians	7	.....	154	
Claims. Letter from the Secretary of the Interior transmitting copy of report on the Rio Hondo, of Louisiana	7	.....	157	
Claims. Message from the President relative to the, of American citizens against Venezuela	7	.....	176	
Claim. Letter from the Secretary of War relative to the, of Maria Josefa Cavazos	7	.....	200	
Claim. Letter from the Secretary of the Interior relative to the, of A. P. Hotaling	11	.....	218	
Claim. Letter from the Secretary of the Treasury relative to the, of the heirs of John Chilton, deceased	12	.....	276	
Claim. Message from the President relative to the, of John R. Brady	12	.....	279	
Claims. Letter from the Secretary of War relative to the, of Thomas W. Fry, jr	12	.....	287	
Claim. Letter from the Secretary of the Navy relative to the, of Black Beaver, a Delaware Indian	12	.....	290	
Claim. Letter from the Secretary of War relative to the, of Dr. Alexander Dunbar	12	.....	302	
Clerks in State Department. Letter from the Secretary of State transmitting statement of number, compensation, &c, of the	5	.....	9	
Clerks in office of Attorney General. Letter from the Attorney General relative to	5	.....	11	
Clerks in the Post Office Department. Letter from the Postmaster General transmitting statement of number of, for year 1869	5	.....	24	
Clerks in the Treasury Department. Letter from the Secretary of the Treasury transmitting statement of number of, &c	6	.....	93	
Clerks in Navy Department. Letter from the Secretary of the Navy transmitting statement of number of, &c	6	.....	97	
Clerks in the Ordnance Department. Letter from the Secretary of War relative to necessity of additional	6	.....	106	
Coast defenses. Letter from the Secretary of War relative to a system of	12	.....	271	
Coast Survey. Report of the Superintendent of the United States	6	.....	75	
Coast Survey. Report of the Superintendent of the United States	8	.....	206	
Collectors of internal revenue. Letter from the Secretary of the Treasury transmitting statement of balances due from	12	.....	267	
Colonization. Letter from the Secretary of the Treasury relative to the, of persons of African descent	11	.....	222	
Colonization agent. Letter from the Secretary of the Treasury relative to the accounts of the	11	.....	227	
Commerce. Letter from the Secretary of the Treasury relative to indemnity for aggressions upon our	6	.....	51	
Commerce. Letter from the Secretary of the Treasury relative to the foreign, of the United States, and decadence of American shipping	6	.....	111	
Conference, international monetary, at Paris. Message of the President transmitting report of the delegate to the	12	.....	266	
Connecticut. Letter from the Secretary of War in answer to resolution of House of December 21, 1869, with report of Chief of Engineers on the harbor of New Haven	5	.....	41	
Constitution. Message of the President transmitting the action of Alabama on the fifteenth amendment of the	5	.....	26	
Constitution. Message of the President transmitting list of the States ratifying the fifteenth amendment of the	5	.....	15	
Contingent expenses of the Treasury Department. Letter from the Secretary of the Treasury transmitting statement of, for year 1869	6	.....	147	

Title.	Vol.	Part.	No.	Page.
Contingent expenses of the State Department. Letter from the Secretary of State transmitting statement of the, for year 1869	6	.....	110	
Contingent expenses of the War Department. Letter from the Secretary of War transmitting statement of the	6	.....	78	
Contracts. Letter from the Secretary of the Interior relative to, with Dempsey and O'Toole	12	.....	278	
Contracts. Letter from the Secretary of the Navy relative to, with Mr. Abecassis	5	.....	48	
Convention, postal, with France. Letter from the Postmaster General in answer to a resolution of inquiry relative to	5	.....	40	
Cooper, Surgeon George E. Letter from the Secretary of War relative to presentation of a watch and chain to, by the government of France	11	.....	252	
Copper, and other metals in various arsenals. Letter from the Secretary of War relative to quantity of	6	.....	119	
Copyright of the revenue coupon book. Letter from the Commissioner of Internal Revenue relative to	6	.....	126	
Coupon book. Letter from the Secretary of the Treasury relative to copyright of the	6	.....	126	
Court. Decision of the Supreme, relative to bounties	11	.....	253	
Cuba. Message of the President, relative to	5	.....	22	
Cuba. Message of the President of same import	7	.....	160	
Cuba. Message of the President relative to the murder of American citizens in	6	1, 2	140	
Currency. Annual report of the Comptroller of the	4	.....	3	
Papers accompanying the above.				
Statement showing the number of banks, amount of capital, amount of bonds deposited, and circulation, in each State and Territory, on the 30th of September, 1869	4	.....	3	23
Statement showing the national banks in liquidation, their capital, bonds deposited to secure circulation, circulation delivered, circulation surrendered and destroyed, and circulation outstanding October 1, 1869	4	.....	3	24
Statement showing the national banks, in voluntary liquidation, that have deposited lawful money with the Treasurer of the United States to redeem their circulation, withdrawn their bonds, and are closed under the provisions of section 42 of the act; their capital, circulation issued, circulation surrendered, circulation redeemed by the Treasurer of the United States, and circulation outstanding on the 1st day of October, 1869	4	.....	3	24
Statement showing the national banks in the hands of receivers, their capital, amount of United States bonds and lawful money deposited to secure circulation, amount of circulation delivered, the amount of circulation redeemed at the treasury of the United States, and the amount outstanding on the 1st day of October, 1869	4	.....	3	25
Table of the state of the lawful money reserve (required by sections 31 and 32 of the national currency act) of the national banking associations of the United States, as shown by their reports of the 4th of January, 1869	4	.....	3	26
Expenditures of the office of Comptroller of the Currency for the fiscal year ending June 30, 1869	4	.....	3	35
Names and compensation of officers and clerks in the office of Comptroller of the Currency	4	.....	3	35
Customs. Letter from the Secretary of the Treasury transmitting draught of a bill to remedy embarrassments in collection of	12	.....	292	
Customs. Letter from the Secretary of the Treasury relative to the customs cartage system of the port of New York	13	.....	313	

Title.	Vol.	Part.	No.	Page.
Custom-houses. Letter from the Secretary of the Treasury relative to repairs of certain, in the South	6	.....	104	
Custom-house. Letter from the Secretary of the Treasury relative to purchase of additional land for the, at Castine, Maine	6	.....	103	
Custom-house. Letter from the Secretary of the Treasury relative to the, at Wiscasset, Maine	7	.....	193	
D.				
Dakota. Letter from the Secretary of War relative to Fort Dakota, in the Territory of	7	.....	189	
Darien. Letter from the Secretary of the Navy relative to the report of Rear-Admiral Davis, on interoceanic communication at the Isthmus of	6	.....	131	
Davis, Jefferson. Letter from the Secretary of the Treasury relative to the payment of the bounty for capture of.	5	.....	34	
Davis, Jefferson. Letter from the Secretary of War of same import	5	.....	35	
Debt, public. Letter from the Secretary of the Treasury in answer to a resolution of the House of July 6, 1870, relative to the amount of the, at the end of each fiscal year	13	.....	310	
Defense, sites for national works of. Letter from the Secretary of War, with form of bill relative to	7	.....	164	
Delaware. Letter from the Secretary of War transmitting report of surveys of the harbor of Christiana River, at Wilmington, in the State of	11	.....	224	
Dempsey & O'Toole, contract with. Letter from the Secretary of the Interior relative to	12	.....	278	
District of Columbia, expenditures in the. Letter from the Secretary of the Treasury transmitting statement of, from the establishment of the Government to December 31, 1869	7	.....	156	
District of Columbia. Report of Professor H. Barnard on schools in the	13	.....	315	
Dodge, Grenville M., *et al.* Letter from the Secretary of War asking an appropriation to satisfy a judgment against	11	.....	245	
Dodge, Grenville M., *et al.* Letter from the Secretary of War on same subject	.....	.....	258	
Drop beer and slops, distillation of. Letter from the Commissioner of Internal Revenue relative to	6	.....	131	
Dunbar, Dr. Alexander. Letter from the Secretary of War relative to claim of	12	.....	302	
E.				
Education, Bureau of. Letter from the Secretary of the Interior asking an appropriation to pay rent of building for use of	7	.....	190	
Election, expenses of the, in Texas. Letter from the Secretary of War relative to an appropriation for	6	.....	59	
Election. Letter from the Secretary of War transmitting copies of the returns of, in second congressional district of Texas	12	.....	265	
Employés in navy yards. Letter of the Secretary of the Navy transmitting statement of the number of	6	.....	96	
Exhibition, International, of London. Letter from the Secretary of State relative to the	7	.....	181	
Exploration of the Colorado River. Letter of the Secretary of War relative to the	12	.....	281	
Exploration of the Colorado River. Letter of the Secretary of the Interior on same subject	12	.....	280	
Estimates of appropriations required for the service of the fiscal year ending June 30, 1871. Letter from the Secretary of the Treasury transmitting	5	.....	5	

Title.	Vol.	Part.	No.	Page.
Papers accompanying the above.				
Estimates of deficiencies required to complete the service of the fiscal year ending June 30, 1870	5	.....	5	4
Estimates for 1870–'71	.....	.....	5	2
LEGISLATIVE.				
Compensation and mileage of Senators	5	.....	5	2
Compensation and mileage of officers, clerks, &c., in the service of the Senate	5	.....	5	2
Contingent expenses of the Senate	5	.....	5	3
Compensation and mileage of members and delegates of House of Reprentatives	5	.....	5	3
Compensation and mileage of officers, clerks, &c., of House of Representatives	5	.....	5	3
Contingent expenses of the House of Representatives	5	.....	5	4
Compensation of Congressional Printer, clerks, &c.	5	.....	5	5
Compensation of Librarian of Congress, assistants, &c.,	5	.....	5	5
Contingent expenses of Library, purchase of books, &c	5	.....	5	5
Compensation of Superintendent and assistants in Botanic Garden, and improvement of garden	5	.....	5	6
Salaries of Court of Claims	5	.....	5	6
Contingent expenses of Court of Claims	5	.....	5	6
EXECUTIVE.				
Compensation of the President of the United States	5	.....	5	8
Compensation of the Vice-President of the United States	5	.....	5	8
Compensation of the private secretary, &c., of the President	5	.....	5	8
Contingent expenses of the executive office	5	.....	5	8
DEPARTMENT OF STATE.				
Salaries in the office of Secretary of State	5	.....	5	8
Publishing laws	5	.....	5	9
Contingent expenses of Department of State	5	.....	5	9
Diplomatic salaries	5	.....	5	9
TREASURY DEPARTMENT—SALARIES, ETC.				
Office of Secretary of the Treasury	5	.....	5	11
First Comptroller	5	.....	5	12
Second Comptroller	5	.....	5	13
Commissioner of Customs	5	.....	5	14
First Auditor	5	.....	5	14
Second Auditor	5	.....	5	14
Third Auditor	5	.....	5	15
Fourth Auditor	5	.....	5	17
Fifth Auditor	5	.....	5	18
Auditor Post Office Department	5	.....	5	18
Treasurer of the United States	5	.....	5	19
Register of the Treasury	5	.....	5	19
Solicitor of the Treasury	5	.....	5	21
Comptroller of the Currency	5	.....	5	21
Commissioner of Internal Revenue	5	.....	5	21
Light-house Board	5	.....	5	22
Miscellaneous	5	.....	5	22
INDEPENDENT TREASURY.				
Office of Depositary at Baltimore	5	.....	5	23
Assistant Treasurer at Boston	5	.....	5	23
Assistant Treasurer at Charleston, South Carolina	5	.....	5	23

Title.	Vol.	Part.	No.	Page.
Papers, &c.—Continued.				
Office of Depositary at Chicago	5	.....	5	23
Depositary at Cincinnati	5	.....	5	24
Depositary at Louisville	5	.....	5	24
Assistant Treasurer at New Orleans	5	.....	5	24
Assistant Treasurer at New York	5	.....	5	25
Depositary at Olympia, Washington Territory	5	.....	5	25
Assistant Treasurer at Philadelphia	5	.....	5	25
Depositary at Pittsburg	5	.....	5	26
Assistant Treasurer at St. Louis	5	.....	5	27
Assistant Treasurer at San Francisco	5	.....	5	27
Depositary at Santa Fé	5	.....	5	27
Miscellaneous.				
Mint and branches and assay office	5	.....	5	28
Mint at Philadelphia	5	.....	5	28
Branch mint at Carson City, Nevada	5	.....	5	29
Charlotte, North Carolina	5	.....	5	29
Denver	5	.....	5	29
New Orleans	5	.....	5	30
San Francisco	5	.....	5	30
United States assay office at New York	5	.....	5	31
Territorial governments—Arizona	5	.....	5	32
Colorado	5	.....	5	32
Dakota	5	.....	5	33
Idaho	5	.....	5	33
Montana	5	.....	5	34
New Mexico	5	.....	5	34
Utah	5	.....	5	35
Washington	5	.....	5	35
Wyoming	5	.....	5	35
Internal revenue, expense of assessing, collecting, &c	5	.....	5	36
Inspectors of steam vessels	5	.....	5	44
Life-saving stations	5	.....	5	45
Revenue-cutter service	5	.....	5	45
Loans and currency	5	.....	5	46
DEPARTMENT OF THE INTERIOR—SALARIES, ETC.				
In the office of the Secretary of the Interior	5	.....	5	47
Commissioner of the General Land Office	5	.....	5	47
Indian Office	5	.....	5	48
Pension Office	5	.....	5	49
Patent Office	5	.....	5	50
Bureau of Education	5	.....	5	52
Public Lands.				
Office of surveyor general of Louisiana	5	.....	5	53
Florida	5	.....	5	53
Minnesota	5	.....	5	53
Dakota	5	.....	5	54
Kansas	5	.....	5	55
Colorado	5	.....	5	55
New Mexico	5	.....	5	55
Arizona	5	.....	5	56
Idaho	5	.....	5	56
Nevada	5	.....	5	56
Oregon	5	.....	5	57
Washington	5	.....	5	57
Nebraska and Iowa	5	.....	5	57
Montana	5	.....	5	58
Utah	5	.....	5	59

Title.	Vol.	Part.	No.	Page.
Papers, &c.—Continued.				
Collecting revenue for public lands	5	.....	5	59
Miscellaneous.				
Metropolitan police	5	.....	5	63
Jail in District of Columbia	5	.....	5	64
Government Hospital for Insane	5	.....	5	65
Columbia Hospital for Women	5	.....	5	65
Columbia Institution for Deaf and Dumb	5	.....	5	65
Smithsonian Institution	5	.....	5	65
WAR DEPARTMENT—SALARIES, ETC.				
In office of Secretary of War	5	.....	5	65
Adjutant General	5	.....	5	66
Inspector of Military Academy	5	.....	5	67
Bureau of Military Justice	5	.....	5	67
Signal Office	5	.....	5	67
Quartermaster General	5	.....	5	67
Commissary General	5	.....	5	68
Surgeon General	5	.....	5	69
Paymaster General	5	.....	5	69
Chief Engineer	5	.....	5	70
Chief of Ordnance	5	.....	5	71
Salaries and contingent expenses of the Northwest Executive Building	5	.....	5	71
Salaries and contingent expenses of the building corner Seventeenth and F streets	5	.....	5	71
Salaries and contingent expenses of the building corner Fifteenth and F streets	5	.....	5	72
Public Buildings and Grounds	5	.....	5	73
NAVY DEPARTMENT—SALARIES, ETC.				
In the office of Secretary of the Navy	5	.....	5	73
Bureau of Yards and Docks	5	.....	5	74
Equipment and Recruiting	5	.....	5	74
Navigation	5	.....	5	75
Ordnance	5	.....	5	75
Construction and Repair	5	.....	5	75
Steam Engineering	5	.....	5	76
Provision and Clothing	5	.....	5	76
Medicine and Surgery	5	.....	5	76
Southwest Executive Building	5	.....	5	76
DEPARTMENT OF AGRICULTURE—SALARIES, ETC.				
In office of Commissioner of Agriculture	5	.....	5	77
POST OFFICE DEPARTMENT—SALARIES, ETC.				
In office of Postmaster General	5	.....	5	79
JUDICIAL- SALARIES, ETC.				
In office of Attorney General	5	.....	5	82
Justices of the Supreme Court of the United States	5	.....	5	82
Forty-six district judges of the United States	5	.....	5	83
Judges of the courts in District of Columbia	5	.....	5	84
United States district attorneys	5	.....	5	84
United States marshalls	5	.....	5	85
Expenses of United State courts	5	.....	5	87

Title.	Vol.	Part.	No.	Page.
Papers, &c.—Continued.				
MILITARY ESTABLISHMENT.				
	5	.....	5	90
Expenses of the office of the General of the Army.....	5	.....	5	90
Expenses of the office of the Adjutant General	5	.....	5	90
Signal Service	5	.....	5	91
Pay Department	5	.....	5	93
Detailed estimates for pay of the Army.....	5	.....	5	97
Signal Corps.....	5	.....	5	98
Engineer Corps	5	.....	5	98
Ordnance Department...	5	.....	5	99
Ten regiments cavalry...	5	.....	5	100
Five regiments artillery .				
Twenty-five regiments in-	5	.....	5	101
fantry	5	.....	5	103
Indian scouts				
Unattached officers of in-	5	.....	5	103
fantry	5	.....	5	103
One band	5	.....	5	104
Miscellaneous				
Officers of the Military	5	.....	5	104
Academy.....	5	.....	5	106
Recapitulation	5	.....	5	107
Subsistence Department.				
Quartermaster's Depart-	5	.....	5	109
ment	5	.....	5	111
Medical Department.....	5	.....	5	112
Engineer Department ...				
Current and ordinary ex-				
penses of the Military	5	.....	5	113
Academy.....				
NAVAL ESTABLISHMENT.				
	5	.....	5	120
General service of the Navy.....	5	.....	5	121
Bureau of Yards and Docks	5	.....	5	124
Bureau of Equipment and Recruiting	5	.....	5	126
Navigation.....	5	.....	5	127
Ordnance	4	.....	5	128
Construction and Repair.....	5	.....	5	130
Steam Engineering.....	5	.....	5	131
Provisions and Clothing.....	5	.....	5	133
Medicine and Surgery.....	5	.....	5	136
Naval Academy.....	5	.....	5	139
Marine Corps.....				
INDIAN AFFAIRS.				
Current and contingent expenses of Indian affairs.....	5	.....	5	144
Fulfilling treaties with various Indian tribes.....	5	.....	5	147
Incidental expenses of the Indian service.....	5	.....	5	174
Transportation and delivery of annuities.....	5	.....	5	176
Miscellaneous.....	5	.....	5	177
Interest on trust stocks.....	5	.....	5	179
Recapitulation of estimates for Indian service.....	5	.....	5	182
PENSIONS UNDER THE DEPARTMENT OF THE INTERIOR.				
Army and Navy pensions.....	5	.....	5	186
PUBLIC WORKS UNDER THE TREASURY DEPARTMENT.				
Estimates for public buildings.....	5	.....	5	190
Light-houses, beacons, stations, &c.....	5	.....	5	192

Title.	Vol.	Part.	No.	Page.
Papers, &c.—Continued.				
UNDER WAR DEPARTMENT.				
Armories and arsenals	5	.....	5	197
Fortifications and other works of defense	5	.....	5	201
Improving harbors	5	.....	5	203
Improving rivers	5	.....	5	204
Miscellaneous	5	.....	5	205
Public works around Washington	5	.....	5	206
Under Navy Department.				
Navy yards	5	.....	5	208
Public buildings	5	.....	5	210
Under Department of Agriculture.				
Buildings and grounds	5	.....	5	211
Miscellaneous.				
Details under Congressional Printer	5	.....	5	214
Court of Claims	5	.....	5	218
Department of State	5	.....	5	218
Treasury Department	5	.....	5	219
Light-house establishment	5	.....	5	220
Coast Survey	5	.....	5	221
Department of the Interior	5	.....	5	222
Post Office Department	5	.....	5	228
PERMANENT APPROPRIATIONS.				
Specific appropriations under Treasury Department	5	.....	5	232
War Department	5	.....	5	232
Interior Department	5	.....	5	232
Post Office Department	5	.....	5	232
Indefinite appropriations under Department of State	5	.....	5	233
Treasury Department	5	.....	5	233
Interior Department	5	.....	5	236
War Department	5	.....	5	237
Recapitulation of the whole	5	.....	5	240
Appendix A, Government Hospital for the Insane	5	.....	5	247
B, same subject	5	.....	5	248
C, Smithsonian Institution	5	.....	5	252
D, salaries of United States attorneys	5	.....	5	254
E, War Department	5	.....	5	255
F, Navy Department	5	.....	5	258
G, United States Marine Corps	5	.....	5	260
H, Indian Affairs	5	.....	5	261
I, Indian Affairs	5	.....	5	261
K, Indian Affairs	5	.....	5	262
L, Coast Survey	5	.....	5	262
Estimates in detail	5	.....	5	264
For index in detail of estimates, see	5	.....	5	273
Estimates of appropriations for Post Office Department. Letter from the Postmaster General transmitting	5	.....	13	
Estimates. Letter from the Secretary of the Treasury relative to errors in book of	6	.....	57	
Estimate of appropriations for deficiencies in Treasury Department. Letter from the Secretary of the Treasury transmitting	6	.....	65	
Estimates omitted for 1870–'71. Letter from the Secretary of the Treasury transmitting	6	.....	70	

Title.	Vol.	Part.	No.	Page.
Estimates of appropriation for deficiencies in War Department. Letter from the Secretary of War transmitting...	6	.....	86	
Estimates of appropriations for War Department. Letter from the Secretary of War transmitting.....	6	.....	80	
Estimates of appropriations for certain tribes of Indians. Letter from the Secretary of the Interior transmitting...	6	.....	67	
Estimates. Letter from the Secretary of the Interior transmitting, for survey of Indian reserves.....	6	.....	53	
Estimates. Letter from Secretary of the Interior transmitmitting, of appropriation required to replace archives of land office at Topeka, Kansas.....	6	.....	50	
Estimates. Letter from Secretary of the Interior transmitting, of appropriation for survey of the public lands within the Union Pacific Railroad grant	11	.....	230	
F.				
Farragut, Admiral, questioned letter of. Letter from the Secretary of the Navy relative to	7	.....	184	
Fees, of harbor-masters. Letter from the Secretary of the Treasury relative to	7	.....	169	
Fines and deductions, Post Office Department. Letter from the Postmaster General, statement of	12	.....	289	
Fines and forfeitures to revenue officers. Letter from the Secretary of the Treasury relative to abolition of	12	.....	283	
Fisheries in British waters. Message from the President relative to.....	11	.....	239	
Foreign commodities susceptible of production in this country. Letter from the Commissioner of Agriculture relative to.....	6	.....	107	
Fort Porter, city of Buffalo, New York. Letter from the Secretary of War relative to improvement of grounds of.	11	.....	256	
Fort Kearny, reservation at. Letter from the Secretary of War informing the House that it is no longer required	7	.....	194	
Fortifications. Letter from the Secretary of War transmitting statement of amount appropriated up to present time for, &c.....	11	.....	243	
Fortifications, marine. Letter from the Secretary of War relative to the Ryan-Hitchcock mode of.....	5	.....	17	
Fortress Monroe, artillery school at. Letter from the Secretary of War transmitting papers relative to.....	6	.....	49	
Freedmen's Bureau and Abandoned Lands. Letter of the Superintendent of the, relative to amount expended in the execution of said office.....	6	.....	142	
Fry, Thomas W., jr. Letter from the Secretary of War relative to claim of.....	12	.....	287	
G.				
Georgia. Letter from the General of the Army relative to certain officers of the army acting in the legislature of the State of, as a committee of election	6	.....	82	
Georgia. Letter from the Secretary of War transmitting copies of General Terry's reports on	12	.....	288	
Greene, Charles L., passed assistant surgeon in the Navy. Message from the President transmitting the charges, findings, and sentence in case of.....	5	.....	30	
Guptill, Levi C. Letter from the Secretaty of War transmitting copy of deed executed by, to the United States.	11	.....	248	
H.				
Hallett's Point. Letter from the Secretary of War relative to cost of cutting channel through	6	.....	66	

Title.	Vol.	Part.	No.	Page.
Harbor-masters' fees. Letter from the Secretary of the Treasury relative to	7	.....	169	
Harbors. Letter from the Secretary of War submitting report of Chief of Engineers relative to harbor at Plymouth	5	.....	18	
Harbors. Letter from the Secretary of War transmitting report of Chief of Engineers upon the harbor at Oswego	5	.....	20	
Harbors. Letter from the Secretary of War relative to impediments in rivers and, in Massachusetts	5	.....	25	
Harbors. Letter from the Secretary of War relative to harbor at Port Washington, Wisconsin	5	.....	28	
Harbors. Letter from the Secretary of War transmitting report of Chief of Engineers upon New Haven Harbor	5	.....	41	
Harbors. Letter from the Secretary of War transmitting report of Chief of Engineers relative to Black Lake Harbor, Michigan	6	.....	88	
Harbors. Letter from the Secretary of War transmitting report of Chief of Engineers relative to harbor at Chicago	6	.....	114	
Harbors. Letter from the Secretary of War transmitting report of Chief of Engineers relative to Michigan City Harbor	6	.....	120	
Harbors. Letter from the Secretary of War relative to a light to mark the pier in certain, of Massachusetts	7	.....	159	
Harbors. Letter from the Secretary of War transmitting report of surveys of the Christiana River at Wilmington, Delaware	11	.....	224	
Harbors. Letter from the Secretary of War transmitting report of Chief of Engineers relative to Oswego Harbor, New York	12	.....	263	
Harbors. Letter from the Secretary of War relative to expenditures on Boston and New York harbors, Delaware breakwater, &c	12	.....	264	
Havre de Grace. Letter from the Postmaster General relative to the abstraction of stamps from the post office at	6	.....	100	
Headquarters, rents of. Letter from the Secretary of War transmitting statements relative to	11	.....	247	
Headquarters. Letter from the Secretary of War transmitting statement of expenses of	12	.....	262	
Hospital, Providence. Letter from the Surgeon General asking an appropriation for transient paupers in	5	.....	10	
Hospital, Providence. Letter from the Surgeon General transmitting report of expenditures for completion of	5	.....	12	
Hospital, marine, at David's Island. Letter from the Secretary of the Treasury asking an appropriation for	6	.....	55	
Hospital service, marine. Letter from the Secretary of the Treasury transmitting bill for reorganization of	6	.....	101	
Hospital, marine. Letter from the Secretary of the Treasury asking an appropriation of $230,000 for current expenses of the	7	.....	196	
Hospital, marine, at Mobile. Letter from the Secretary of the Treasury relative to condition of	11	.....	246	
Hospital, marine. Letter from the Secretary of the Treasury asking an appropriation for maintenance of	12	.....	298	
Hotaling, A. P. Letter from the Secretary of the Interior transmitting report of Commissioner of Indian Affairs relative to claim of	11	.....	218	
House of Correction for Boys. Letter from the Secretary of the Interior transmitting report of Board of Trustees of the	7	.....	149	
Howard, William A. Letter from the Secretary of War transmitting papers relative to claim of	5	.....	21	
Howard University. Transfer of buildings of	12	.....	273	

Title.	Vol.	Part.	No.	Page.
I.				
Illinois, improvement of the harbor of Chicago. Letter from the Secretary of War transmitting report of Chief of Engineers relative to	6	.....	114	
Imprisonment of citizens in military prisons. Message of the President relative to	11	.....	225	
Indemnity funds, China and Japan. Letter from the Secretary of State relative to	6	.....	69	
Indiana. Letter from the Secretary of the Interior transmitting report of the Commissioner of the General Land Office relative to lands in Knox County	6	.....	115	
Indiana. Letter from the Secretary of War relative to harbor of Michigan City	6	.....	120	
Indian service. Letter from the Secretary of the Interior relative to disbursements on account of the	5	.....	14	
Indian. Letter from the Secretary of War relative to the murder of an, by a white settler	5	.....	16	
Indian hostilities in Utah. Letter from the Secretary of War transmitting report of expenses for suppressing	5	.....	44	
Indian reserves, survey of. Letter from the Secretary of the Interior transmitting estimate of appropriations required for	6	.....	53	
Indians. Letter from the Secretary of the Interior submitting estimates of appropriations for Sisseton, Wahpeton, and other tribes of	6	.....	67	
Indians. Letter from the Secretary of the Interior relative to treaty with the Delaware tribe of	6	.....	83	
Indians. Letter from the Secretary of the Interior transmitting copy of letter from the secretary of the Board of Indian Commissioners relative to appropriations for	6	.....	84	
Indians. Letter from the Secretary of the Interior relative to claims for stock stolen from the Delaware tribe of	6	.....	108	
Indian tribes. Letter from the Secretary of the Interior, transmitting letter from the committee of Friends relative to Kiowas, Comanches, and Apache	6	.....	125	
Indians. Letter from the Secretary of the Interior transmitting copy of report of Indian Commission relative to claims of certain tribes of Kansas	6	.....	127	
Indians. Letter from the Secretary of the Interior relative to annuities withheld from certain tribes of	6	.....	130	
Indian service in Montana. Letter from the Secretary of the Interior recommending an appropriation to pay an outstanding indebtedness for	6	.....	137	
Indians. Letter from the Secretary of the Interior recommending an appropriation to pay certain approved vouchers on account of Indian service in the Sioux Indian district	6	.....	138	
Indian affairs in Oregon. Letter from the Commissioner of Indian Affairs relative to	6	.....	146	
Indian service. Letter from the Secretary of the Interior recommending an appropriation to pay certain claims for, that have been allowed	7	.....	148	
Indian service. Letter from the Secretary of the Interior recommending an appropriation to pay outstanding indebtedness on account of, at Fort Berthold agency	7	.....	150	
Indians. Letter from the Secretary of the Interior transmitting accounts of John E. Tappan for goods given to the Kiowa	7	.....	151	
Indians. Letter from the Secretary of the Interior recommending an appropriation to pay a debt due S. E. Ward for goods furnished to, at Fort Laramie	7	.....	152	
Indians. Letter from the Secretary of the Interior transmitting report of commissioners appointed to examine the claims of the Pottawatomie	7	.....	154	
Indians. Letter from the Acting Commissioner of Indian Affairs relative to number of, in each of the various tribes named in book of estimates	7	.....	158	

Title.	Vol.	Part.	No.	Page.
Indians. Letter from the Secretary of the Interior relative to an appropriation for purchase of mills, &c., for the Flathead	7	.....	165	
Indians. Letter from the Secretary of the Interior relative to the encroachment of white settlers upon the lands of the Osage, in Kansas	7	.....	179	
Indians. Letter from the Secretary of the Interior relative to the late expedition against the Piegan	7	.....	185	
Indians. Letter from the Secretary of War relative to the late expedition against the Piegan	7	.....	197	
Indians. Letter from the Secretary of the Interior asking an appropriation to carry out treaty stipulations with Delaware	7	.....	202	
Indians. Letter from the Secretary of the Interior relative to stray bands of Pottawatomie and Winnebago, in Wisconsin	11	.....	216	
Indians, loyal, and freedmen of the Creek Nation of. Letter from the Secretary of the Interior asking an appropriation for payment of losses of soldiers who enlisted in the federal Army, and	11	.....	217	
Indians. Message from the President relative to difficulties with various tribes of	11	.....	240	
Indians. Letter from the Secretary of the Interior relative to the efforts made by the Government to educate and civilize the	12	.....	260	
Indians. Letter from the Secretary of the Interior asking an appropriation of $250,000 for purchase of subsistence for certain tribes of	12	.....	261	
Indians. Secretary of War communicates in answer to resolution of the House of March 3, 1870, relative to the late expedition against the Piegan	12	.....	269	
Indians. The Secretary of the Interior transmits a letter from the Commissioner of Indian Affairs relative to an appropriation in aid of the, of central superintendency	12	.....	284	
Indians, Black Beaver. The Secretary of War communicates relative to claim of	12	.....	290	
Indians. Secretary of the Interior transmits estimates for an appropriation to defray expenses of delegations of, visiting Washington	12	.....	291	
Indians. Secretary of the Interior asks an appropriation to pay Upper and Lower bands of Sioux, according to treaty June 9, 1858	12	.....	297	
Indians. Secretary of the Interior asks for an appropriation for removal of the Kaw from Kansas to the Indian Territory	12	.....	303	
Indians. Secretary of the Interior transmits report of Commissioner of Indian Affairs relative to pay of Indian interpreters	6	.....	117	
Indians. Secretary of the Interior recommends an appropriation of $100,000 to pay certain Indian depredation claims	12	.....	311	
Interior. Annual report of the Secretary of the	3	3	1	1
Papers accompanying the above.				
Annual report of the Commissioner of the General Land Office	3	3	1	27
Annual report of the Commissioner of Pensions	3	3	1	407
Annual report of the Commissioner of Indian Affairs	.....	3	1	444
Annual report of the Columbia Institution for the Deaf and Dumb	3	3	1	1062
Annual report of the Board of Visitors and Superintendent of Construction of the Government Hospital for the Insane, year 1869	3	3	1	1096
Annual report of the Metropolitan Police	3	3	1	1117
Annual report of the Architect of the Capitol Extension	3	3	1	1137

Title.	Vol.	Part.	No.	Page.
Papers, &c.—Continued.				
Annual report of the Warden of the United States jail	3	3	1	1145
Annual report of the Board of Trustees of the House of Correction	3	3	1	1151
Annual report of the Directors of the Columbia Hospital.	3	3	1	1151
Interior, Secretary of the, transmits account of S. Seymour of expenses of making survey for a bridge across the Potomac	5	.....	19	
Interior, Secretary of the, transmits letter from Commissioner of Indian Affairs, estimate of appropriations for surveying Indian reserves	6	.....	53	
Interior, Secretary of the, transmits statement of disbursements for Indian service	5	.....	14	
Interior, Secretary of the, submits estimates of appropriations for Sisseton, Wahpeton, and Santee Sioux Indians at Lac Traverse and Devil's Lake, Dakota	6	.....	67	
Interior, Secretary of the, communicates in answer to resolution of the House of 17th instant, relative to report of special Indian Commission of the treaty with Delaware Indians	6	.....	83	
Interior, Secretary of the, transmits copy of letter from the secretary of the Board of Indian Commissioners relative to appropriations for Indians	6	.....	84	
Interior, Secretary of the, transmits abstract of report of the United States Indian agent upon claims for stock stolen from Delaware Indians	6	.....	108	
Interior, Secretary of the, transmits report of the Commissioner of the General Land Office relative to quantity of public lands in Knox County, Indiana	6	.....	115	
Interior, Secretary of the, transmits copy of report of Commissioner of Indian Affairs relative to deficiencies in appropriations for pay of Indian interpreters	6	.....	117	
Interior, Secretary of the, transmits letter from the executive committee of Friends on Indian Affairs	6	.....	125	
Interior, Secretary of the, transmits report of commissioners appointed under treaty of 23d February, 1867, with Senecas, &c., to investigate claims	6	.....	127	
Interior, Secretary of the, communicates in answer to resolution of the House of 3d February, relative to annuities withheld from Indians	6	.....	130	
Interior, Secretary of the, communicates in answer to resolution of the House calling for report of the chief engineer of Union Pacific Railroad	6	.....	132	
Interior, Secretary of the, recommends an appropriation to pay an outstanding indebtedness on account of the Indian service in Montana	6	.....	137	
Interior, Secretary of the, recommends an appropriation to pay vouchers approved by General Harney on account of Indian service in Sioux Indian district	6	.....	138	
Interior, Secretary of the, communicates in answer to resolution of the House of February 9, 1870, with copy of Vincent Colyer's report on Alaska	7	.....	144	
Interior, Secretary of the, recommends an appropriation to pay certain claims that have been allowed on account of Indian service	7	.....	148	
Interior, Secretary of the, transmits copies of two letters from president of Board of Trustees of House of Correction for Boys asking an appropriation	7	.....	149	
Interior, Secretary of the, recommends an appropriation to pay outstanding indebtedness on account of the Indian service at Fort Berthold Indian agency	7	.....	150	
Interior, Secretary of the, transmits accounts of John E. Tappan for goods given to Kiowa Indians for delivery of white captives held by them in 1868	7	.....	151	

Title.	Vol.	Part.	No.	Page.
Interior, Secretary of the, recommends an appropriation to pay a debt due S. E. Ward for goods furnished Indians at Fort Laramie	7	.....	152	
Interior, Secretary of the, transmits report of commissioners appointed to examine the claims of the Pottawatomie Indians	7	.....	154	
Interior, Secretary of the, transmits copy of a report on the Rio Hondo claim of Louisiana	.....	.....	157	
Interior, Secretary of the, transmits draught of bill amendatory of the census law	7	.....	161	
Interior, Secretary of the, transmits copy of a letter from Commissioner of Indian Affairs, with estimate of appropriations for purchase of mills, &c., for Flathead Indians.	7	.....	165	
Interior, Secretary of the, communicates relative to encroachment of white settlers upon Osage Indian lands in Kansas	7	.....	179	
Interior, Secretary of the, communicates in answer to resolution of the House of March 4, 1870, relative to the late expedition against the Piegan Indians	7	.....	185	
Interior, Secretary of the, asks for an appropriation to pay for use of building for Bureau of Education	7	.....	190	
Interior, Secretary of the, communicates relative to act of Congress for the erection of penitentiaries in certain Territories	7	.....	192	
Interior, Secretary of the, asks for an appropriation to carry out treaty stipulations with Delaware Indians	7	.....	202	
Interior, Secretary of the, transmits copy of a letter from Commissioner of Indian Affairs relative to the removal of stray bands of Pottawatomie and Winnebago Indians in Wisconsin	11	.....	216	
Interior, Secretary of the, transmits report of Commissioner of Indian Affairs relative to the claim of A. P. Hotaling	11	.....	218	
Interior, Secretary of the, transmits estimates of appropriations for survey of public lands within the limits of the grant to the Union Pacific Railroad	12	.....	230	
Interior, Secretary of the, submits estimate of appropriations for expenses of surveyor general's office in Wyoming Territory	12	.....	259	
Interior, Secretary of the, communicates in answer to resolution of the House of March 24, 1870, relative to efforts to educate and civilize the Indian tribes	12	.....	260	
Interior, Secretary of the, asks an appropriation for payment of losses sustained by soldiers who enlisted in the federal Army, and loyal refugees and freedmen of the Creek Nation	12	.....	217	
Interior, Secretary of the, incloses copy of letter from Commissioner of Indian Affairs asking an appropriation of $250,000 for purchase of subsistence for the Arapaho, Cheyenne, and other tribes for 1871	12	.....	261	
Interior, Secretary of the, communicates in answer to a resolution of the House calling for information relative to contract with Dempsey & O'Toole	12	.....	278	
Interior, Secretary of the, transmits estimate of appropriations to prosecute the exploration of the Colorado River.	12	.....	280	
Interior, Secretary of the, communicates relative to furnishing circuit judges of the United States courts with sets of Little & Brown's edition of the Statutes at Large	12	.....	282	
Interior, Secretary of the, transmits letter from the Commissioner of Indian Affairs relative to an appropriation to carry on the work of instructing the Indians of the central superintendency	12	.....	284	
Interior, Secretary of the, communicates relative to certain proceeds of internal revenue for erection of penitentiaries in Territories	12	.....	286	

Title.	Vol.	Part.	No.	Page.
Interior, Secretary of the, transmits estimate for an appropriation to defray expenses of delegations of Indians visiting Washington	12	.....	291	
Interior, Secretary of the, communicates in answer to a resolution of the House of May 24, 1870, relative to establishing an Indian reservation in San Diego County, California	12	.....	296	
Interior, Secretary of the, asks for an appropriation to pay the Upper and Lower bands of Sioux Indians according to treaty of June 19, 1858	12	.....	297	
Interior, Secretary of the, recommends an appropriation for ninth census	12	.....	299	
Interior, Secretary of the, communicates relative to the condition of the Interior Department building as to light, ventilation, &c	12	.....	300	
Interior, Secretary of the, asks an appropriation for removal of the Kaw Indians from Kansas to the Indian Territory	12	.....	303	
Interior, Secretary of the, transmits letter from the governor of Wyoming Territory relative to a penitentiary building in said Territory	12	.....	306	
Interior, Secretary of the, transmits estimate of appropriations required to replace archives of land office at Topeka, destroyed by fire	6	.....	50	
Interior, Secretary of the, transmits statement of number of acres of public lands in Virginia and other States	5	.....	29	
Interior, Secretary of the, transmits answer relative to the Atlantic and Pacific Railroad Company	7	.....	195	
Interior, Secretary of the, recommends an appropriation of $100,000 to pay certain Indian depredation claims	13	.....	311	
Internal Revenue. Annual report of the Commissioner of.	5	.....	4	
Internal Revenue. Commissioner of, transmits answer to resolution of the House of 17th January, 1870, with statement of the quantity of fine whiskies produced during the months from September to December, 1868.	6	.....	87	
Internal Revenue. Commissioner of, transmits answer to resolution of the House of 31st January relative to the copy-right of the revenue coupon-book used by distillers.	6	.....	126	
Internal Revenue. Commissioner of, transmits answer to resolution of the House of 26th January relative to distillation of drop beer, &c	6	.....	131	
Internal Revenue. Commissioner of, transmits answer to resolution of the House of March 11 relative to the expediency of abolishing internal taxes	7	.....	214	
Internal Revenue. Commissioner of, transmits answer to resolution of the House of March 1 relative to salaries of internal storekeepers	11	.....	226	
Internal revenue. Secretary of the Treasury transmits answer to resolution of the House of March 21, 1870, with statement of balances due from collectors of, not now in office	12	.....	267	
Internal Revenue. Commissioner of, communicates relative to the Tice meter	12	.....	272	
Internal Revenue. Secretary of the Treasury transmits letter from the Commissioner of, relative to certain spirits distilled under direction of a committee to test spirit meters	11	.....	251	
Internal Revenue. Secretary of the Treasury transmits letter from the Commissioner of, relative to the Tice meter.	11	.....	250	
Internal Revenue. Secretary of the Treasury transmits a report made to the Commissioner of, relative to the collection of direct taxes	13	.....	312	
Interpreters. Secretary of the Interior transmits copy of report of the Commissioner of Indian Affairs relative to deficiencies in appropriations for Indian	6	.....	117	

Title.	Vol.	Part.	No.	Page.
Iowa. Secretary of War transmits copy of deed of land in the State of, executed by Levi C. Guptill, to the United States	11	.....	248	
J.				
Japan. Secretary of the Treasury communicates relative to the $600,000 paid the United States, as indemnity by	6	.....	51	
Japan. Secretary of State communicates relative to same subject	6	.....	77	
Jones, Commodore Thomas Ap C., Secretary of War transmits papers relative to the claim of the estate of	6	.....	58	
K.				
Kansas, land office at Topeka. Secretary of the Interior transmits estimate of appropriation to replace archives of	6	.....	50	
Kansas. Message of the President in answer to resolution of the House of 21st March relative to the movement of troops to	12	.....	270	
Kansas. Secretary of the Interior communicates relative to encroachments of white settlers upon lands of Osage Indians in	7	.....	179	
Kansas. Secretary of the Interior transmits copy of report made by commissioners to investigate claims of Senecas, and other tribes of Indians in	6	.....	127	
Keays, Lieutenant W. J. Secretary of War transmits report of the Judge Advocate General upon the case of	6	.....	105	
Kentucky. Secretary of the Treasury transmits answer to resolution of the House of February 16 relative to the erection of a public building at Paducah	7	.....	178	
Knox, John J. Report of, relative to the revision of the mint and coinage laws	12	.....	307	
L.				
Land Office. Annual report of the Commissioner of the General	3	3	1	
Papers accompanying the above.				
No. 1.—Tabular statement showing the number of acres of public lands surveyed in the following land States and Territories up to June 30, 1868, during the last fiscal year, and the total of the public lands surveyed up to June 30, 1869; also the total area of the public domain remaining unsurveyed within the same	3	3	1	225
No. 2.—Statement of public lands sold, of cash and bounty-land scrip received therefor, number of acres entered under the homestead law of May 20, 1862, of commissions received under sixth section of said act; also of land located with scrip under the agricultural college and mechanic act of July 2, 1862, and commissions received by registers and receivers on the value thereof, and statement of incidental expenses thereon, in the first half year of the fiscal year commencing July 1, 1868, and ending June 30, 1869	3	3	1	226
No. 3.—Statement of public lands sold, of cash and bounty-land scrip received therefor, number of acres entered under the homestead law of May 20, 1862, of commissions received under sixth section of said act; also of land located with scrip under the agricultural college and mechanic act of July 2, 1862, and commissions received by registers and receivers on the value thereof, and statement of incidental expenses thereon in the second half of the fiscal year commencing July 1, 1868, and ending June 30, 1869	3	3	1	233

Title.	Vol.	Part.	No.	Page.
Papers, &c.—Continued.				
No. 4.—Summary for the fiscal year ending June 30, 1869, showing the number of acres disposed of for cash, with bounty land scrip, by entry under the homestead laws of May 20, 1862, March 21, 1864, and June 21, 1866, with aggregate of $5 and $10 homestead payments and homestead commissions; also locations with agricultural college and mechanic scrip, under act of July 2, 1862.....	3	3	1	242
No. 5.—Statement exhibiting the quantity of lands selected for the several States under acts of Congress approved March 2, 1849, September 28, 1850, and March 12, 1860, up to and ending September 30, 1869.....	3	3	1	244
No. 6.—Statement exhibiting the quantity of land approved to the several States under the acts of Congress approved March 2, 1849, September 28, 1850, and March 12, 1860, up to and ending September 30, 1869.....	3	3	1	244
No. 7.—Statement exhibiting the quantity of land patented to the several States under the acts of Congress approved September 28, 1850, and March 12, 1860, and also the quantity certified to the State of Louisiana under act approved March 2, 1849.....	3	3	1	245
No. 8.—Statement showing the condition of the State selections under the act of September 4, 1841, on the 30th day of June, 1869.....	3	3	1	245
No. 9.—Condition of bounty land business under acts of 1847, 1850, 1852, and 1855, showing the issues and locations from the commencement of operations under said acts to June 30, 1869.....	3	3	1	246
No. 10.—Agricultural selections within certain States, and also scrip locations under agricultural and mechanic act of July 2, 1862, and supplements of April 14, 1864, and July 23, 1866.....	3	3	1	246
No. 11.—Statement exhibiting land concessions by acts of Congress to States and corporations, for railroad and military wagon-road purposes, from the year 1850 to June 30, 1869.....	3	3	1	247
No. 12.—Statement exhibiting land concessions by acts of Congress to States for canal purposes from the year 1827 to June 30, 1869.....	3	3	1	253
No. 13.—Estimates of appropriations required for the office of the Commissioner of the General Land Office for the fiscal year ending June 30, 1871.....	3	3	1	254
No. 14.—Estimate of appropriations required to meet expenses of collecting the revenue from the sales of public lands in the several States and Territories for the fiscal year ending June 30, 1871.....	3	3	1	256
No. 15.—Estimates of appropriations required for the Surveying Department for the fiscal year ending June 30, 1871.	3	3	1	257
No. 16.—Estimates of appropriations required for surveying the public lands for the fiscal year ending June 30, 1871.	3	3	1	260
No. 17.—Estimates of appropriations required for the Surveying Department, to supply deficiency for the fiscal year ending June 30, 1870.....	3	3	1	262
No. 18.—Reports of Surveyors General, from A to O, inclusive.....	3	3	1	263
No. 19.—Statement of confirmed Indian pueblo grants and private land claims in New Mexico.....	3	3	1	398
No. 20.—Statement showing the area of the several States and Territories containing public lands, the quantity of land disposed of by sale or otherwise in each up to the 30th June, 1869, and the quantity of land which remained unsold and unappropriated at that date in the several States and Territories.....	3	3	1	400
No. 21.—Historical and statistical table of the United States of North America.....	3	3	1	404

Title.	Vol.	Part.	No.	Page.
Land Office, Topeka, Kansas. Secretary of the Interior transmits estimate of appropriation to replace archives of, destroyed by fire	6	.....	50	
Land. Secretary of War transmits copy of deed of certain, executed by Levi C. Guptill, of Iowa, to the United States.	11	.....	248	
Lands in Virginia and other States. Secretary of the Interior transmits statement of quantity of, in answer to resolution of the House	5	.....	29	
Lands. Commissioner of the General Land Office transmits answer to resolution of the House of December 15, 1869, relative to the acceptance of certain, granted to Michigan, for railroad purposes, in 1856	5	.....	33	
Lands. Secretary of the Interior transmits report of Commissioner of the General Land Office relative to quantity of public, in Knox County, Indiana	6	.....	115	
Lands. Secretary of the Interior transmits estimates of appropriations for survey of public, within limits of Union Pacific Railroad grant	11	.....	230	
Laws. Secretary of State asks for an appropriation for publishing the, of the United States	5	.....	8	
Laws. Secretary of the Interior communicates, relative to furnishing circuit judges of the United States courts with sets of Little & Brown's Statutes at Large	12	.....	282	
Letter-carrier system. Postmaster General transmits answer to resolution of the House of March 21 relative to	11	.....	233	
Light-house on Lake Ontario. Secretary of the Treasury transmits answer to resolution of the House of March 16 relative to the necessity of	7	.....	209	
Lincoln, Abraham, Tributes of the Nations to. Message of the President relative to	6	.....	128	
Lisbon. Secretary of the Navy transmits answer to resolution of the House relative to rates of government exchange at	12	.....	304	
Little & Brown. Secretary of the Interior communicates relative to furnishing sets of edition of Statutes at Large by, to circuit judges of the courts of the United States	12	.....	282	
London, International Exhibition in. Secretary of State communicates relative to	7	.....	181	
Louisiana. Secretary of the Interior transmits copy of report on the Rio Hondo claims of	7	.....	157	
M.				
Mails. Postmaster General communicates relative to the rejection of all bids made by Bryan Tyson for transportation of the	12	.....	293	
Mails. Postmaster General transmits answer to resolution of the House of January 20 relative to railroad contracts for transportation of the	6	.....	90	
Maine. Supervising Architect of the Treasury communicates relative to an appropriation for grading, &c., around custom-house at Wiscasset	7	.....	193	
Maine. Secretary of the Treasury asks for an appropriation to purchase additional land for the custom-house at Castine	6	.....	103	
Maryland. Secretary of the Treasury communicates relative to the establishment of the office of assistant treasurer at Baltimore	11	.....	219	
Maryland. Secretary of War transmits answer to resolution of the House of December 9 relative to condition of Patapsco River	5	.....	47	
Massachusetts. Secretary of War submits report of Chief of Engineers relative to Plymouth Harbor	5	.....	18	

Title.	Vol.	Part.	No.	Page.
Massachusetts. Secretary of War transmits answer to resolution of the House of December 10 relative to obstructions of rivers and harbors in	5	.....	25	
Massachusetts. Secretary of War transmits report upon condition of breakwater at Hyannis	6	.....	63	
Massachusetts. Secretary of the Treasury transmits answer to resolution of the House of February 17 relative to a light to make the pier at Plymouth, &c	7	.....	159	
Meteorological observations. Secretary of War transmits estimates of appropriations required to carry into effect the law authorizing	7	.....	162	
Meter. Secretary of the Treasury transmits communication from Commissioner of Internal Revenue relative to the Tice	11	.....	250	
Meters. Secretary of the Treasury transmits letter from Commissioner of Internal Revenue relative to certain spirits distilled under direction of a committee to make certain tests of	11	.....	251	
Meter. Commissioner of Internal Revenue communicates relative to the Tice	12	.....	272	
Michigan. Secretary of War transmits answer to resolution of the House of January 31, with report of Chief of Engineers of survey of port of Sheboygan	6	.....	134	
Michigan. Secretary of War transmits answer to resolution of the House of January 17, with report of Chief of Engineers relative to harbor of Black Lake	6	.....	88	
Michigan. Secretary of the Treasury transmits answer to resolution of the House of February 11, with report of General W. F. Reynolds, Corps of Engineers, relative to range-lights in St. Clair River	7	.....	182	
Military commission. Secretary of War transmits answer to resolution of the House of March 30, with copy of proceedings and finding of a, held at Little Rock, Arkansas, in 1864	11	.....	244	
Military custody. Message of the President in answer to resolution of the House of December 20, 1869, relative to citizens held in	11	.....	225	
Military posts in Texas. Secretary of War transmits reports relative to permanent	11	.....	228	
Militia. Secretary of War transmits answer to request of, Committee on Military Affairs relative to the, of Montana Territory	6	.....	121	
Militia. Secretary of War transmits answer to Committee on Military Affairs relative to the, of the State of Missouri	6	.....	122	
Mines and Mining. Report of Rossiter W. Raymond on, west of the Rocky Mountains	10	.....	207	
Mint at Charlotte, North Carolina. Secretary of the Treasury asks for an appropriation to supply a deficiency for	6	.....	98	
Mints, assay offices, and coinage. Report of John J. Knox relative to the revision of the laws relating to	12	.....	307	
Missouri. Secretary of War transmits answer to resolution of the House of April 1, 1869, relative to claims of persons claiming residence in fourth congressional district of	5	.....	23	
Missouri. Secretary of War transmits answer to Committee on Military Affairs relative to militia of the State of	6	.....	122	
Money-order Bureau. Postmaster General transmits answer to a resolution of House of December 7 relative to payment of pensions through the	7	.....	199	
Montana. Secretary of War transmits answer to request of the Committee on Military Affairs relative to militia force raised by the governor of the Territory of	6	.....	121	
Montana. Secretary of the Interior recommends an appropriation to pay an outstanding indebtedness on account of Indian service in the Territory of	6	.....	137	

Title.	Vol.	Part.	No.	Page
Murder of an Indian. Secretary of War transmits report of commanding officer at Camp Gaston, California, relative to the unprovoked, by a white settler	5	.....	16	
N.				
Navigation and collection of customs. Secretary of the Treasury transmits draught of bill to remedy embarrassments in enforcing the laws relating to	12	.....	292	
Navy. Annual report of the Secretary of the	2	1	1	1
Papers accompanying the above.				
Operations of the fleets	2	1	1	35
Reports of Bureaus	2	1	1	40
Report of Bureau of Equipment and Recruiting	2	1	1	40
Report of Bureau of Navigation	2	1	1	49
Report of Bureau of Ordnance	2	1	1	67
Report of Bureau of Yards and Docks	2	1	1	72
Report of Bureau of Construction and Repair	2	1	1	87
Report of Bureau of Steam Engineering	2	1	1	102
Estimates for Bureau of Steam Engineering	2	1	1	105
Report of Bureau of Provisions and Clothing	2	1	1	107
Estimates of Bureau of Provisions and Clothing	2	1	1	108
Report of Bureau of Medicine and Surgery	2	1	1	112
Estimates for Bureau of Medicine and Surgery	2	1	1	118
Report of Commandant of Marine Corps	2	1	1	123
Estimates of appropriations required for service of the office of Secretary of the	2	1	1	128
Report of Superintendent of the Naval Academy	2	1	1	131
Estimates for the Naval Academy	2	1	1	134
Report of the Board of Visitors for 1869	2	1	1	136
Report of Board of Officers on Steam Machinery Afloat	2	1	1	143
Report of the Naval Board on Yards and Docks	2	1	1	211
Report of Board of Naval Officers on Navy Pensions	2	1	1	233
Report on an Interoceanic Canal	2	1	1	237
Report (supplemental) on the Capture of New Orleans	2	1	1	238
Navy. Secretary of the, transmits answer to a resolution of the House of the 16th instant, calling for the report of a Board of Admirals	5	.....	37	
Navy. Secretary of the, communicates relative to contracts with Mr. Abecassis	5	.....	48	
Navy. Secretary of the, communicates relative to the proceedings before a board of naval officers on the subject of line and staff rank in the	6	.....	52	
Navy. Secretary of the, communicates relative to pay and emoluments of officers of the	6	.....	91	
Navy. Secretary of the, transmits list of vessels of the United States, the names of which have been changed since March 4, 1869	6	.....	92	
Navy. Secretary of the, transmits statement of number of men employed in the several navy yards on first of March, July, September, and December, 1869	6	.....	96	
Navy. Secretary of the, transmits report of desks, and number of clerks in his Department	6	.....	97	
Navy. Secretary of the, transmits record of proceedings of the board of officers appointed to take into consideration the subject of assimilated rank in the	6	.....	99	
Navy. Secretary of the, communicates, in answer to a resolution of the House calling for report of Rear Admiral Davison on interoceanic communication at the American Isthmus	6	.....	113	
Navy. Secretary of the, transmits answer to resolution of the House calling for correspondence with Admiral Farragut relative to staff rank in the	7	.....	171	

Title.	Vol.	Part.	No.	Page.
Navy. Secretary of the, transmits answer to resolution of the House relative to removal of the navy yard at Brooklyn, New York	7	.....	172	
Navy. Secretary of the, transmits answer to resolution of the House of the 17th of January, calling for names of defaulting paymasters	7	.....	174	
Navy. Secretary of the, transmits answer to resolution of the House of the 16th of March, calling for papers relative to questioned letter of Admiral Farragut	7	.....	184	
Navy. Secretary of the, transmits answer to resolution of the House of the 2d of March, relative to the sinking of the Oneida	7	.....	187	
Navy. Secretary of the, transmits answer to resolution of the House of the 14th of March, relative to officers and vessels of the	7	.....	203	
Navy. Secretary of the, transmits answer to resolution of the House of the 2d of March, relative to the loss of the Oneida	11	.....	236	
Navy. Secretary of the, transmits answer to resolution of the House of the 12th of February relative to number of officers on active list, number of vessels, whole number of non-commissioned officers and seamen in the	12	.....	277	
Navy. Secretary of the, transmits answer to resolution of the House of June 4 relative to rates of government exchange at Lisbon	12	.....	304	
Navy. Secretary of the, transmits copy of the proceedings of the naval court-martial in the case of Commander J. H. Upshur	13	.....	308	
New York. Secretary of War transmits report of Chief of Engineers relative to harbor of Oswego	5	.....	20	
New York. Secretary of the Navy transmits answer to resolution of the House of Representatives relative to the removal of the navy yard at Brooklyn	7	.....	172	
New York. Secretary of the Treasury transmits answer to resolution of the House of Representatives relative to persons employed in the cities of Brooklyn or, to aid in the collection of internal revenue	7	.....	208	
New York. Secretary of War communicates relative to improvement of the grounds owned by the United States in Buffalo, known as Fort Porter	11	.....	256	
New York. Secretary of War transmits report of Chief of Engineers upon improvements of harbor of Oswego	12	.....	263	
New York. Secretary of War transmits answer to resolution of the House of Representatives relative to expenditures on harbors of, &c	12	.....	264	
New York. Secretary of the Treasury transmits answer to resolution of the House of Representatives relative to sale of Battery, New York City	12	.....	294	
New Jersey. Secretary of War transmits copies of all papers on file relative to the jurisdiction of the United States over Sandy Hook	7	.....	166	
North Carolina. Secretary of the Treasury asks an appropriation to supply deficiency for mint at Charlotte	6	.....	98	
O.				
Oath in Texas. Secretary of War transmits certain papers from citizens requiring all persons to take the, required by the State constitution	6	.....	60	
Oneida. Secretary of the Navy transmits answer to resolution of the House of Representatives relative to the sinking of the United States steamer	7	.....	187	
Oneida. Secretary of the Navy transmits further reply to same, with copies of all official reports received relating thereto	11	.....	236	

Title.	Vol.	Part.	No.	Page.
Ordnance Department. Secretary of War transmits letter from Chief of Ordnance relative to larger clerical force..	6	.....	106	
Oregon. Commissioner of Indian Affairs transmits answer to House of Representatives resolution of February 15th relative to report of Superintendent of Indian Affairs in.	7	.....	146	
P.				
Paris International Monetary Conference. Message of the President of the United States transmitting report of Samuel B. Ruggles, a delegate to the.....	12	.....	266	
Passengers in steamships and other vessels. Secretary of State transmits report, in compliance with law, relative to.....	11	.....	235	
Patent Office. Commissioner of Patents transmits statement of receipts and expenditures in the, for the year 1869	5	.....	7	
Patents. Commissioner of, annual report of the	9	.....	102	
Paymaster General. Annual report of the.....	2	2	1	426
Paymaster General's Office. Secretary of War communicates relative to insufficiency of appropriation for rent of.	7	.....	204	
Paymasters in the Navy. Secretary of the Navy transmits answer to resolution of House of Representatives asking names of defaulting.....	7	.....	174	
Penitentiaries. Secretary of the Interior communicates relative to act of Congress setting aside internal revenue for the erection of, in certain Territories	7	.....	192	
Penitentiaries. Secretary of the Interior transmits letter from governor of Wyoming Territory relative to, in said Territory.....	12	.....	306	
Penitentiaries. Secretary of the Interior communicates relative to the erection of, in the Territories	12	.....	286	
Pensions. Annual report of the Commissioner of	3	3	1	407
Papers accompanying the above.				
A.—Statement of the number and yearly amount of original applications, and for increase of Army pensions, admitted in each State and Territory for the year ending June 30, 1869.....	3	3	1	436
B.—Statement of the amount paid for Army pensions at the agencies in the several States and Territories for the year ending June 30, 1869	3	3	1	436
C.—Statement of the amount of funds in the hands of agents for paying Army pensions on the 30th day of June, 1869.....	3	3	1	437
D.—Statement of the number and yearly amount of Army pensions on the rolls of the several States and Territories on the 30th day of June, 1869.....	3	3	1	437
E.—Statement of the number and yearly amount of original applications and for increase of Navy pensions admitted in each State and Territory for the year ending June 30, 1869.....	3	3	1	438
F.—Statement of the amount paid for Navy pensions at the agencies in the several States and Territories for the year ending June 30, 1869.....	3	3	1	439
G.—Statement of the amount of funds in the hands of agents for paying Navy pensions on the 30th day of June, 1869.....	3	3	1	440
H.—Statement of the number and yearly amount of Navy pensioners on the rolls of each State and Territory on the 30th day of June, 1869	3	3	1	440
I.—Abstract of the reports of examiners under the act of July 14, 1862, and supplemental ones, on the Army branch of pensioners, during the fiscal year ending June 30, 1869	3	3	1	441

Title.	Vol.	Part.	No.	Page.
Papers, &c.—Continued.				
J.—Abstract of the reports of examiners of pensions under acts passed prior to July 14, 1862, and under the thirteenth section of the act of July 27, 1868	3	3	1	442
Pensions. Postmaster General transmits answer to resolution of House of December 7, relative to payment of, through Money-order Bureau	7	.....	199	
Pennsylvania volunteers. Secretary of War transmits report of Adjutant General upon the 186th regiment of	6	.....	123	
Pilot-boat A. T. Stewart. Secretary of War transmits answer to a resolution of the House relative to the wreck of the	7	.....	163	
Postmaster General, of the operations of his office. Annual report of the	2	1	1	3
Papers accompanying the above.				
Statement of revenues and expenditures for year 1869–'70.	2	1	1	3
Estimates for 1870–'71:				
Stamps and stamped envelopes for year 1870–'71	2	1	1	4
Free delivery, or carrier system	2	1	1	18
Disposition, &c., of dead letters	2	1	1	18
Postal money-order system	2	1	1	20
Appendix No. 1.—Estimates for expenditures (out of the revenue) for 1870–'71	2	1	1	31
Estimates of expenditures to be provided for from the treasury	2	1	1	31
Appendix No. 2.—Statement exhibiting the receipts and expenditures, under appropriate heads, by quarters, for the fiscal year ended June 30, 1869, compared with the fiscal year ended June 30, 1868	2	1	1	32
Appendix No. 3.—Statement of receipts and disbursements at treasury depositories, &c., year ending June 30, 1869	2	1	1	33
Appendix No. 4.—Depository post offices, September 20, 1869	2	1	1	35
Appendix No. 5.—Estimate of indebtedness of Post Office Department on June 30, 1869, and not yet adjusted	2	1	1	35
Appendix No. 6.—Postage stamps, stamped envelopes, and newspaper wrappers issued during the year 1868–'69	2	1	1	36
Appendix No. 7.—Postage stamps, stamped envelopes, and newspaper wrappers issued during the fiscal year ended June 30, 1869	2	1	1	37
Appendix No. 8.—Statement showing the increase in issue of postage stamps, stamped envelopes, and newspaper wrappers	2	1	1	38
Appendix No. 9.—General statement of postage stamps, stamped envelopes, and newspaper wrappers issued during the fiscal year, and remaining unsold in the hands of postmasters July 1, 1869	2	1	1	38
Appendix No. 10.—Statement of payments under various heads charged to miscellaneous account for the fiscal year ended June 30, 1869	2	1	1	39
Appendix No. 11.—Comparative statement of the disposition of dead letters during the fiscal years 1868 and 1869.	2	1	1	40
Appendix No. 12.—Statement of mail service for contract year ending June 30, 1869	2	1	1	41
A.—Table of mail service for the year ended June 30, 1869, as exhibited by the state of the arrangements at the close of the year	2	1	1	42
B.—Railroad service as in operation on June 30, 1869	2	1	1	44
C.—Steamboat service as in operation on June 30, 1869.	2	1	1	61
D.—Table showing the increase and decrease in mail transportation and cost during the year ended June 30, 1869	2	1	1	65
E.—Table showing the weights of mails, &c	2	1	1	70
Index to Table E	2	1	1	67

Title.	Vol.	Part.	No.	Page.
Papers, &c.—Continued.				
F.—Table showing the readjustment of the rates of pay per mile on certain railroad routes, based upon returns of the weight of the mails conveyed, the accommodations provided for mails and agents of the department, &c	2	1	1	78
Index to Table F	2	1	1	82
Appendix No. 13.—Circular of instructions. Through mails to California, overland route	2	1	1	83
Appendix No. 14.—Railway post office lines in operation June 30, 1869	2	1	1	84
Appendix No. 15.—Statement showing operations and results of foreign mail service for the year ending June 30, 1869	2	1	1	85
Appendix No. 16.—Convention between the general post office of the United Kingdom of Great Britain and Ireland and the General Post Office of the United States.	2	1	1	86
Appendix No. 17.—Additional article to the regulation of detail and order signed at Paris November 28, 1867, &c.	2	1	1	87
Appendix No. 18.—Amended article to replace Article 16 of detailed regulations for the execution of postal convention, signed at Florence November 8, 1867	2	1	1	87
Appendix No. 19.—Total operations of the appointment office for the year ending June 30, 1869	2	1	1	88
Appendix No. 20.—Table showing increase and decrease of post offices for the year 1869	2	1	1	89
Appendix No. 21.—Convention for further amelioration of postal intercourse between the United States and the Swiss Confederation	2	1	1	89
Appendix No. 22.—Detailed regulations agreed upon between the Post Office Department of the United States and the postal administration of Switzerland	2	1	1	91
Appendix No. 23.—Instructions to postmasters relative to the system of postal money-orders between the United States and Switzerland	2	1	1	93
Appendix No. 24.—Report of the Auditor	2	1	1	97
Papers accompanying the above.				
A.—Statement exhibiting the receipts of the Post Office Department, under the several appropriate heads, by quarters, for the year ending June 30, 1869	2	1	1	102
B.—Statement exhibiting expenditures under their appropriate heads, by quarters, for the year ending June 30, 1869	2	1	1	103
C.—Statement of postal receipts and expenditures of the United States for the year ending June 30, 1869	2	1	1	104
D.—Statement of the operation of the letter-carrier system for the fiscal year ending June 30, 1869	2	1	1	106
E.—Detailed statement under the head of miscellaneous payments made by the Post Office Department for the fiscal year ending June 30, 1869	2	1	1	107
F.—Summary of principal labors	2	1	1	112
G.—Statement showing transactions of the money-order office for the year ending June 30, 1869	2	1	1	115
H.—Statement showing the revenue accruing to money-order department for the fiscal year ending June 30, 1869	2	1	1	116
I.—Statement showing the receipts and expenditures of the money-order department for the fiscal year ending June 30, 1869	2	1	1	116
J.—Amount of letter postage on British mails received in and sent from the United States during the fiscal year ending June 30, 1869	2	1	1	117
K.—Amount of letter postage on North German Union mails received in and sent from the United States during the fiscal year ending June 30, 1869	2	1	1	118
L.—Amount of letter postage collected on French mails				

Title.	Vol.	Part.	No.	Page.
Papers, &c.—Continued.				
received in and sent from the United States during the fiscal year ending June 30, 1869	2	1	1	119
M.—Amount of letter postage on Belgian mails received in and sent from the United States during the fiscal year ending June 30, 1869	2	1	1	120
N.—Amount of letter postage on the Netherlands mails received in and sent from the United States during the fiscal year ending June 30, 1869	2	1	1	121
O.—Amount of letter postage on Switzerland mails received in and sent from the United States during the fiscal year ending June 30, 1869	2	1	1	122
P.—Amount of letter postage on Italian mails received in and sent from the United States during the fiscal year ended June 30, 1869	2	1	1	123
Q.—Number of letters and weight of newspapers, &c., exchanged between the United States and the United Kingdom, in British mails, during the year ended June 30, 1869	2	1	1	123
R.—Number of letters and weight of printed matter (sent) exchanged between the United States and the North German Union during the fiscal year ending June 30, 1869	2	1	1	124
S.—Number of letters and newspapers exchanged between the United States and France during the fiscal year ending June 30, 1869	2	1	1	124
T.—Number of rates of letters and weight of printed matter (sent) exchanged between the United States and Belgium during the fiscal year ended June 30, 1869	2	1	1	124
U.—Number of letters exchanged between the United States and the Netherlands during the fiscal year ending June 30, 1869	2	1	1	125
V.—Number of letters exchanged between the United States and Switzerland during the fiscal year ended June 30, 1869	2	1	1	125
W.—Number of letters exchanged between the United States and Italy during the fiscal year ending June 30, 1869	2	1	1	125
X.—Statement of letters and newspapers, with the several postages, received in and sent from the United States to Panama during the fiscal year ending June 30, 1869	2	1	1	126
Y.—Statement of letters and newspapers, with the several postages, received in and sent from the United States to Mexico during the fiscal year ending June 30, 1869	2	1	1	126
Z.—Statement of letters and newspapers, with the several postages, received in and sent from the United States to Brazil during the year ending June 30, 1869	2	1	1	126
AA.—Statement of letters and newspapers, with the several postages, received in and sent from the United States to Belize, Honduras, during the fiscal year ending June 30, 1869	2	1	1	127
BB.—Statement of letters and newspapers, with the several postages, received in and sent from the United States to the West India islands during the fiscal year ending June 30, 1869	2	1	1	127
CC.—Statement of letters and newspapers, with the several postages, received in and sent from the United States to China during the fiscal year ending June 30, 1869	2	1	1	127
DD.—Statement of letters and newspapers, with the several postages, received in and sent from the United States to Honolulu during the fiscal year ended June 30, 1869	2	1	1	128
EE.—Statement of letters and newspapers, with the several postages, on the mails sent from the United States to Cape Town, Africa, (direct,) during year ending June 30, 1869	2	1	1	128

Title.	Vol.	Part.	No.	Page.
Papers, &c.—Continued.				
FF.—Statement of amount of letter-postage on Nova Scotia and Prince Edward Island mails received in and sent from the United States during the fiscal year ending June 30, 1869	2	1	1	128
GG.—Number of letters exchanged between the United States and foreign countries during the fiscal year ending June 30, 1869	2	1	1	129
HH.—Amount of postages on mails exchanged between the United States and the British Provinces during the fiscal year ended June 30, 1869	2	1	1	129
II.—Amounts reported as due the steamers of the miscellaneous, or Dale line, for services rendered during the fiscal year ending June 30, 1869	2	1	1	129
KK.—Balances due the United States on the adjustment of postal accounts with foreign countries for the quarters indicated	2	1	1	131
Postmaster General submits estimates of appropriations for the Post Office Department for the next fiscal year	5	.....	13	
Postmaster General transmits list of desks, clerks, &c., employed in the Post Office Department for year ending June 30, 1869	5	.....	24	
Postmaster General transmits answer to resolution of the House, inquiring relative to persons holding United States office having been employed to treat for his Department with foreign nations	5	.....	40	
Postmaster General transmits answer to resolution of the House, relative to the contracts for transporting mails on railway lines	6	.....	90	
Postmaster General transmits answer to resolution of the House of Representatives, relative to the loss of stamps from the post office at Havre de Grace, Maryland	6	.....	100	
Postmaster General transmits answer to resolution of the House, relative to the payment of pensions through the Money-order Bureau	7	.....	199	
Postmaster General transmits answer to resolution of House, relative to the letter-carrier system	11	.....	233	
Postmaster General transmits report of receipts and expenditures of the Post Office Department for fiscal years ending June 30, 1867 and 1868	12	.....	275	
Postmaster General transmits statement of fines and deductions	12	.....	289	
Postmaster General communicates relative to his action in rejecting all bids made by Bryan Tyson for transportation of the mails	12	.....	293	
Postmaster General transmits reports required by the act of Congress of July 2, 1836	13	.....	314	
Post Office Department. Organization of the	.....	.....	314	
Post traders. Secretary of War communicates relative to sales by, to enlisted men	11	.....	249	
President of the United States, on the state of the Union, with accompanying documents and reports. Annual message of the	2	1	1	
President of the United States, in answer to a resolution of the House of Representatives of the 8th instant, transmitting a list of the States ratifying the fifteenth amendment. Message from the	5	.....	15	
President of the United States, in answer to a resolution of the House of the 13th instant, requesting a copy of any correspondence had with Spain relative to Cuba. Message from the	5	.....	22	
President of the United States, in answer to a resolution of the House of the 9th instant, transmitting the action of Alabama on the fifteenth amendment. Message from the	5	.....	26	

Title.	Vol.	Part.	No.	Page
President of the United States, in answer to resolution of the House of 9th December asking for charges, testimony, findings, and sentence of Passed Assistant Surgeon Charles L. Green, United States Navy. Message of the	5	.....	30	
President of the United States, in answer to resolution of the House of January 17, relative to appropriations for the Darien Ship Canal. Message from the	6	.....	81	
President of the United States, in answer to a resolution of the House of February 3, calling for number of copies of "Tributes of the Nations to Abraham Lincoln." Message from the	6	.....	128	
President of the United States, transmitting answer to resolution of the House of February 10, relative to claims of American citizens against Spain for payment in coin. Message from the	6	.....	139	
President of the United States, in answer to resolution of the House relative to the murder of Americans in Cuba. Message from the	6	1, 2	140	
President of the United States, in answer to resolution of the House of February 7, relative to the struggle for freedom in Cuba. Message from the	7	.....	160	
President of the United States, in answer to resolution of the House of January 15, relative to American citizens confined in jails or prisons in Great Britain. Message from the	7	.....	170	
President of the United States, transmitting communication from the Secretary of State relative to claims of citizens of the United States against Venezuela. Message from the	7	.....	176	
President of the United States, in answer to a resolution of the House of December 20, relative to citizens imprisoned in military custody. Message from the	11	.....	225	
President of the United States, in answer to a resolution of the House of March 28, asking a list of privileges accompanying or relating to the San Domingo treaty. Message from the	11	.....	237	
President of the United States, in answer to a resolution of the House of February 7, relative to fisheries in British waters. Message from the	11	.....	239	
President of the United States, in answer to a resolution of the House of March 7, relative to difficulties with various Indian tribes. Message from the	11	.....	240	
President of the United States, transmitting report of Samuel B. Ruggles, a delegate to the International Monetary Convention, at Paris. Message from the	12	.....	266	
President of the United States, transmitting papers relative to claim of John R. Brady. Message from the	12	.....	279	
President of the United States, in answer to a resolution of the House of March 21, relative to the movement of troops to Kansas. Message from the	12	.....	270	
President of the United States, in answer to a resolution of the House relative to Spanish war vessels coming to the United States for repairs. Message from the	7	.....	177	
Prisoners, American citizens confined as, in Great Britain. Message of the President in answer to a resolution of the House relative to	7	.....	170	
Prisons. Secretary of War transmits report of the Adjutant General recommending a system of military	6	.....	61	
Public buildings. Secretary of the Treasury transmits report of Supervising Architect relative to the erection of, at Erie, Pennsylvania, &c	6	.....	135	
Public buildings. Secretary of the Treasury transmits answer to resolution of the House of February 16, relative to, at Paducah, Kentucky	7	.....	178	
Public buildings. Secretary of the Treasury transmits answer to resolution of the House relative to requirements for new	7	.....	213	

Title.	Vol.	Part.	No.	Page.
Public debt. Letter from the Secretary of the Treasury in answer to resolution of the House of March 9, transmitting statement of payments on account of, from 1789 to 1836	7	.....	210	
Public debt. Letter from the Secretary of the Treasury in answer to resolution of the House of July 6, 1870, relative to the amount of the, at the end of each fiscal year	13	.....	310	
Q.				
Quarantine steamer Illinois. Secretary of War communicates relative to the, being transferred to New York	12	.....	268	
R.				
Railroad, grant of land to the Grand Haven. Commissioner of the General Land Office transmits answer to resolution of the House of December 15 relative to	5	.....	33	
Railroads. Postmaster General transmits answer relative to transportation of the mails by	6	.....	90	
Railroad. Secretary of the Interior transmits answer relative to resolution of the House calling for report of chief engineer of Union Pacific	6	.....	132	
Railroad. Secretary of the Interior transmits answer relative to the Atlantic and Pacific	7	.....	195	
Railway companies. Secretary of the Treasury transmits answer relative to the Pacific	7	.....	201	
Railroad. Secretary of the Interior transmits estimates of appropriations for the survey of public lands within the limits of the grant to the Union Pacific	11	.....	230	
Railroad Company. Secretary of the Treasury answers the House relative to the interest due upon the bonds issued to the Pacific	11	.....	234	
Railroad. Secretary of War answers the House relative to the accounts of the Nashville and Decatur	6	.....	109	
Rank, line, and staff in the Navy. Secretary of the Navy transmits answer to inquiry of the House relative to	6	.....	52	
Rank, assimilated, in the Navy. Secretary of the Navy transmits answer to inquiry of the House relative to the subject of	6	.....	99	
Rank, staff, in the Navy. Secretary of the Navy transmits all correspondence with Admiral Farragut relative to	7	.....	171	
Raymond, Rossiter W. Report of, on mines and mining west of the Rocky Mountains	10	.....	207	
Receipts and expenditures of Post Office Department. Postmaster General transmits statement of the	12	.....	275	
Reservation. Secretary of War answers the House relative to providing for the sale of the Fort Gratiot military, in Michigan	6	.....	54	
Reservations, survey of Indian. Secretary of the Interior transmits copy of letter from Commissioner of Indian Affairs with estimates of appropriations for, for year ending June 30, 1871	6	.....	53	
Reservation, military, at Fort Wayne. Secretary of War recommends the passage of a joint resolution authorizing him to relinquish to General Land Office	7	.....	186	
Reservation, United States military, at Fort Dakota. Secretary of War communicates information for Committee on the Public Lands relative to	7	.....	189	
Reservation, United States military, at Fort Kearny. Secretary of War informs the House that the, is no longer required	7	.....	194	
Reservation, Indian, in San Diego County, California. Secretary of the Interior answers the House relative to the	12	.....	296	
Reservation, military, at Point San José, California. Secretary of War transmits report of Chief of Engineers relative to the	12	.....	305	

Title.	Vol.	Part.	No.	Page
Revenue officers. Secretary of the Treasury answers the House relative to abolishing all allowances of penalties, fines, forfeitures, &c., to, as informers in the collection of internal revenue	12	.....	283	
Revenue. Secretary of the Treasury transmits report of Special Commissioner of the	5	.....	27	
Revenue. Secretary of the Treasury answers resolution of the House relative to persons other than regularly appointed officers employed in Brooklyn or New York to aid in collecting internal	7	.....	208	
Reynolds, Benjamin F. Secretary of War transmits petition of, for relief	12	.....	274	
River. Secretary of War answers the House relative to the progress made in deepening the passes of the Mississippi	5	.....	46	
River. Secretary of War answers the House relative to the Des Moines and Rock Island Rapids of the Mississippi	5	.....	43	
River. Secretary of War answers the House relative to survey of the Housatonic	6	.....	62	
River. Secretary of War transmits report of General Warren, of Engineer Corps, relative to improvement of the Mississippi, at or near the Falls of St. Anthony	6	.....	118	
River. Secretary of War answers the House relative to navigable condition of the Savannah, with report of Chief of Engineers	7	.....	153	
River. Secretary of the Treasury answers the House relative to establishing range-lights in St. Clair, Michigan	7	.....	182	
River. Secretary of the Interior transmits estimate of appropriations to complete the exploration of the Colorado	12	.....	280	
River. Secretary of War transmits report of Chief of Engineers upon the proposed continuation of the exploration of the Colorado	12	.....	281	
River. Secretary of War answers the House relative to the improvement of the Upper Mississippi	12	.....	285	
River. Secretary of War answers the House relative to survey of the Arkansas, by S. T. Abert	12	.....	295	
Ryan-Hitchcock marine fortifications. Secretary of War answers the House relative to the	5	.....	17	
S.				
Saltpeter. Secretary of the Treasury calls the attention of Committee of Ways and Means to the duties on	6	.....	94	
San Domingo. Message from the President answering the House relative to list of privileges accompanying the treaty with	11	.....	237	
Sandy Hook. Secretary of War transmits copies of all papers on file relating to the jurisdiction of the United States over	7	.....	166	
Schools in the District of Columbia. Report of Professor H. Barnard on the subject of	13	.....	315	
Seamen. Secretary of State transmits abstract of returns by collectors of customs for the relief and protection of American	5	.....	6	
Seymour, S. Secretary of the Interior transmits account of, of expenses in making survey for a bridge across the Potomac River	5	.....	19	
Ship-canal. Secretary of War answers the House transmitting reports of General T. J. Cram upon the St. Mary's Falls	7	.....	198	
Ship-canal. Secretary of War communicates upon the St. Mary's Falls	7	.....	205	
Sinking fund. Secretary of the Treasury answers the House relative to the operation of the, in extinguishing the debts of the war of the revolution and of 1812	7	.....	215	
Sinking fund. Secretary of the Treasury answers the House relative to the purchase of bonds for the	11	.....	231	

Title.	Vol.	Part.	No.	Page.
Soldiers. Secretary of War transmits memorial of, of the regular Army relative to equalization of bounties	7	.....	191	
Soldiers. Secretary of War communicates relative to the large demands upon the appropriation for payment to discharged, for clothing not drawn	11	.....	223	
Soldiers. Secretary of War answers the House relative to the collection and payment of bounties to colored	11	.....	241	
Southern States. Secretary of War transmits reports concerning officers of the Army on duty in the, who are in receipt of salaries both from State treasuries and the treasury of the United States	7	.....	211	
Spain. Message of the President of the United States answering the House relative to Spanish war vessels coming to the United States for repairs	7	.....	177	
State Department. Correspondence of the, upon foreign affairs	1	1, 2	1	
State Department. Secretary of State communicates relative to a site for a building for the	6	.....	71	
State, Secretary of, transmits abstract of returns by collectors of customs for relief and protection of seamen	5	.....	6	
State, Secretary of, asks an appropriation for publishing the laws of the United States	5	.....	8	
State, Secretary of, transmits report of number, compensation, reduction, &c., of the clerical force in his Department	5	.....	9	
State, Secretary of, communicates relative to indemnity funds received from the governments of China and Japan, by his Department	6	.....	69	
State, Secretary of, communicates relative to a commission appointed by Congress to select a site for the erection of a building for the State Department	6	.....	71	
State, Secretary of, communicates relative to the sum of $600,000 in gold paid as indemnity for aggressions upon our commerce	6	.....	77	
State, Secretary of, transmits statement of contingent expenses of his Department for the year ending June 30, 1869	6	.....	110	
State, Secretary of, communicates relative to an international exhibition in London in 1871	7	.....	181	
State, Secretary of, transmits report in compliance with an act of Congress of March 3, 1855 regulating the carriage of passengers in steamships and other vessels	11	.....	235	
Statutes at Large. Secretary of the Interior communicates relative to furnishing circuit judges of the United States courts with sets of Little & Brown's	12	.....	282	
Steamer Illinois, for quarantine purposes. Secretary of War communicates relative to the transfer of, to New York	12	.....	268	
Storekeepers. Secretary of the Treasury answers the House relative to salaries of internal revenue	11	.....	226	
Strong, James C. Secretary of War transmits information for Committee on Military Affairs, the report of the Adjutant General of the Army relative to the claim of	7	.....	180	
Surgeon General. Annual report of the	2	2	1	419
Surgeon General asks an appropriation for care, &c. of transient paupers at Providence Hospital; incloses a report of expenditures for completion of Providence Hospital, Washington, District of Columbia, during the year 1869	5	.....	12	
T.				
Tael of China. Secretary of the Treasury communicates relative to the value of the	11	.....	229	
Tappan, John E. Secretary of the Interior transmits accounts of, for goods given to Kiowa Indians	7	.....	151	

Title.	Vol.	Part.	No.	Page.
Tariff. Secretary of the Treasury calls the attention of the Committee of Ways and Means to the duties on saltpeter.	6	.....	94	
Tariff. Secretary of the Treasury communicates relative to duty on wire rods	.....	.....	221	
Taxes. Commissioner of Internal Revenue answers the House relative to the expediency of abolishing the internal, &c	7	.....	214	
Taxes. Secretary of the Treasury transmits a report made to the Commissioner of Internal Revenue relative to the collection of direct	13	.....	312	
Telegraph companies. Secretary of the Treasury answers the House relative to the refusal of, in New York to report to the internal revenue assessor the amount of gross receipts	12	.....	301	
Territories, penitentiaries in the. Secretary of the Interior communicates relative to act of Congress setting aside certain proceeds from internal revenue for the erection of.	7	.....	192	
Territories. Secretary of the Interior communicates relative to	12	.....	286	
Texas. Secretary of War transmits communication from the commandant of the Fifth Military District, urging an appropriation for expenses of the recent election in	6	.....	59	
Texas. Secretary of War transmits copies of the returns of the election held in the second congressional district of..	12	.....	265	
Texas. Secretary of War transmits certain papers relative to the taking of the oath required by the constitution of.	6	.....	60	
Tice meters. Secretary of the Treasury transmits communication from the Commissioner of Internal Revenue relative to the	11	.....	250	
Tice meters. Commissioner of Internal Revenue communicates relative to the	12	.....	272	
Tobacco and liquors. Secretary of the Treasury answers the House of Representatives, transmitting a statement relative to the amount of tax collected on	6	.....	124	
Treasury. On the state of the finances for year 1869, annual report of the Secretary of the	4	.....	2	1
Papers accompanying the above.				
The Secretary's report	4	.....	2	5
Tables accompanying report.				
1. Public debt and synopsis of laws creating it	4	.....	2	22
2. Receipts and expenditures of the United States for first quarter of 1869	4	.....	2	30
3. Liabilities to Indian tribes	4	.....	2	375
4. Payments of judgments rendered by Court of Claims	4	.....	2	484
II. Reports of treasury officers.				
Architect, Supervising	4	.....	2	187
1. Public buildings and the cost of sites, construction and repairs up to 1869	4	.....	2	206
2. Appropriations for the erection and repairs of the same	4	.....	2	209
3. Expenditures for 1869 and balances remaining	4	.....	2	210
4. Expenditures for furniture and repairs of furniture	4	.....	2	210
5. Expenditures for repairs and preservation of public buildings	4	.....	2	211
6. Monthly report of superintendent at Boston, Massachusetts	4	.....	2	212
7. Quarterly report of materials, machinery, &c., from the same	4	.....	2	215
Auditor, First	4	.....	2	81

Title.	Vol.	Part.	No.	Page.
Reports, &c.—Continued.				
Auditor, Second	4	.....	2	91
Auditor, Third	4	.....	2	107
Auditor, Fourth	4	.....	2	135
Auditor, Fifth	4	.....	2	145
1. Expenses of foreign missions for fiscal year 1869	4	.....	2	151
2. Consular salaries and fees for fiscal year 1869	4	.....	2	156
3. Expenditures for relief of American seamen, 1869	4	.....	2	161
4. Number of destitute American seamen returned to the United States	4	.....	2	163
5. Amounts expended by consular officers on account of criminal seamen	4	.....	2	164
6. Amounts refunded to citizens and seamen, 1869	4	.....	2	164
7. Department accounts received and allowed	4	.....	2	165
8. Expenses of collecting the internal revenue taxes, 1869	4	.....	2	166
9. Amounts paid to internal revenue inspectors	4	.....	2	177
10. Expenses of collecting internal revenue taxes in insurrectionary districts, 1869	4	.....	2	177
11. Miscellaneous expenses of collecting internal revenue taxes, 1869	4	.....	2	177
12. Drawbacks on merchandise refunded, 1869	4	.....	2	178
13. Amount paid for internal revenue stamps	4	.....	2	179
Auditor, Sixth, (for Post Office Department)	4	.....	2	183
Coast Survey	4	.....	2	397
Commissioner of Customs	4	.....	2	67
Commissioner of Internal Revenue	4	.....	2	3
Commissioner of Indian Affairs	4	.....	2	375
Comptroller of Currency	4	.....	2	21
1. Statement showing the number of banks, circulation, &c	4	.....	2	41
2. National banks in liquidation, first quarter 1869	4	.....	2	42
3. National banks in voluntary liquidation	4	.....	2	42
4. National banks in hands of receivers	4	.....	2	43
5. State of the lawful money reserves required by law	4	.....	2	44
6. Officers and employés of the Bureau and their compensation	4	.....	2	52
Silver coinage from 1853 to 1859	4	.....	2	367
Deposits of domestic silver productions from 1841 to 1869	4	.....	2	368
Gold coins of different countries	4	.....	2	369
Gold coins, their weight and value	4	.....	2	370
Silver coins, their weight and value	4	.....	2	370
Gold, silver, and copper coinage from 1792 to 1869	4	.....	2	371
Light-house Board	4	.....	2	409
Register	4	.....	2	295
1. Claims paid "not otherwise provided for," 1869	4	.....	2	300
2. Customs employés and their compensation	4	.....	2	301
3. Expenditures at each custom-house previous to 1869	4	.....	2	314
4. Expenditures of the revenue-cutter service	4	.....	2	316
5. Public debt statement from 1791 to 1869	4	.....	2	317
6. Total revenue of the United States from 1791 to 1869	4	.....	2	318
7. Total expenditures of the United States from 1791 to 1869	4	.....	2	320
8. Tonnage of United States vessels from 1789 to 1869	4	.....	2	322
9. Payments of judgments of Court of Claims	4	.....	2	324
10. Tonnage of American vessels by collection districts, 1869	4	.....	2	326
Solicitor	4	.....	2	331
1. Suits brought and business arising therefrom, 1869	4	.....	2	332
Superintendent of weights and measures	4	.....	2	403

Title.	Vol.	Part.	No.	Page.
Papers, &c.—Continued.				
Treasurer	4	.....	2	219
1. Receipts and payments by the United States assistant treasurers and depositaries	4	.....	2	288
(For a detailed index of this report see pp. 495 to 498 inclusive.)				
Treasury, Secretary of the, transmits the annual report of the Commissioner of Internal Revenue for the year ending June 30, 1869	5	.....	4	
Treasury, Secretary of the, transmits estimates of additional appropriations required to complete the service of the fiscal year ending June 30, 1870, and appropriations required for fiscal year ending June 30, 1871	5	.....	5	
Treasury, Secretary of the, communicates relative to the payment of bounty for the capture of Jefferson Davis	5	.....	34	
Treasury, Secretary of the, transmits answer to a resolution of the House of December 5, calling for a copy of report of the late special agent of his Department for Alaska	5	.....	36	
Treasury, Secretary of the, communicates relative to steamboats and other vessels owned in loyal States and taken by the Government without consent of owners during the war	5	.....	45	
Treasury, Secretary of the, communicates relative to the sum of six hundred thousand dollars paid the United States as indemnity for aggression upon our commerce, under treaty with Japan	6	.....	51	
Treasury, Secretary of the, communicates relative to purchase of David's Island for a marine hospital	6	.....	55	
Treasury, Secretary of the, transmits statement of the amount appropriated and expended in the construction of the Washington aqueduct	6	.....	56	
Treasury, Secretary of the, communicates relative to errors in book of estimates	6	.....	57	
Treasury, Secretary of the, communicates relative to deficiencies in appropriations for Utah	6	.....	68	
Treasury, Secretary of the, communicates relative to an omitted estimate for 1870–'71	6	.....	70	
Treasury, Secretary of the, communicates relative to the claim of the heirs of Pedro Armendaris for use of Fort Craig military reservation, New Mexico	6	.....	73	
Treasury, Secretary of the, communicates relative to captured and abandoned property	6	.....	89	
Treasury, Secretary of the, communicates relative to pay and emoluments of officers of the Navy	6	.....	91	
Treasury, Secretary of the, calls the attention of the Committee of Ways and Means to the duties on saltpeter	5	.....	94	
Treasury, Secretary of the, communicates relative to the amount of banking capital in the several States	6	.....	95	
Treasury, Secretary of the, asks an appropriation to supply a deficiency in the appropriation for the mint at Charlotte, North Carolina	6	.....	98	
Treasury, Secretary of the, transmits a draught of a bill for the reorganization of the marine hospital service	6	.....	101	
Treasury, Secretary of the, asks an appropriation to purchase additional land for the custom-house at Castine, Maine	6	.....	103	
Treasury, Secretary of the, communicates relative to repairs of the custom-houses at Savannah, Georgia, and Mobile, Alabama	6	.....	104	
Treasury, Secretary of the, transmits report of Special Commissioner of the Revenue upon the industry, trade, and commerce, &c., of the United States	5	.....	27	

Title.	Vol.	Part.	No.	Page.
Treasury, Secretary of the, transmits estimates for deficiencies in Treasury Department for year 1869–'70	6	.....	65	
Treasury, Secretary of the, answers resolution of House, transmitting a report from Comptroller of the Currency relative to the national banking associations	6	.....	74	
Treasury, Secretary of the, incloses statement of balances unexpended on the 30th September, 1869, &c.	6	.....	79	
Treasury, Secretary of the, transmits statement of the number of clerks and others employed in the bureaus of the Treasury for year 1869	6	.....	93	
Treasury, Secretary of the, transmits report of the Chief of the Division of Tonnage in Treasury Department relative to the foreign commerce of the United States and the decadence of American shipping	6	.....	111	
Treasury, Secretary of the, answers the House, transmitting report of acting inspector of customs concerning the Youkon River and the Islands of St. Paul and St. George, Alaska	6	.....	112	
Treasury, Secretary of the, answers resolution of House of January 31, transmitting statement relative to amount of tax collected on liquors and tobacco for year ending December 31, 1869	6	.....	124	
Treasury, Secretary of the, answers the House relative to the fur-seal fisheries of Alaska	6	.....	129	
Treasury, Secretary of the, answers House relative to all special agents and assistants of the Treasury Department on the rolls on the 4th of March, 1869	6	.....	133	
Treasury, Secretary of the, transmits reports of the Supervising Architect of the Treasury relative to the erection of public buildings at Erie, Pennsylvania, &c.	6	.....	135	
Treasury, Secretary of the, answers the House, transmitting report of the special agent of Alaska upon the fur-seal fisheries	6	.....	136	
Treasury, Secretary of the, answers the House relative to the number of special agents appointed and now acting for the Treasury Department	6	.....	141	
Treasury, Secretary of the, transmits a statement of the receipts from revenue and customs in Alaska	7	.....	143	
Treasury, Secretary of the, transmits statement of incidental and contingent expenses of his Department for year ending June 30, 1869	7	.....	147	
Treasury, Secretary of the, transmits statement of unexpended balances on 30th June, 1869; also estimates to complete the service of the current fiscal year, &c.	7	.....	155	
Treasury, Secretary of the, transmits statement of the expenditures for public and private purposes in the District of Columbia from the establishment of the seat of government to December 31, 1869	7	.....	156	
Treasury, Secretary of the, answers the House relative to a light to mark the pier at the harbor of Plymouth, &c., Massachusetts	7	.....	159	
Treasury, Secretary of the, answers the House relative to harbor-masters' fee exacted under the laws of New York.	7	.....	169	
Treasury, Secretary of the, transmits estimates for the cost of cases and fixtures for the Treasury building	7	.....	168	
Treasury, Secretary of the, answers the House, transmitting a report of the Comptroller of the Currency relative to circulating notes furnished national banks	7	.....	173	
Treasury, Secretary of the, transmits draught of bill to provide for the better security of life on steam and other vessels	7	.....	175	
Treasury, Secretary of the, answers the House relative to the erection of a public building at Paducah, Kentucky	7	.....	178	
Treasury, Secretary of the, answers the House relative to establishing range-lights on St. Clair River, Michigan	7	.....	182	

Title.	Vol.	Part.	No.	Page.
Treasury, Secretary of the, answers the House relative to money paid bank-note companies, &c	7	.....	188	
Treasury, Secretary of the, communicates relative to an appropriation for grading, &c., around the custom-house lot at Wiscasset, Maine	7	.....	193	
Treasury, Secretary of the, asks an appropriation of $230,000 to meet the current expenses of the Marine Hospital	7	.....	196	
Treasury, Secretary of the, answers the House relative to the Pacific Railway companies	7	.....	201	
Treasury, Secretary of the, answers the House relative to persons other than regularly appointed revenue officers employed in the city of Brooklyn or New York to aid in the collection of internal revenue	7	.....	208	
Treasury, Secretary of the, answers the House relative to the necessity of a light-house on the southern shore of Lake Ontario	7	.....	209	
Treasury, Secretary of the, transmits detailed statement showing the payments on account of the public debt from 1789 to 1836	7	.....	210	
Treasury, Secretary of the, answers the House relative to the requirements of the public service for new public buildings	7	.....	213	
Treasury, Secretary of the, answers the House relative to the operation of the sinking fund in extinguishing the war debt of the Revolution and war of 1812, &c	7	.....	215	
Treasury, Secretary of the, transmits report of Rossiter W. Raymond on mines and mining west of the Rocky Mountains	10	.....	207	
Treasury, Secretary of the, communicates relative to the establishment of the office of assistant treasurer in Baltimore	11	.....	219	
Treasury, Secretary of the, incloses a letter from the Secretary of State asking an appropriation to pay the awards under the Hudson Bay and Puget Sound Agricultural Company's treaty with her Britannic Majesty	11	.....	220	
Treasury, Secretary of the, communicates relative to the duty on wire rods	11	.....	221	
Treasury, Secretary of the, transmits detailed statement of expenditures out of the appropriation contained in the 11th section of chapter 54 of statutes of 1862 for colonization purposes	11	.....	222	
Treasury, Secretary of the, answers the House relative to the salaries of internal revenue storekeepers	11	.....	226	
Treasury, Secretary of the, transmits letter from the Secretary of the Interior relative to the accounts of the colonization agent	11	.....	227	
Treasury, Secretary of the, communicates relative to the value of the tael of China	11	.....	229	
Treasury, Secretary of the, answers the House relative to the purchase of bonds for the sinking fund	11	.....	231	
Treasury, Secretary of the, answers the House relative to the interest due upon the bonds issued to the Pacific Railroad Company	11	.....	234	
Treasury, Secretary of the, answers the House relative to the condition and management of the marine hospital at Mobile	11	.....	246	
Treasury, Secretary of the, transmits letter from the Commissioner of Internal Revenue relative to certain spirits distilled under direction of a committee to make certain tests of spirit-meters	11	.....	251	
Treasury, Secretary of the, transmits communication from the Commissioner of Internal Revenue relative to the Tice meter	11	.....	250	

Title.	Vol.	Part.	No.	Page.
Treasury, Secretary of the, transmits letter from the Superintendent of the United States Coast Survey asking an appropriation to survey Alaska and the Aleutian Islands.	11	.....	255	
Treasury, Secretary of the, transmits letter from the Supervising Architect of the Treasury Building asking for an appropriation of $24,630 for the purpose of ventilating the south and north portions of west wing	12	.....	257	
Treasury, Secretary of the, answers the House transmitting statement of balances due from collectors of internal revenue who are not now in office	12	.....	267	
Treasury, Secretary of the, transmits statement of the account for the relief of the children and heirs of John Chilton, deceased	12	.....	276	
Treasury, Secretary of the, answers the House relative to all allowances of penalties, fines, forfeitures, &c., to officers of the revenue or informers	12	.....	283	
Treasury, Secretary of the, transmits draught of a bill to remedy embarrassments in the enforcement of the laws relating to navigation and collection of customs	12	.....	292	
Treasury, Secretary of the, answers the House relative to the sale of the Battery at New York for the erection of custom-house stores thereon	12	.....	294	
Treasury, Secretary of the, asks for an appropriation for the maintenance of the marine hospital service for next fiscal year	12	.....	298	
Treasury, Secretary of the, answers the House relative to the refusal of telegraph companies in New York to report gross receipts	12	.....	301	
Treasury, Secretary of the, transmits report of John Jay Knox relative to the revision of the mint and coinage laws	12	.....	307	
Treasury, Secretary of the, transmits in answer to resolution of the House of July 2, 1870, a statement of unexpended balances	13	.....	309	
Treasury, Secretary of the, transmits answer to resolution of the House calling for statement of amount of the public debt at the end of each fiscal year	13	.....	310	
Treasury, Secretary of the, transmits report made to the Commissioner of Internal Revenue relative to the collection of direct taxes	13	.....	312	
Treasury, Secretary of the, answers the resolution of the House of June 27, 1870, relative to the customs cartage system of the port of New York	13	.....	313	
Treaty with San Domingo. Message of the President of the United States in answer to request of the House for list of privileges accompanying or relating to the	11	.....	237	
Treaty. Secretary of the Treasury asks for an appropriation to pay the awards under the Hudson's Bay and Puget Sound Agricultural Companies, with her Britannic Majesty	11	.....	220	
Troops to Kansas. Message of the President of the United States in answer to the House relative to the movement of.	12	.....	270	
Tyson, Bryan. Postmaster General communicates relative to his action in rejecting all bids made by	12	.....	293	
U.				
Upshur, Commander John H., United States Navy. Secretary of the Navy transmits proceedings of the general naval court-martial in the case of	13	.....	308	
Utah. Secretary of War transmits report of expenses for suppressing Indian hostilities in	5	.....	44	
Utah. Secretary of the Treasury transmits copy of a letter from the secretary of the Territory of, relative to the deficiency in appropriations for	6	.....	68	

Title.	Vol.	Part.	No.	Page.
V.				
Venezuela. Message from the President of the United States transmitting communication from the Secretary of State relative to claims of citizens of the United States against the government of	7	.....	176	
Ventilation of the treasury building. Secretary of the Treasury transmits letter from the Supervising Architect of the Treasury Building relative to	12	.....	257	
Ventilation of the Interior Department. Secretary of the Interior communicates relative to the condition of his building as to light, &c	12	.....	300	
Vessels, detention of, owned in loyal States. Secretary of the Treasury communicates relative to	5	.....	45	
Vessels. Secretary of the Navy answers the House transmitting a list of, in the United States, the names of which have been changed since the 4th of March, 1869	6	.....	92	
Vessels. Secretary of the Treasury transmits draught of bill to provide for the better security of life on board of, &c	7	.....	175	
Vessels. Message of the President of the United States in answer to the House relative to Spanish war, coming to the United States for repairs	7	.....	177	
Vessels. Secretary of the Navy answers the House relative to officers and, of the Navy	7	.....	203	
Vessels. Secretary of State transmits report in compliance with act of Congress of March 3, 1855, regulating the carriage of passengers in steamships and other	11	.....	235	
Vessels. Secretary of the Navy answers the House relative to the number of officers now on the active list in the Navy, number of, in the Navy of each rate, &c	12	.....	277	
Virginia. Secretary of the Interior answers the House giving number of acres of public lands in, and other States	5	.....	29	
Virginia. Secretary of War communicates relative to the administration of civil law in	5	.....	42	
W.				
War of 1812. Secretary of War communicates relative to the surviving soldiers of the	6	.....	85	
War. Annual report of the Secretary of	2	2	1	1
Papers accompanying the above.				
Report of the General of the Army	2	2	1	23
Papers accompanying the above.				
Table No. 1.—Proposed organization of the line of the Army on a basis of twelve companies per regiment	2	2	1	34
Table No. 2.—Proposed organization of the line of the Army on a basis of ten companies per regiment	2	2	1	34
Table No. 3.—Present distribution of the Army of the United States	2	2	1	35
Report of Lieutenant General Sheridan, Division of Missouri	2	2	1	36
Report of Major General Hancock, Department of Dakota	2	2	1	56
Report of Major General Schofield, Department of the Missouri	2	2	1	67
Report of Brevet Major General Augur, Department of the Platte	2	2	1	70
Report of Major General H. W. Halleck, Division of the South	2	2	1	75

Title.	Vol.	Part.	No.	Page.
Papers, &c.—Continued.				
Report of Brevet Major General P. St. George Cook, Department of the Cumberland	2	2	1	80
Report of Brevet Major General Alfred H. Terry, Department of the South	2	2	1	83
Report of Major General J. A. Mower, Department of Louisiana	2	2	1	95
Report of Brevet Major General Adelbert Ames, Department of Mississippi	2	2	1	99
Report of Major General George G. Meade, Division of the Atlantic	2	2	1	101
Report of Major General W. S. Hancock	2	2	.....	104
Report of Brevet Major General Irvin McDowell, Department of the East	2	2	1	105
Report of Brevet Major General John Pope, Department of the Lakes	2	2	1	108
Report of Brevet Major General E. R. S. Canby, First Military District	2	2	1	109
Report of Major General George H. Thomas, Division of the Pacific	2	2	1	113
Report of Brevet Major General E. O. C. Ord, Department of California	2	2	1	121
Report of Brevet Major General Jefferson C. Davis, Department of Alaska	2	2	1	135
Report of Brevet Major General George Crook, Department of the Columbia	2	2	1	139
Report of Major General J. J. Reynolds, Fifth Military District	2	2	1	143
Annual report of the Adjutant General of the Army	2	2	1	149
Report of the Inspector General	2	2	1	175
Judge Advocate General	2	2	1	182
Chief Signal Officer	2	2	1	186
Quartermaster General	2	2	1	205
Commissary General of Subsistence	2	2	1	409
Surgeon General	2	2	1	419
Paymaster General	2	2	1	429
Chief of Ordnance	2	2	1	439
United States Military Academy	2	2	1	465
Officers of the Military Academy	2	2	1	461
Board of Visitors	2	2	1	479
Officers of the Board	2	2	1	478
Commissioner of the Bureau of Refugees, Freedmen, &c	2	2	1	497
War, transmitting report of commanding officer at Camp Gaston, California, relative to the murder of an Indian by a white settler. Letter from the Secretary of	5	.....	16	
War in answer to joint resolution of February 19, 1869, relative to the Ryan-Hitchcock mode of marine fortifications. Letter from the Secretary of	5	.....	17	
War, transmitting report of Chief of Engineers upon the public works in the harbor at Oswego, New York. Letter from the Secretary of	5	.....	20	
War, transmitting report of Chief of Engineers upon the public works and improvements in the harbor of Plymouth, Massachusetts. Letter from the Secretary of	5	.....	18	
War, transmitting papers relative to the claim of William A. Howard for pay as colonel of the New York marine regiment, &c. Letter from the Secretary of	5	.....	21	
War, in answer to a resolution of the House of April 1, 1869, transmitting reports in regard to claims of persons claiming to reside in the fourth congressional district of Missouri. Letter from the Secretary of	5	.....	23	
War, in answer to a resolution of the House of Representatives of December 10, transmitting surveys as to impediments and obstructions in the rivers and harbors of Massachusetts. Letter from the Secretary of	5	.....	25	

Title.	Vol.	Part.	No.	Page.
War, in answer to a resolution of the House of the 11th December transmitting report of the Chief of Engineers of survey of the harbor at Port Washington, in Wisconsin. Letter from the Secretary of	5	.....	28	
War, transmitting a report of the Chief of Engineers upon Rock Island bridge. Letter from the Secretary of	5	.....	31	
War, transmitting annual report of expenditures at the National Armory at Springfield, during the year 1869. Letter from the Secretary of	5	.....	32	
War, in answer to a resolution of the House of Representatives of December 15 in relation to the payment of the reward authorized by law for the capture of Jefferson Davis. Letter from the Secretary of	5	.....	35	
War, in answer to request of the Committee on Military Affairs, transmitting statement of retired officers of the Army now on duty, with regard to pay, &c. Letter from the Secretary of	5	.....	38	
War, transmitting draught of a proposed bill providing for the sale of certain surplus military arsenals of the United States. Letter from the Secretary of	5	.....	39	
War, in answer to a resolution of the House of Representatives of December 21, 1869, transmitting report of the Chief of Engineers upon the condition of New Haven harbor. Letter from the Secretary of	5	.....	41	
War, in regard to the administration of civil law in Virginia. Letter from the Secretary of	5	.....	42	
War, in answer to a resolution of the House of Representatives of December 13 relative to the Des Moines and Rock Island Rapids of the Mississippi River. Letter from the Secretary of	5	.....	43	
War, transmitting report of expenses for suppressing Indian hostilities in Utah. Letter from the Secretary of	5	.....	44	
War, in answer to a resolution of the House of Representatives of December 14 relative to the progress made in the work of deepening the passes of the Mississippi River. Letter from the Secretary of	5	.....	46	
War, in answer to a resolution of the House of Representatives of December 9 relative to the condition and improvement of the Patapsco River. Letter from the Secretary of	5	.....	47	
War, transmitting certain papers relating to the site of the United States Artillery School at Fortress Monroe, Virginia. Letter from the Secretary of	6	.....	49	
War, in answer to a resolution of the House of Representatives of July 20, 1868, providing for the sale of a portion of Fort Gratiot military reservation, State of Michigan. Letter from the Secretary of	6	.....	54	
War, transmitting communication from the fifth military district urging an immediate appropriation for expenses of the recent election in Texas. Letter from the Secretary of	6	.....	59	
War, in answer to resolution of the House of Representatives of December 7, transmitting statement of the amount appropriated and expended in the Washington aqueduct. Letter from the Secretary of	6	.....	56	
War, transmitting certain papers from citizens of Texas, requiring all persons elected to office in Texas to take the oath required by the twelth section of the State constitution. Letter from the Secretary of	6	.....	60	
War, transmitting report of the Adjutant General recommending the adoption of a system of military prisons, and submitting a draught of a proposed law upon the subject. Letter from the Secretary of	6	.....	61	
War, in answer to a resolution of the House of Representatives of December 13 relative to a survey of the Housatonic River. Letter from the Secretary of	6	.....	62	

Title.	Vol.	Part.	No.	Page.
War, in answer to a resolution of the House of Representatives of December 11, transmitting report upon the condition of the breakwater at Hyannis, Massachusetts. Letter from the Secretary of	6	.....	63	
War, transmitting report from the Quartermaster General relative to a piece of land purchased for the burial of officers and soldiers, and now desired by the "Beneficial Society of the Laboring Sons of Cumberland." Letter from the Secretary of	6	.....	64	
War, transmitting papers relating to the claim of the estate of the late Commodore Thomas Ap C. Jones. Letter from the Secretary of	6	.....	58	
War, in answer to a resolution of the House of Representatives of December 20, 1869, transmitting report of Chief of Engineers relative to the cost of cutting a channel through Hallett's Point, at the head of Long Island. Letter from the Secretary of	6	.....	66	
War, transmitting an estimate of appropriations required for the service of the War Department for fiscal year ending June 30, 1871. Letter from the Secretary of	6	.....	80	
War, relative to survivors of the war of 1812. Letter from the Secretary of	6	.....	85	
War, transmitting estimates of appropriations required to meet deficiencies for the service of that Department for fiscal years ending June 30, 1869 and 1870. Letter from the Secretary of	6	.....	86	
War, in answer to a resolution of the House of Representatives of January 17, transmitting report of Chief of Engineers upon the condition of the harbor of Black Lake, Michigan. Letter from the Secretary of	6	.....	88	
War, transmitting a copy of the report of the Judge Advocate General upon the case of First Lieutenant W. J. Keays, of Sixteenth New York cavalry. Letter from the Secretary of	6	.....	105	
War, transmitting communication from Chief of Ordnance Department relative to the necessity of a larger clerical force than is provided for in the pending appropriation bill. Letter from the Secretary of	6	.....	106	
War, transmitting copy of report of the Attorney General on the case of James Belger. Letter from the Secretary of	6	.....	72	
War, transmitting statement of contingent expenses of his Department for the year 1869. Letter from the Secretary of	6	.....	78	
War, in answer to resolution of the House of Representatives of January 25 relative to the accounts of the Nashville and Decatur Railroad Company. Letter from the Secretary of	6	.....	109	
War, in answer to a resolution of the House of Representatives of February 17, 1869, transmitting report of Chief of Engineers upon the proposed improvement of the harbor of Chicago. Letter from the Secretary of	6	.....	114	
War, in answer to a resolution of the House of Representatives of February 2 in relation to report of the commission to prepare plans and estimates for a new War Department building. Letter from the Secretary of	6	.....	116	
War, in answer to a resolution of the House of Representatives of January 27, transmitting report of General Warren relative to the improvement of Mississippi River, at or near the Falls of St. Anthony. Letter from the Secretary of	6	.....	118	
War, in answer to resolution of the House of Representatives of January 31, transmitting report of Chief of Ordnance as to the quantity of copper, &c., now on hand in the various arsenals. Letter from the Secretary of	6	.....	119	

Title.	Vol.	Part.	No.	Page.
War, relative to the bounty decision of the Supreme Court. Letter from the Secretary of	11	.....	253	
War, relative to the improvement of the grounds owned by the United States in the city of Buffalo, known as Fort Porter. Letter from the Secretary of	11	.....	256	
War, relative to a suit brought against Grenville M. Dodge in the State courts of Kansas. Letter from the Secretary of	12	.....	258	
War, transmitting statement of headquarter expenses of generals of the Army. Letter from the Secretary of	12	.....	262	
War, in answer to a resolution of the House transmitting report of engineer upon the improvements of the harbor at Oswego, New York. Letter from the Secretary of	12	.....	263	
War, in answer to a resolution of the House relative to expenditures on Boston and New York harbors, &c. Letter from the Secretary of	12	.....	264	
War, in answer to a resolution of the House transmitting copy of returns of the election held in the second congressional district of Texas. Letter from the Secretary of	12	.....	265	
War, relative to the transfer of the United States steamer Illinois to New York for quarantine purposes. Letter from the Secretary of	12	.....	268	
War, in answer to resolution of the House relative to the late expedition against Piegan Indians. Letter from the Secretary of	12	.....	269	
War, transmitting report of the board of engineers of experiments connected with an efficient system of sea-coast defenses. Letter from the Secretary of	12	.....	271	
War, transmitting petition of Benjamin F. Reynolds for relief. Letter from the Secretary of	12	.....	274	
War, transmitting report of Chief of Engineers relative to the continuation of explorations of the Colorado River. Letter from the Secretary of	12	.....	281	
War, in answer to a resolution of the House relative to the improvement of the Upper Mississippi River. Letter from the Secretary of	12	.....	285	
War, relative to the claim of Thomas W. Fry, jr. Letter from the Secretary of	12	.....	287	
War, in answer to a resolution of the House transmitting copies of General Terry's report on Georgia. Letter from the Secretary of	12	.....	288	
War, relative to the claim of Black Beaver, a Delaware Indian. Letter from the Secretary of	12	.....	290	
War, in answer to a resolution of the House transmitting copy of a report by S. T. Abert on the condition of the Arkansas River. Letter from the Secretary of	12	.....	295	
War, relative to the claim of Alexander Dunbar. Letter from the Secretary of	12	.....	302	
War, transmitting report of Chief of Engineers relative to Point San José military reservation in California. Letter from the Secretary of	12	.....	305	
Whiskies, Commissioner of Internal Revenue answers the House relative to the quantity of fine, distilled during September to December 1868, &c	6	.....	87	
Wisconsin. Secretary of War answers the House relative to survey of the harbor at Port Washington, in	5	.....	28	
Wyoming. Secretary of the Interior submits estimates of appropriations for expenses of surveyor's office in the Territory of	12	.....	259	
Wyoming. Secretary of the Interior transmits letter from the governor of the Territory of, relative to a penitentiary building in	12	.....	306	
Y.				
Yards and Docks, of the operations of his Bureau during the year 1869. Report of the Chief of the Bureau of	2	1	1	211

Title.	Vol.	Part.	No.	Page.
Papers accompanying the above.				
Improvements and repairs, navy yard, Portsmouth, New Hampshire	2	1	1	211
Improvements and repairs, navy yard, Boston, Massachusetts	2	1	1	211
Improvements and repairs, navy yard, Brooklyn, New York	2	1	1	212
Improvements and repairs, navy yard, Philadelphia, Pennsylvania	2	1	1	213
Improvements and repairs, navy yard, Washington, District of Columbia	2	1	1	213
Improvements and repairs, navy yard, Norfolk, Virginia	2	1	1	214
Report of Board of Naval Officers on the subject of Navy pensions	2	1	1	233
Capture of New Orleans. Correspondence relative to the	2	1	1	238

41ST CONGRESS, 2d Session. } HOUSE OF REPRESENTATIVES. { Ex. DOC. No. 102.

ANNUAL REPORT

OF THE

COMMISSIONER OF PATENTS

FOR

THE YEAR 1869.

VOLUME III.

WASHINGTON:
GOVERNMENT PRINTING OFFICE
1871.

IN THE SENATE OF THE UNITED STATES,
April 10, 1869.

Resolved by the Senate, (the House of Representatives concurring,) That there be printed 4,000 extra copies of the annual report of the Commissioner of Patents for 1869 for the use of the Senate; 10,000 extra copies of the same for the use of the House; and 5,000 extra copies of the same for distribution by the Commissioner of Patents.

Attest:

GEO. C. GORHAM,
Secretary,
By W. J. McDONALD,
Chief Clerk.

IN THE HOUSE OF REPRESENTATIVES U. S.,
February 21, 1870.

Resolved, That the House concur in the foregoing resolution of the Senate to print 4,000 extra copies of the annual report of the Commissioner of Patents for 1869 for the use of the Senate; and 10,000 extra copies of the same for the use of the House; and 5,000 extra copies of the same for distribution by the Commissioner of Patents.

Attest:

EDWARD McPHERSON,
Clerk,
By CLINTON LLOYD,
Chief Clerk.

ILLUSTRATIONS OF PATENTS.

Fig. 2 Fig. 1

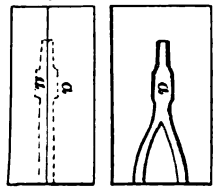

85503—G. R. Andrus—*Die.*

85504—S. J. Baird—*Motive Power for Sewing Machines.*

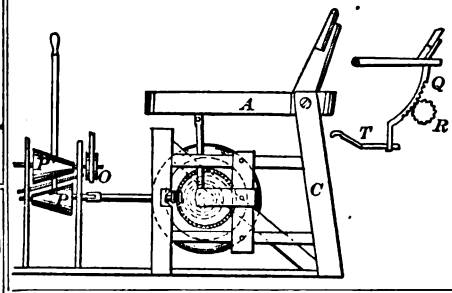

85505—S. J. Baird—*Motive Power for Sewing Machines.*

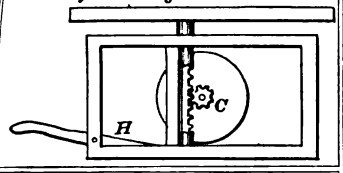

85506—A. T. Barnes—*Fence.*

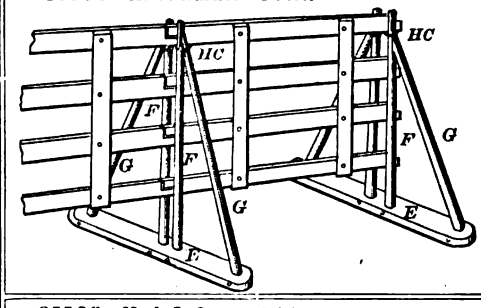

85508—J. Beach—*Wind Wheel.*

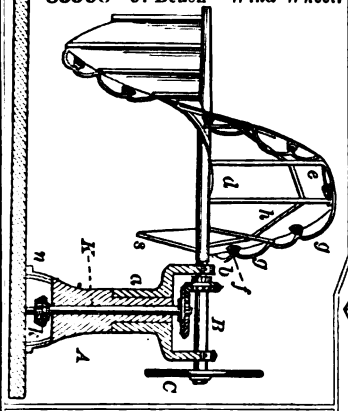

85509—N. & J. Carr—*Cultivator.*

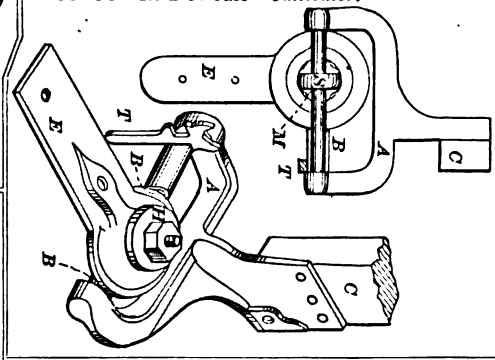

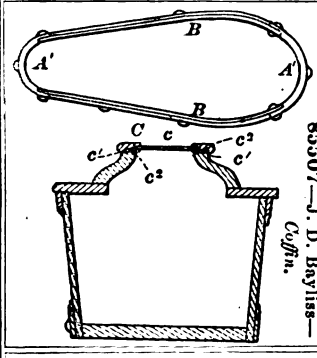

85507—J. D. Bayliss—*Coffin.*

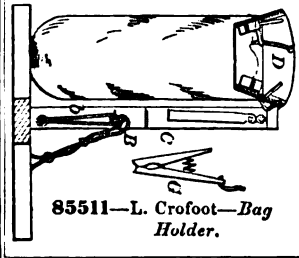

85511—L. Crofoot—*Bag Holder.*

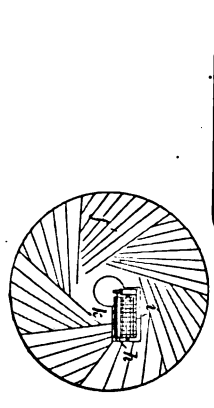

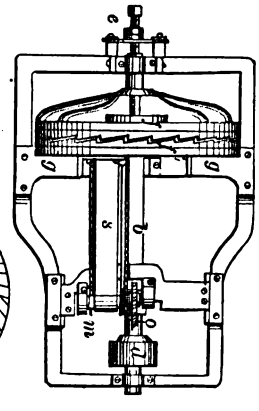

85512—A. E. Crosby—*Rag Cutting Machine.*

85510—T. Critchlow—*For Repairing Blowing Engines.*

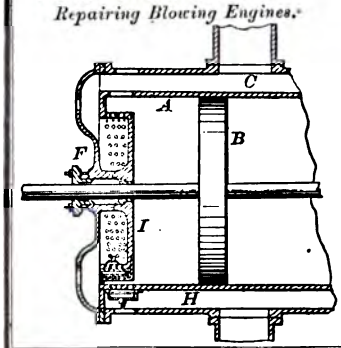

85513—A. E. Crosby—*Rag Cutting Machine.*

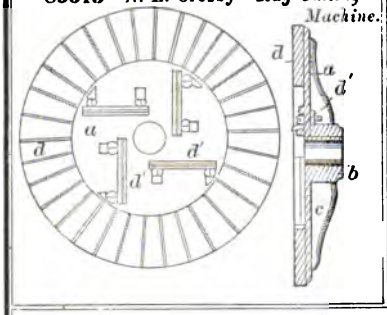

85517—D. S. Evans—*Pump.*

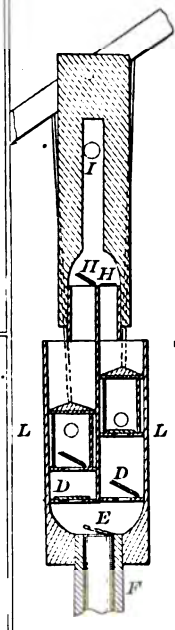

85518—J. W. Evans—*Car Spring Box.*

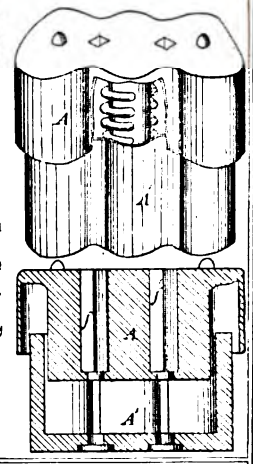

85521—O H. Gardner—*Oil Can.*

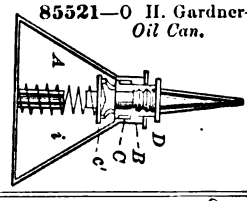

85514—J. R. Cross—*Skipping Rope.*

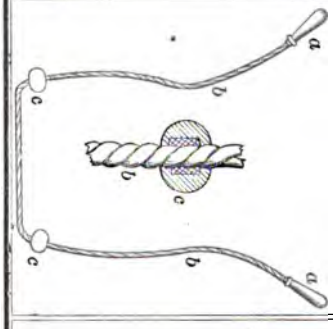

85516—T. Duncanson—*Corn Planter.*

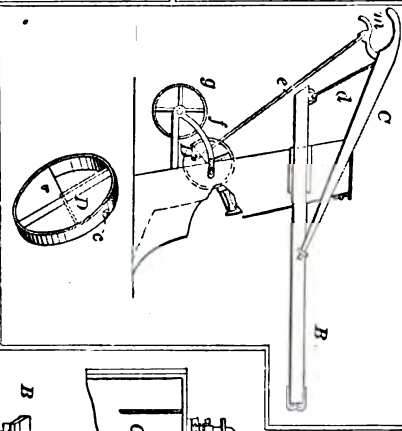

85515—H. B. Denny—*Printing Press.*

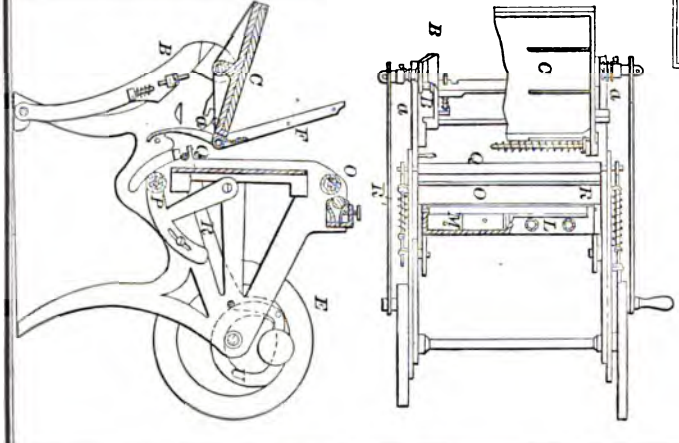

85519—B. Foltz—*Carriage Pole Iron.*

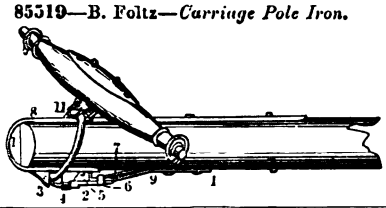

85520—T. Fowler—*For Making Wire.*

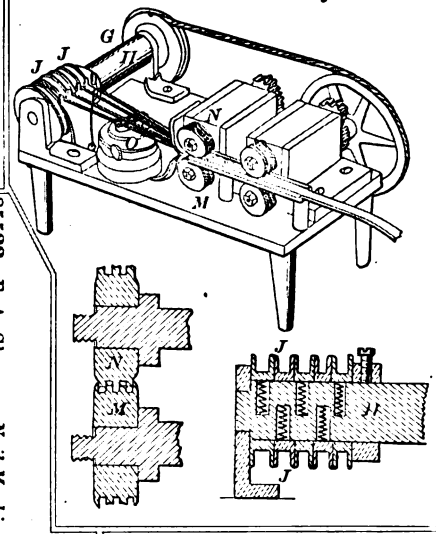

85522—F. A. Gleason—*Nail Machine.*

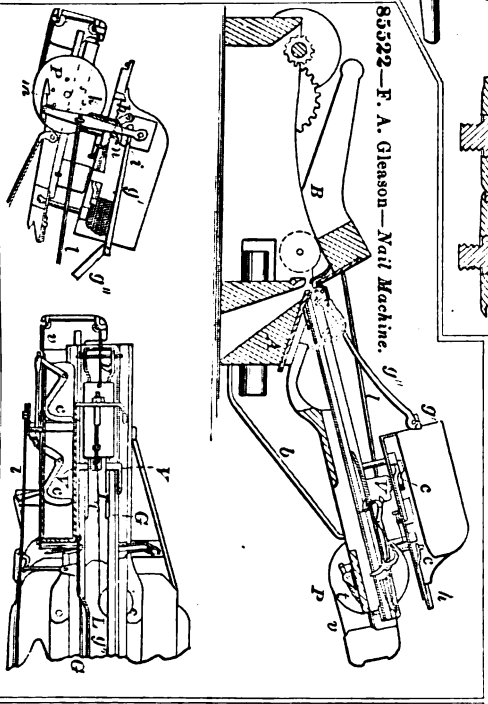

85523—G. Gunther—*Bird Cage.*

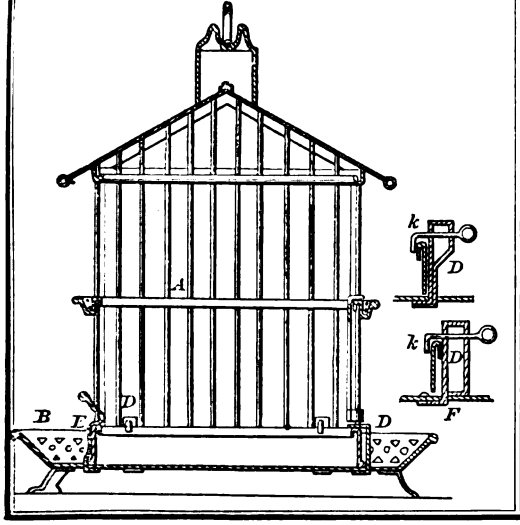

85524—T. G. Hall—*Seed Sower.*

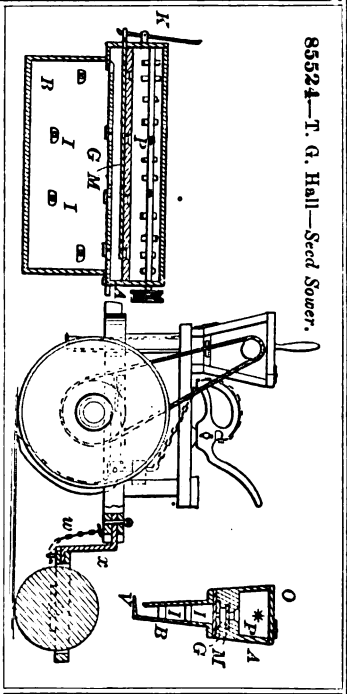

85525—A. Hathaway—*Ruling Pen.*

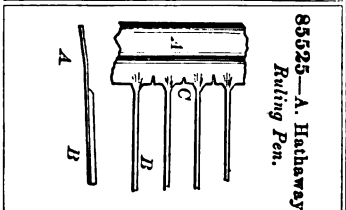

85526—F. Hinckel—*For Washing Shavings in Breweries.*

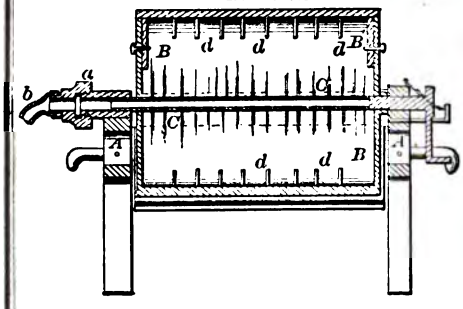

85527—J. H. Irwin—*Velocipede.*

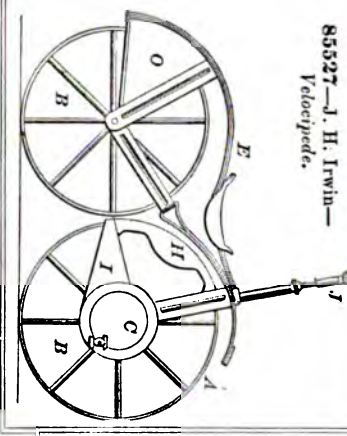

85528—A. Kusenberg—*Sugar Draining Machine.*

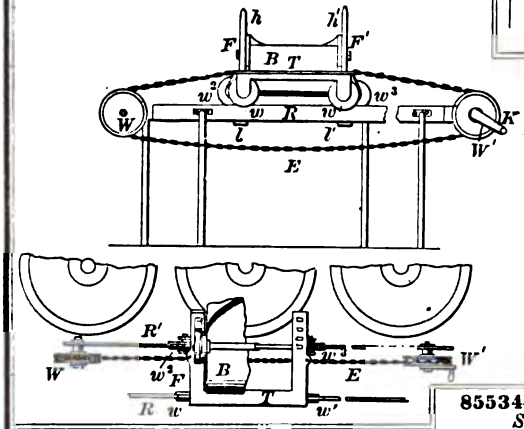

85531—W. J. McLee—*For Bending Sheet Metal.*

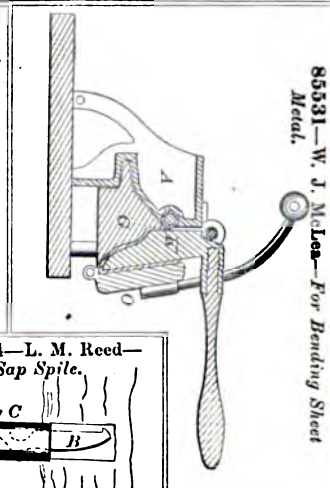

85534—L. M. Reed—*Sap Spile.*

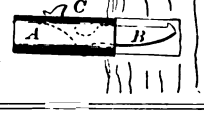

85532—A. Pettingill—*Cotton Picker.*

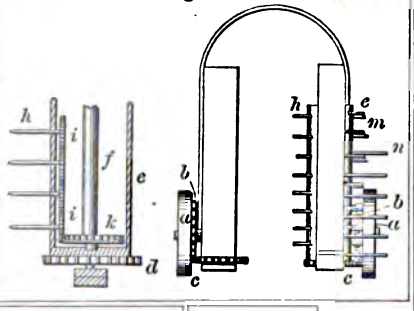

85530—J. H. Littlefield—*Press and Strainer.*

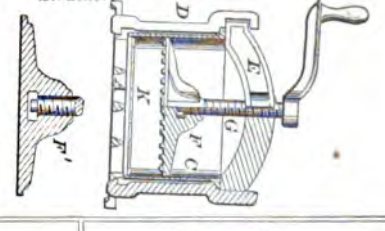

85533—L. M. Reed—*Plowshare.*

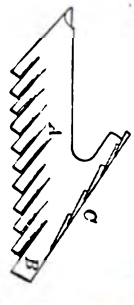

85538—A. M. Sawyer—*Polishing Wheel.*

85535—W. H. Robinson—*Button Hole for Paper Collars.*

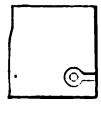

85537—A. M. Sawyer—*Emery Wheel.*

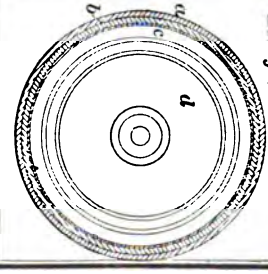

85536—H. Rockwell—*Steam Engine.*

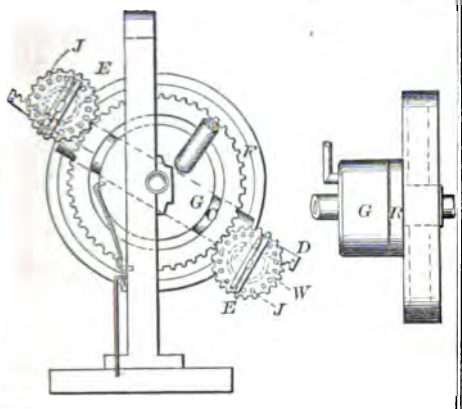

85543—B. R. Stevens—*Log Canting Apparatus.*

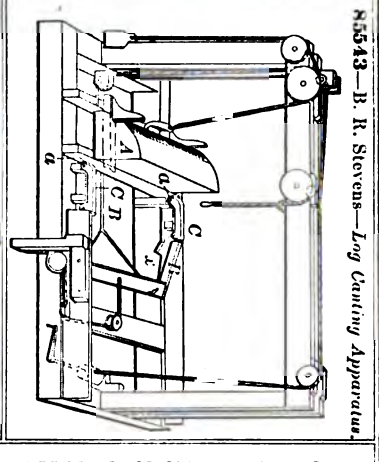

85539—H. Seher—*Playing Table.*

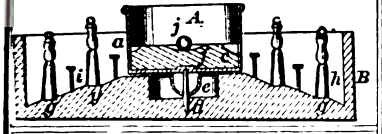

85540—D. M. Skinner—*Coffee Pot.*

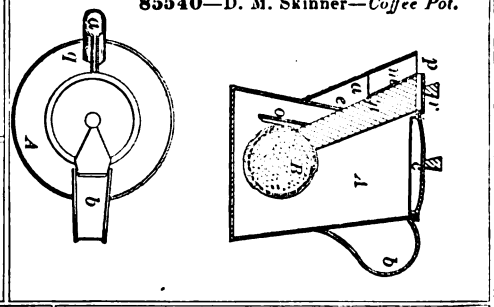

85541—E. A. Smead—*Whiffletree.*

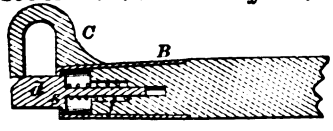

85544—G. A. Stewart—*School Desk and Seat.*

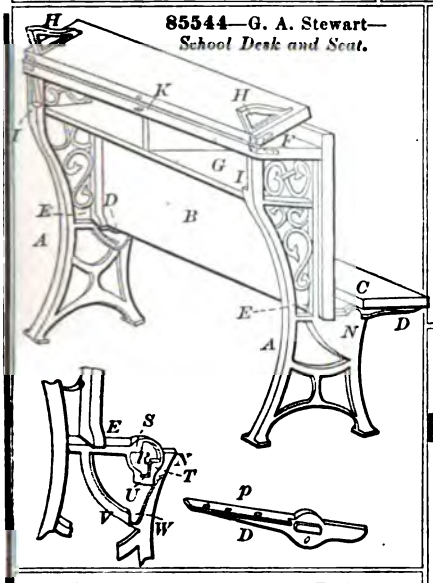

85542—E. W. Sperry—*For Producing Twist in Table Cutlery, Spoons, &c.*

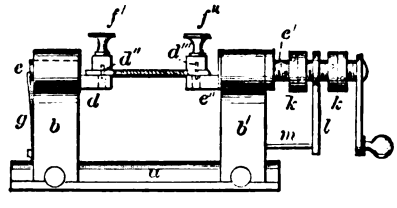

85546—W. A. Tangeman—*Knitting Machine.*

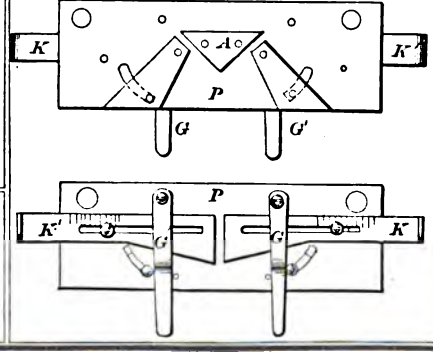

85545—E. Sullivan—*Reaming Tool.*

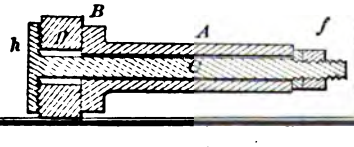

85547—J. L. True—*Potato Planter.*

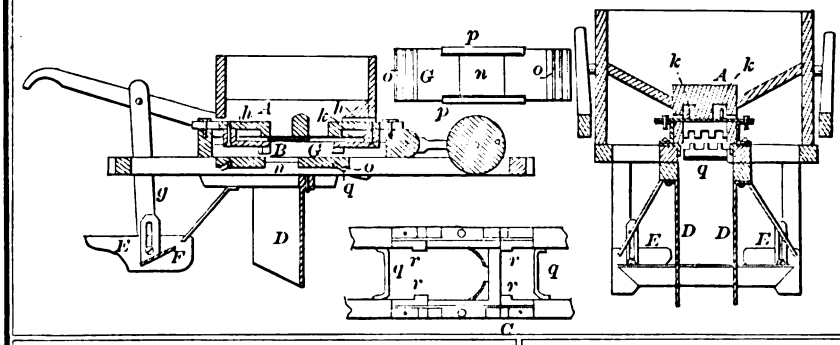

85548—J. Underwood—*Pump.*

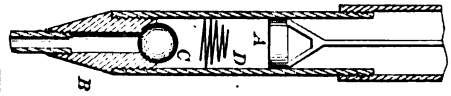

85549—Voss & Anderson—*Mandrel for Coiling Springs.*

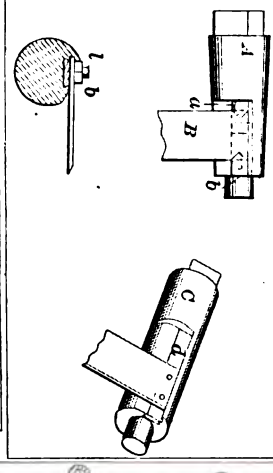

85551—J. T. Whipple—*Butter Worker, &c.*

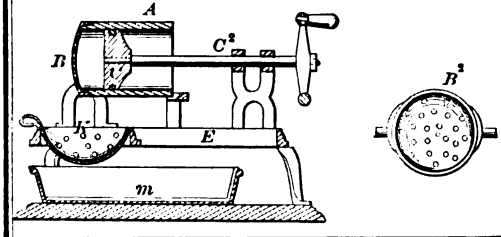

85550—J. J. Walser—*Paper Ruling Machine.*

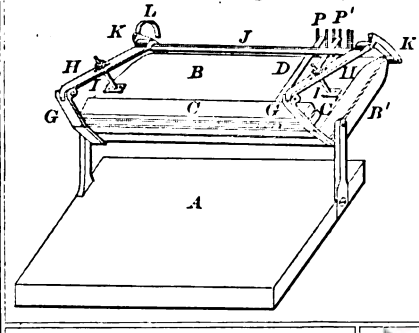

85552—A. E. Whitmore—*Lathe.*

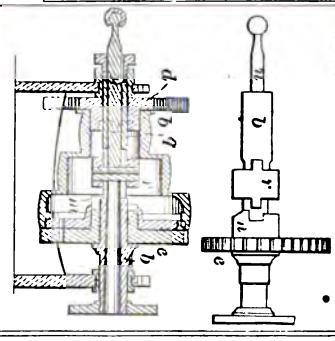

85553—F. A. Adams—*Caliper, Rule and Wire Gauge.*

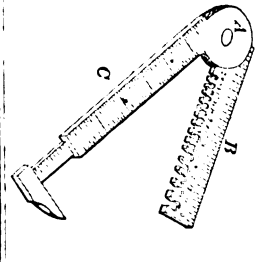

85554—W. Allchin—*Hot Air Drum.*

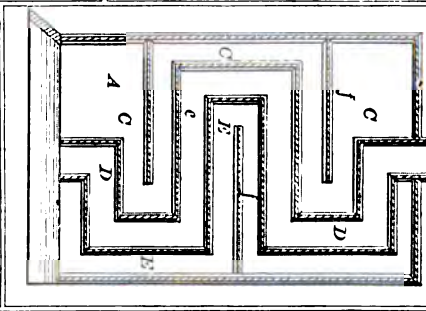

85555—S. S. Allen—*Gate.*

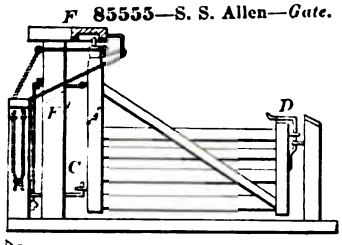

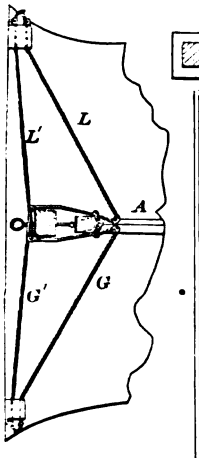

85556—Bennett & Vine—*Carding Machine.*

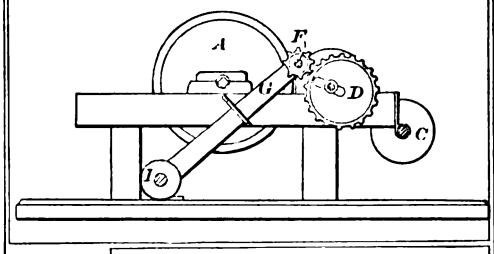

85557—S. S. Bent—*Dog Kennel.*

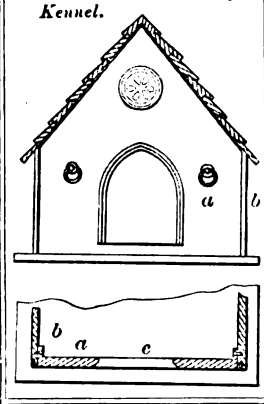

85564—T. E. Coles—*Hot Air Furnace.*

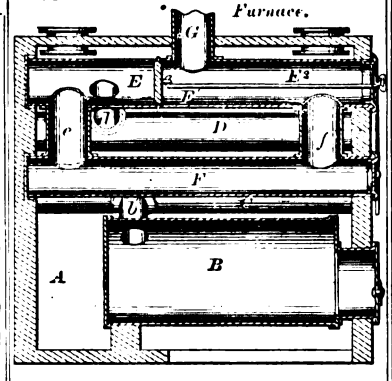

85563—J. S. Coen—*Corn Planter.*

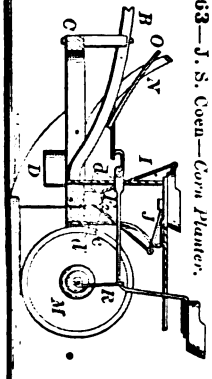

85560—E. & F. Borse & Neuberger—*Bed Lounge.*

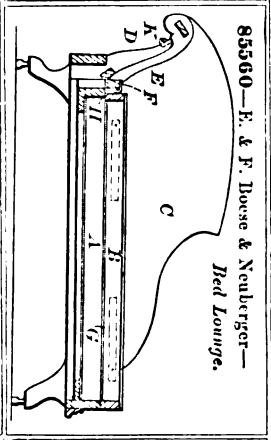

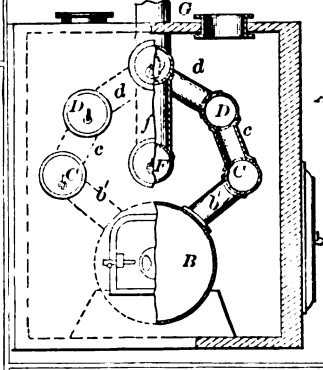

85559—M. S. Bolt—*Pipe Connection in Railroad Car Heaters.*

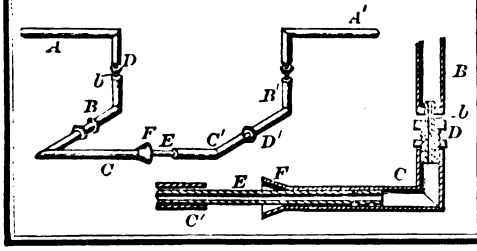

85558—R. Blackwood—*For Piercing Stitch Holes.*

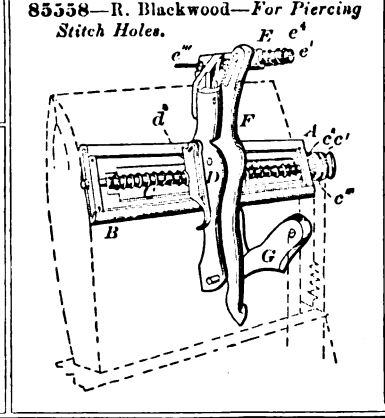

85561—F. A. Brown—*Piston Packing.*

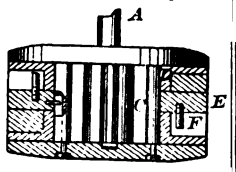

85566—G. H. Corliss—*Steam Pressure Regulator.*

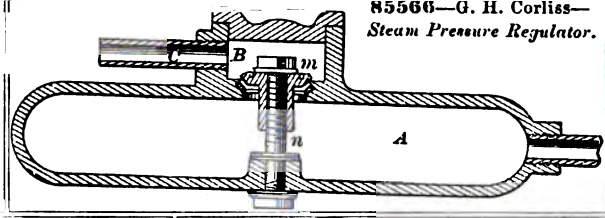

85562—A. J. Chase—*Clothes Dryer.*

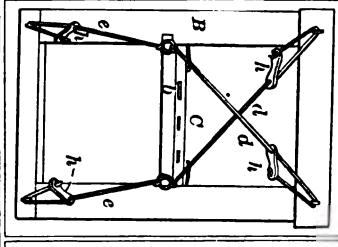

85567—G. H. Corliss—*Steam Trap.*

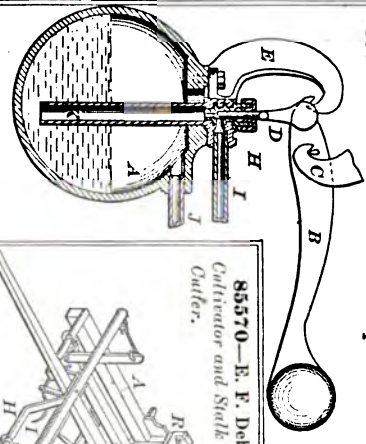

85565—G. Corey—*Tobacco Pipe.*

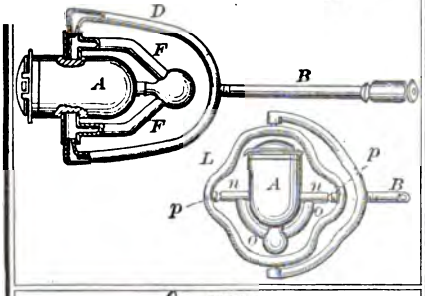

85570—E. F. Debart—*Cultivator and Stalk Cutter.*

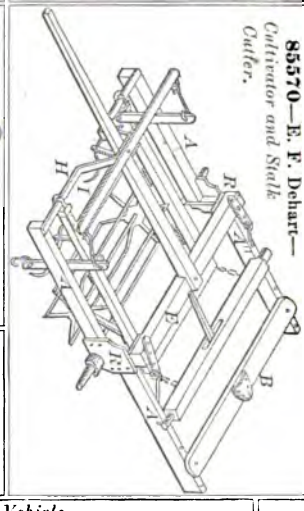

85568—Crandell & Braman—*Tack Hammer.*

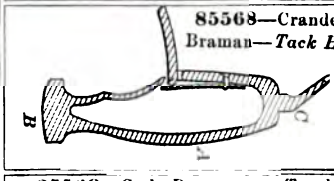

85571—J. Densmore, Sr.—*Exhaust Device for Locomotive Engines.*

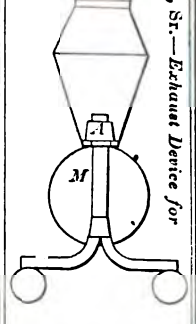

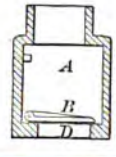

85569—C. de Damseaux—*Track Laying Vehicle.*

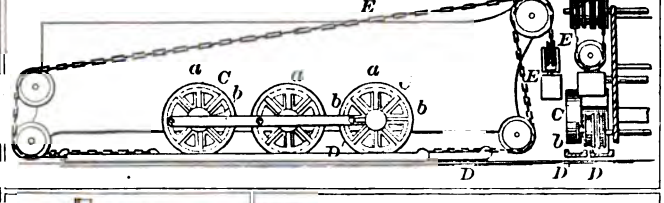

85572—A. L. Dewey—*Toy Steam Engine.*

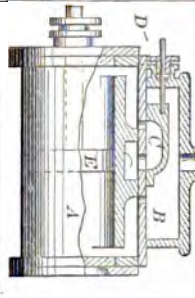

85575—M. D. Drake—*Belt Punch.*

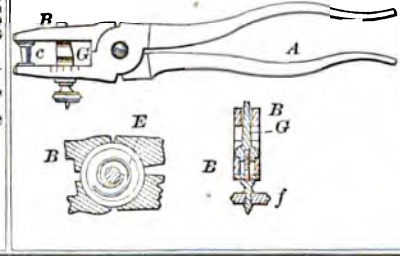

85573—C. S. Dole—*For Unloading Grain from Wagons.*

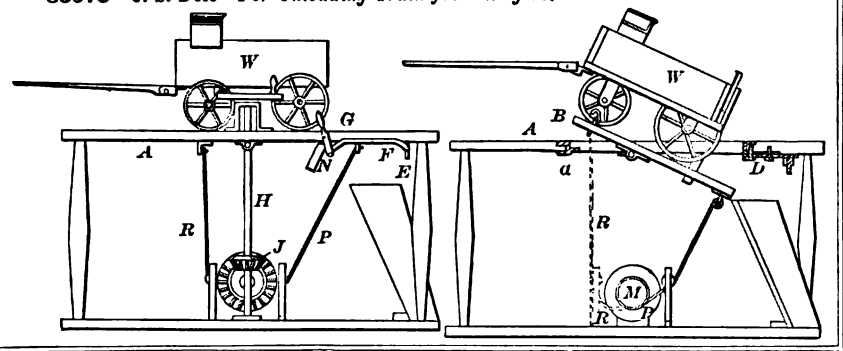

85574—T. D. Dotterer—*For Sowing Rice.*

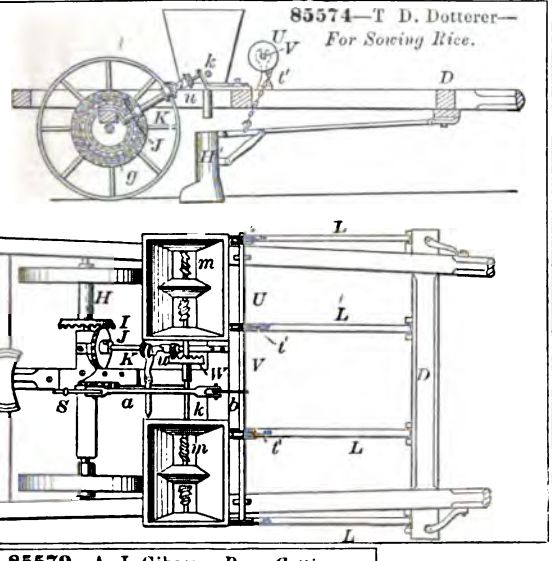

85577—Forrester & Luddington—*Pump.*

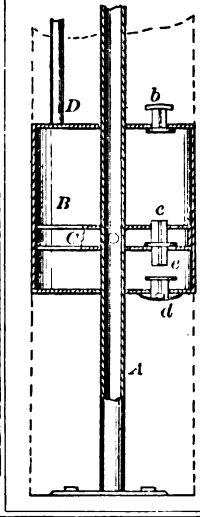

85579—A. J. Gibson—*Bung Cutting Machine.*

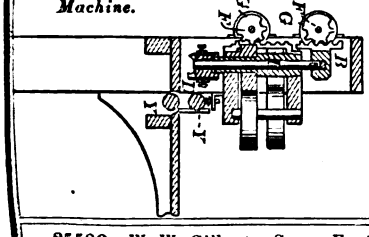

85578—C. F. Gay—*Horse Power.*

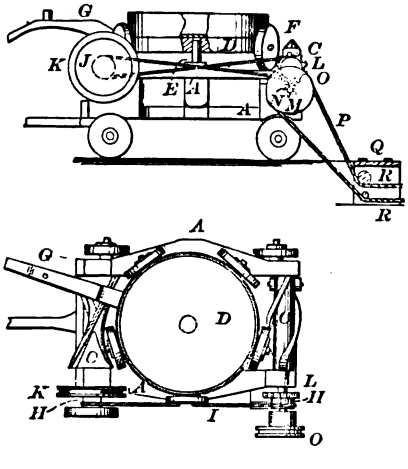

85580—W. W. Gilbert—*Steam Engine Governor.*

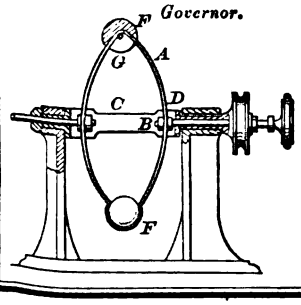

85581—W. B. Goodwin—*Corn Planter.*

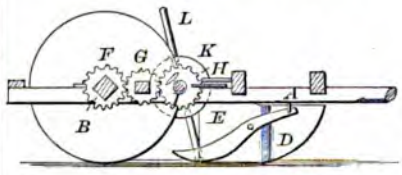

85582—I. J. Halsted—*Expanding Harrow.*

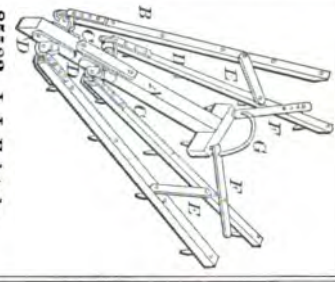

85583—R. Hardie—*Slide Valve.*

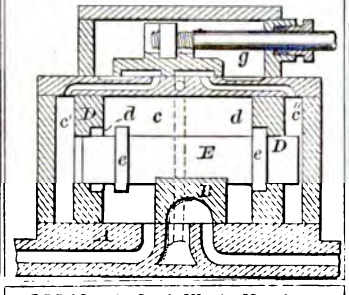

85585—H. Harris—*Corn Harvester.*

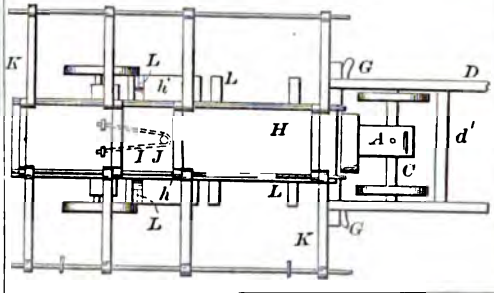

85587—A. L. & W. A. Hatch—*Hop Pole Puller.*

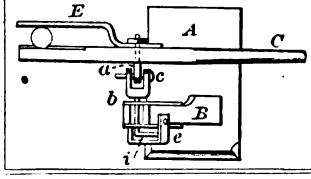

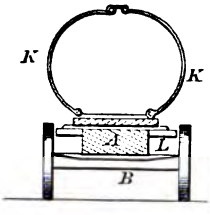

85586—H. Haslam—*Sash Fastener.*

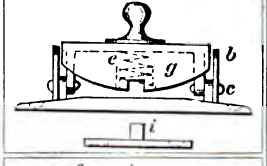

85589—G. H. Hawkins—*Manufacture of Dolls' Heads.*

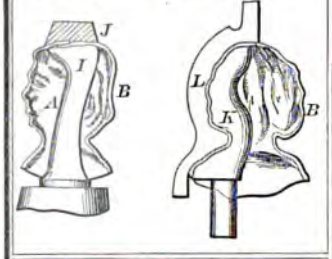

85596—W. K. Leach—*Atomizing Tube.*

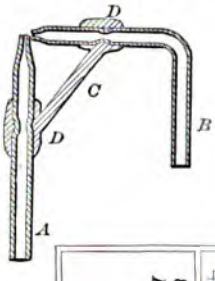

85590—J. M. Hawley—*Corn Sheller.*

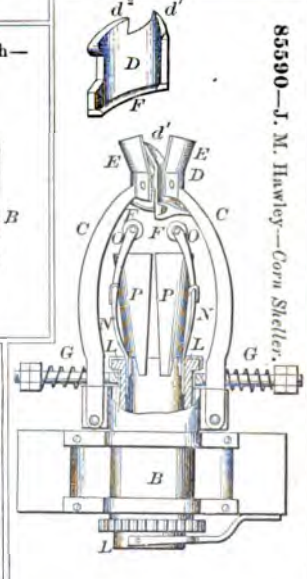

85594—J. King—*Churn.*

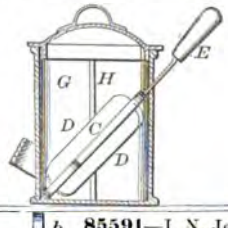

85588—J. T. Haviland—*Bottle Stopper*

85591—I. N. Jennings—*Pulverizer.*

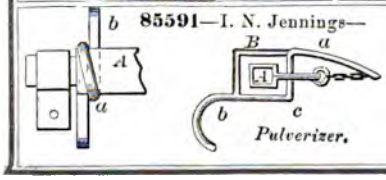

85593—W. D. Jones—*Corn Husking Machine.*

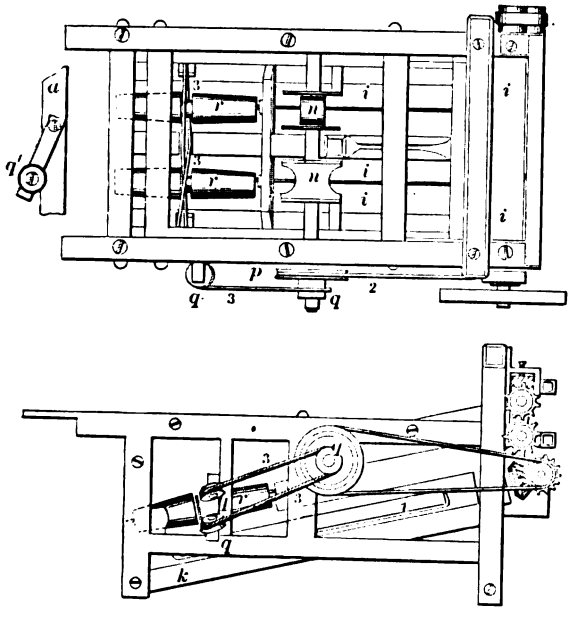

85595—P. Lambkin—*Fence.*

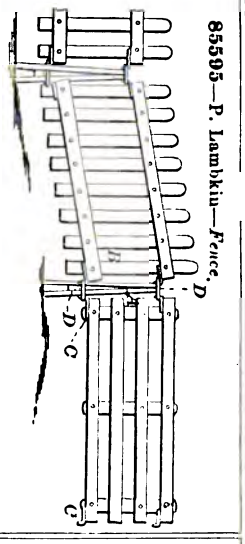

85598—S. Lewis—*Still Water Dam.*

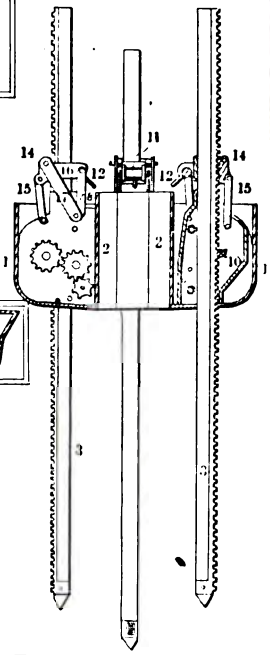

85597—S. Lewis—*Subaqueous Drilling Machine.*

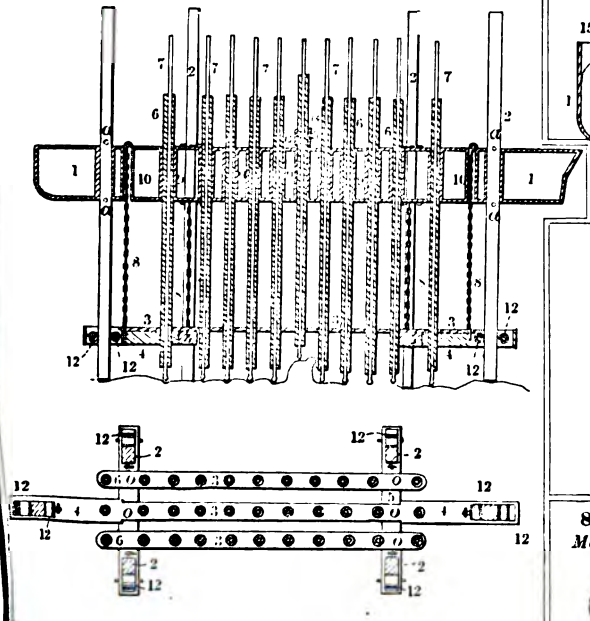

85600—W. C. Michaelis—*Mounting for Artificial Teeth.*

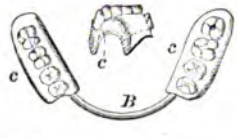

85599—S. Markel—*Vegetable Slicer.*

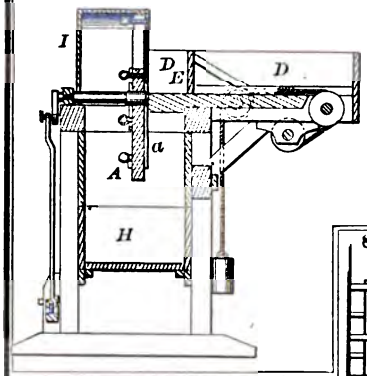

85601—J. W. Monical—*Plow Attachment.*

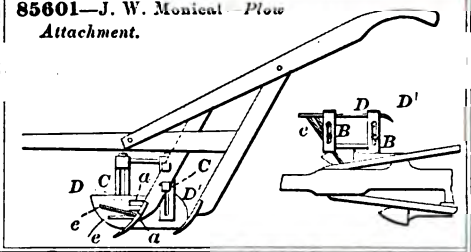

85602—A. T. Morris—*Grapple and Excavator.*

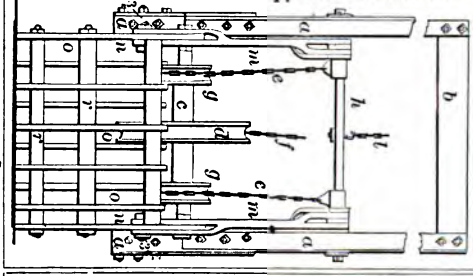

85604—M. J. Mosher—*Stove.*

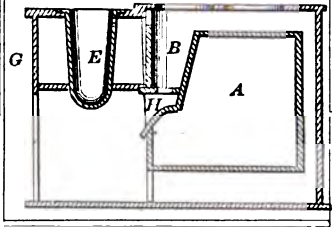

85603—M. J. Mosher—*Stove.*

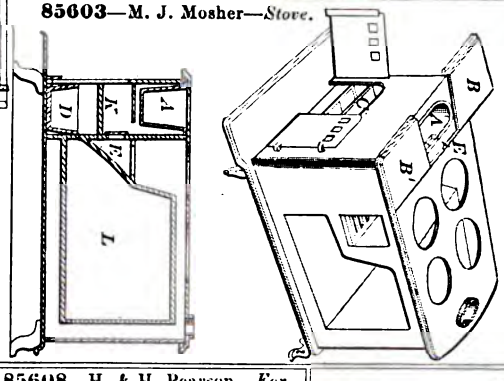

85605—J. Musgrove—*Pudding Mould.*

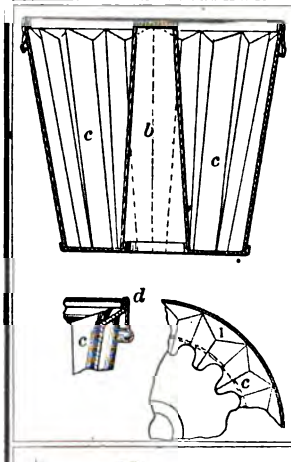

85608—H. & H. Pearson—*For Tightening Tires.*

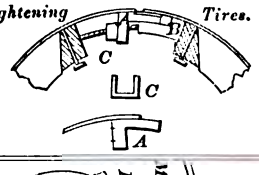

85607—H. S. Otis—*Gate.*

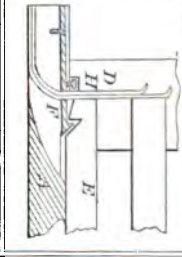

85609—N. Peck—*Earth Scraper.*

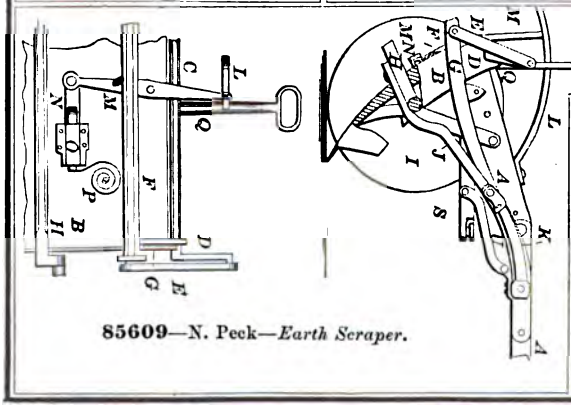

85606—D. Neahr—*Piston Rod Packing.*

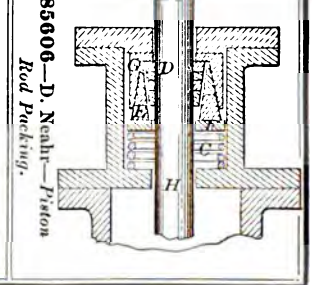

85610—C. R. & B. A. Peden—*Grain Toller.*

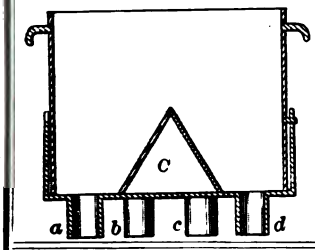

85611—Perkins, Bogert & Lowell—*Window Sash.*

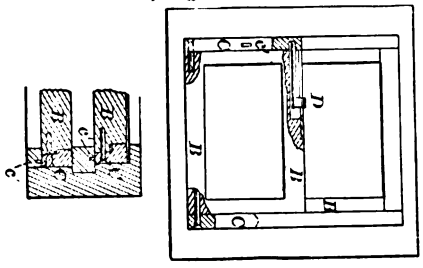

85614—W. Sanford—*Fireplace Heater.*

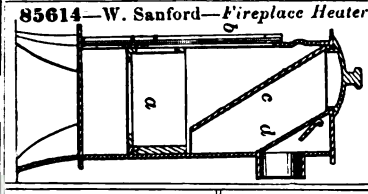

85615—C. Schiller—*Meat Cutter.*

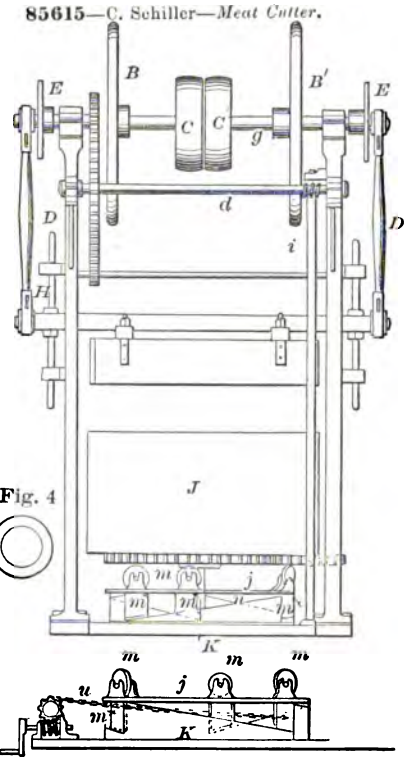

Fig. 4

85613—W. & D. Rinehart—*Tobacco Manufacture.*

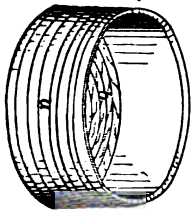

85612—Phillips, Dunham & Winans—*Sash Post for Rafts.*

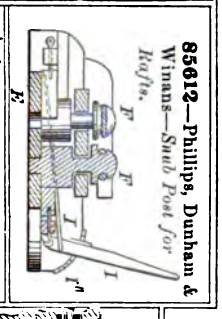

85616—P. Schuler—*Fire Arm.*

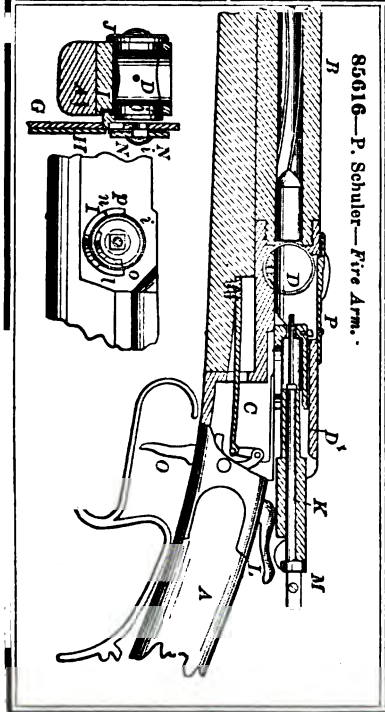

85617—H. Simons—*Trunk Bolt.*

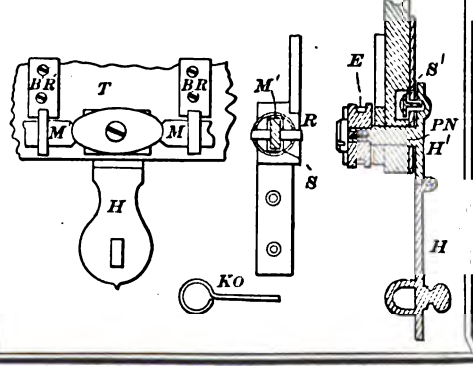

85618—R. L. Smith—*Twine Holder.*

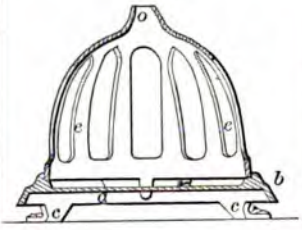

85621—Z. T. Sweet—*Gang Plow.*

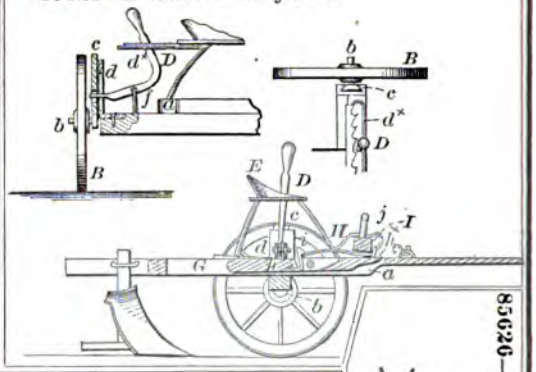

85620—J. C. Stoddard—*Horse Rake.*

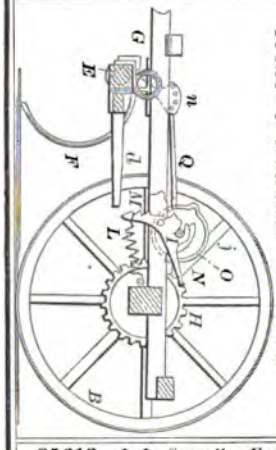

85630—P. A. Altmaier—*Padlock.*

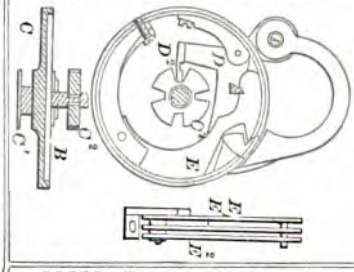

85626—W. H. Waite—*Tobacco Stopper.*

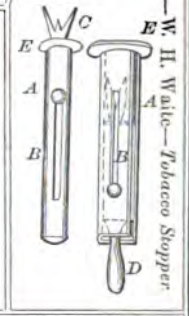

85619—J. L. Stegall—*For Sowing Pulverulent Manures.*

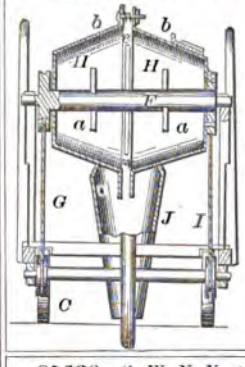

85625—Trask & Eldridge—*Shoe Heeling Machine.*

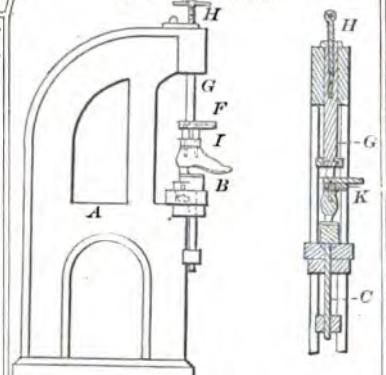

85622—J. Taylor—*Oil Well Cleaner.*

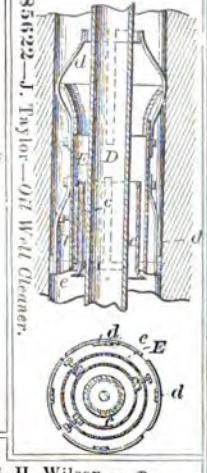

85628—G. W. N. Yost—*Harvester.*

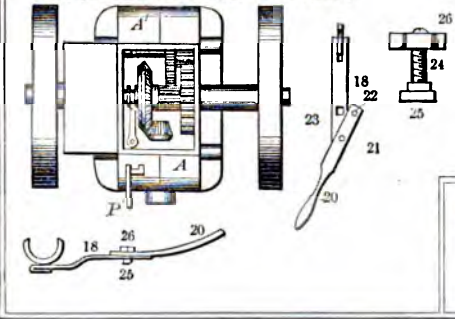

85627—S. H. Wilson—*Harvester Cutter Holder.*

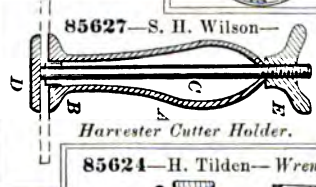

85624—H. Tilden—*Wrench.*

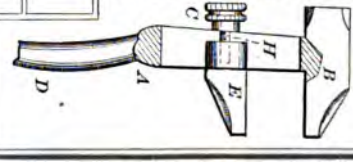

85629—Zufelt & Craig—*Hub Turning Machine.*

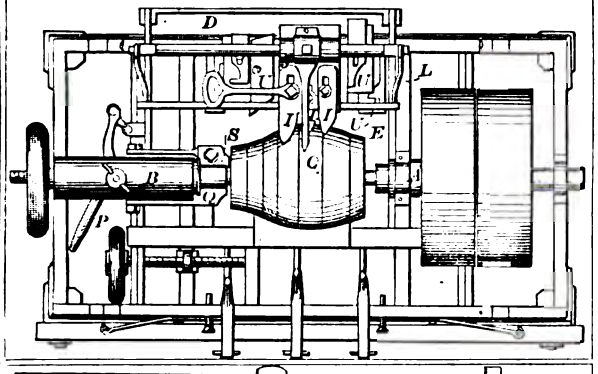

85631—S. H Anderson—

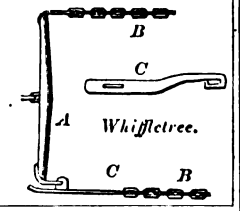

85635—I. W. Boatman—*Scraper.*

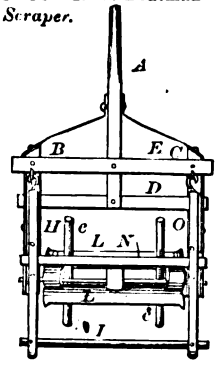

85632—W. Ashby—*Steam Engine Governor.*

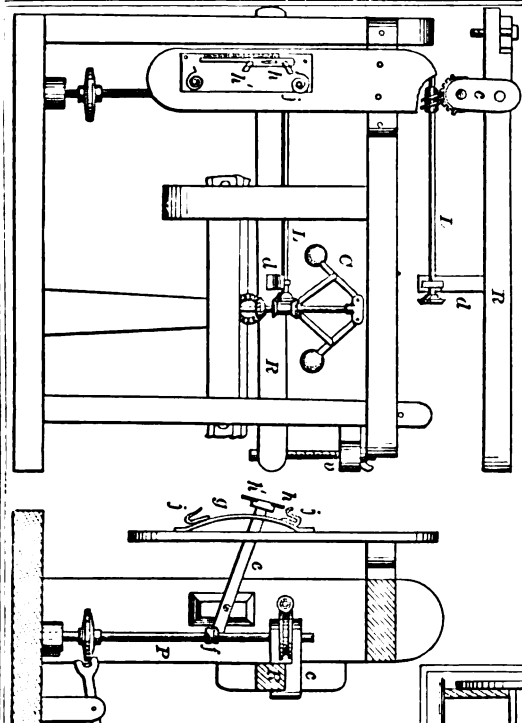

85636—D. F. Brandon—*Cigar Lighter.*

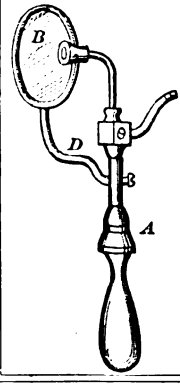

85634—T. Bingham—*Animal Trap.*

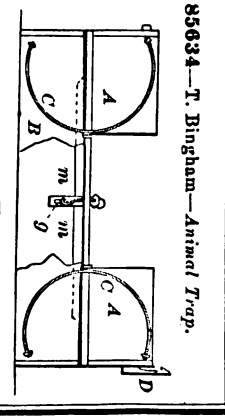

85637—H. Brooke—*Glass Mould.*

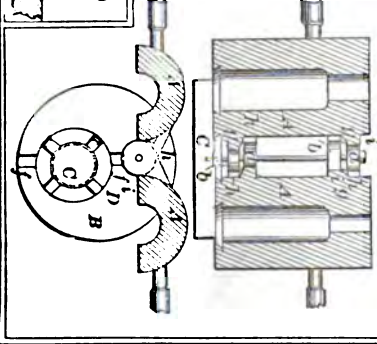

85633—M. M. Barnes—*Sewing Machine.*

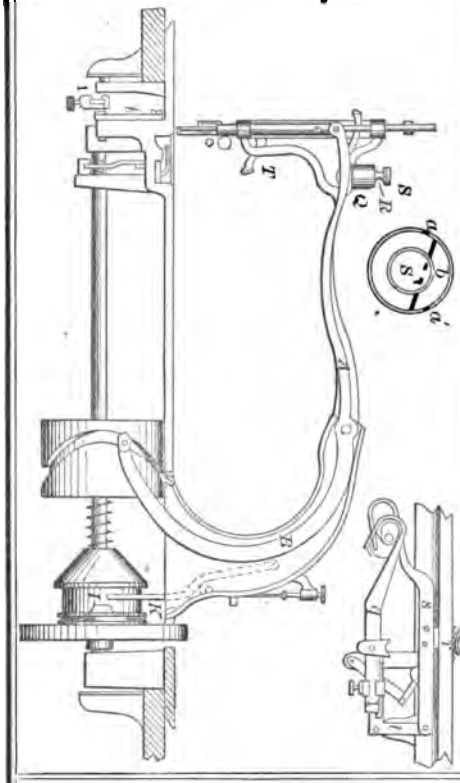

85641—E. P. H. Capron—*Land Roller.*

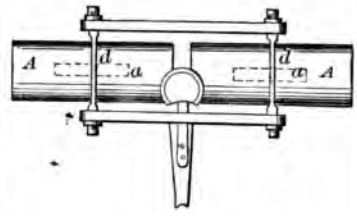

85643—S. P. Clemons—*Bag Holder.*

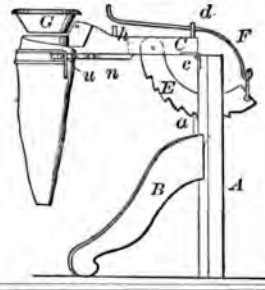

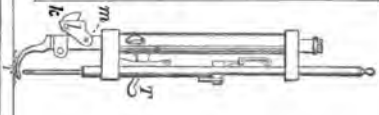

85638—E. & A. Buckman—*Toy.*

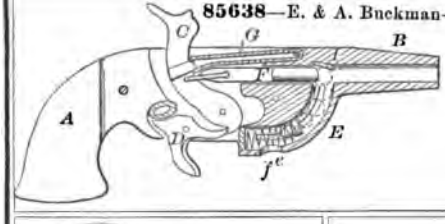

85644—W. H. Cloud—*Latch and Lock.*

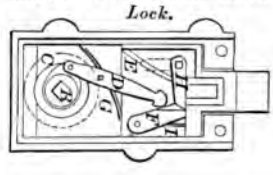

85640—C. Callaghan—*Velocipede.*

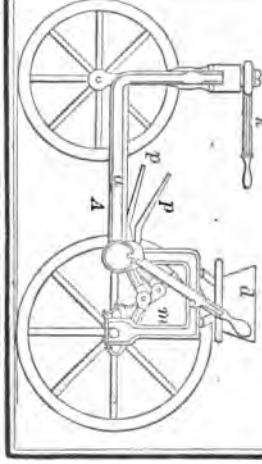

85646—P. Dolan—*Snap.*

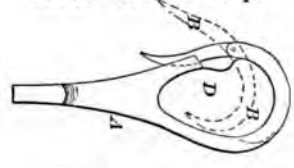

85639—W. M. Bush—*For Pulverizing Earth.*

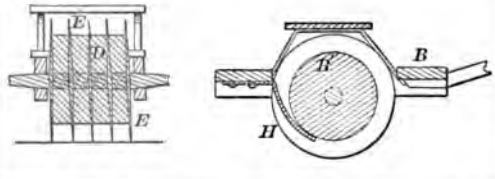

85645—J. W. Cochran—*Fire Arm.*

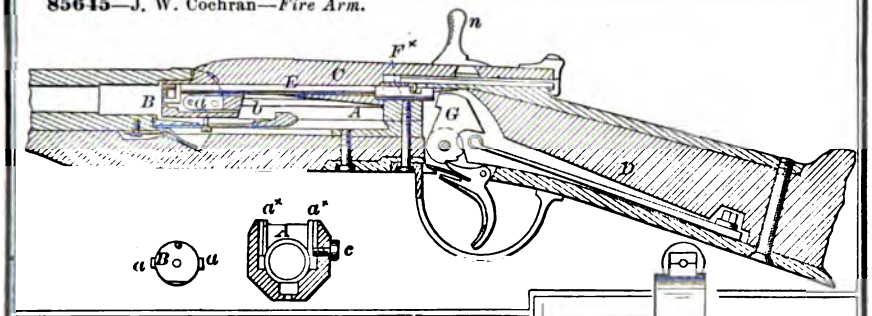

85647—T. Dolan—*Safe.*

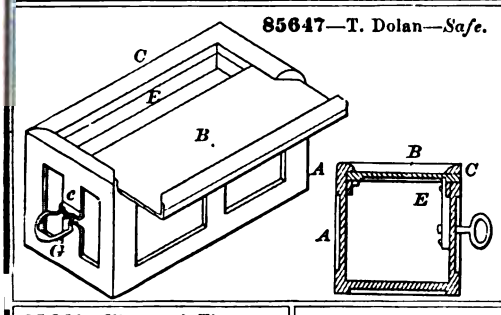

85648—J. H. Draper—*Planing Machine.*

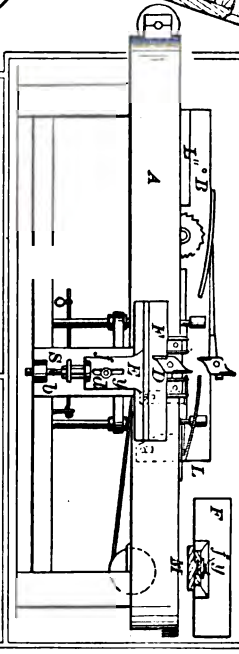

85651—Elarton & Thomas—*Hay Rake and Loader.*

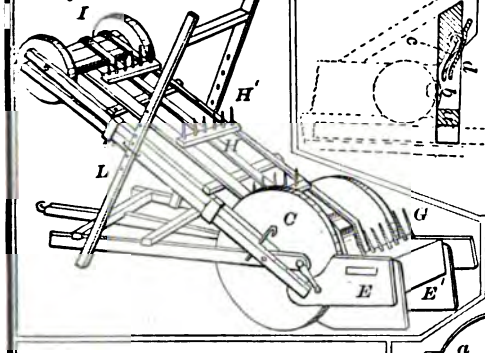

85652—J. Elbertson—*Corn Planter.*

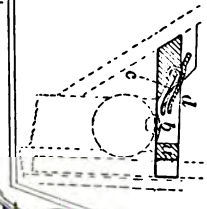

85649—I. T. Dyer—*Pickpocket Alarm.*

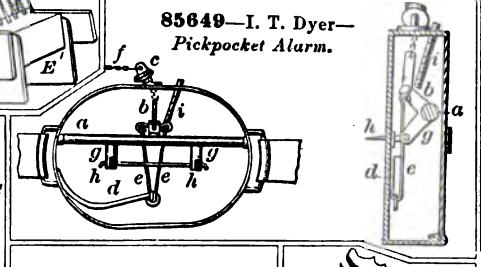

85655—H. Griffing—*For Feeding Steam Generators.*

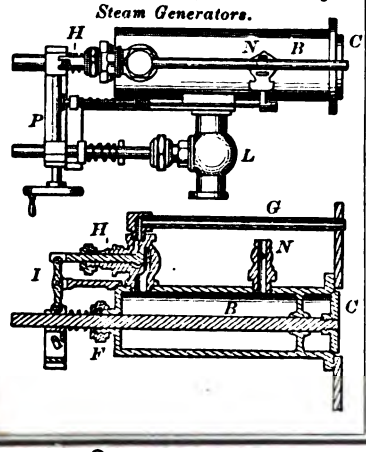

85658—A. J. Harrison—*Horse Hay Fork.*

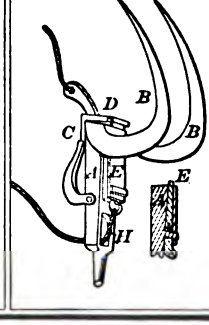

85653—E. B. Goodall—*Inserting Artificial Teeth.*

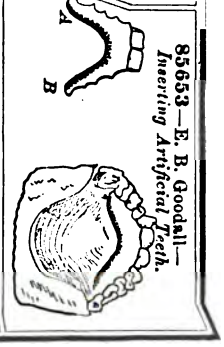

85654—Graves & Crandall—*Feather Renovator.*

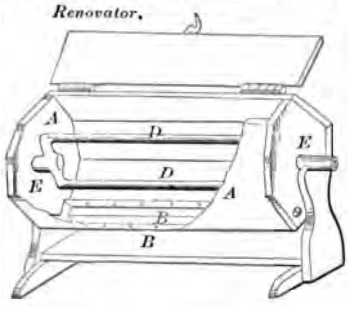

85660—J. Hegarty—*Molasses Gate.*

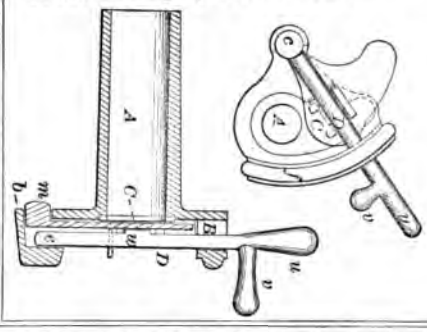

85656—J. Harris—*Fluid Meter.*

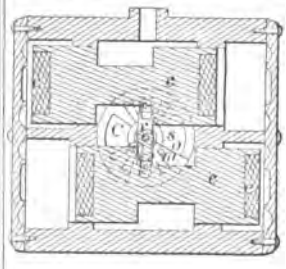

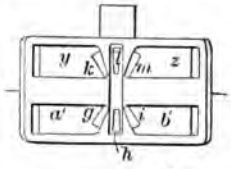

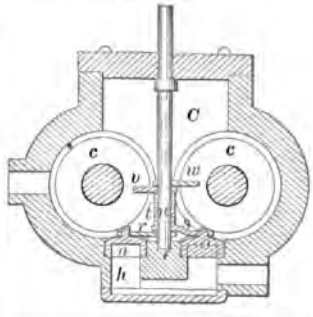

85661—C. H. Helms—*Punching Leather Stock.*

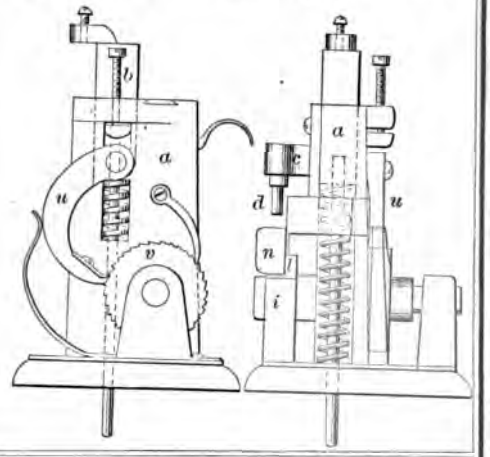

85663—S. A. Hill—*Hydro-Carbon Burner.*

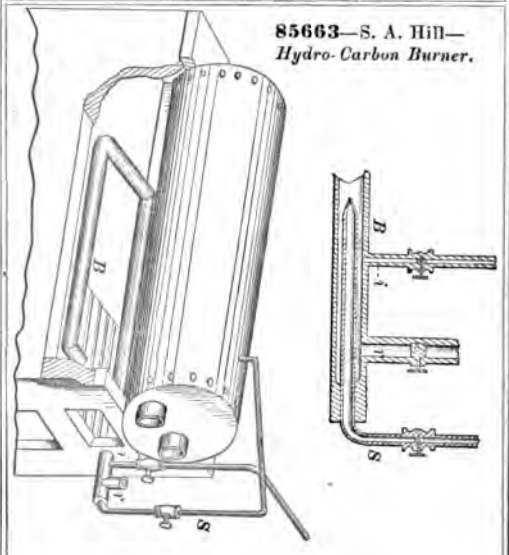

85664—C. Horel—*Stove Pipe Thimble.*

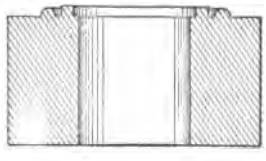

85662—R. H. Henry—*Cultivator.*

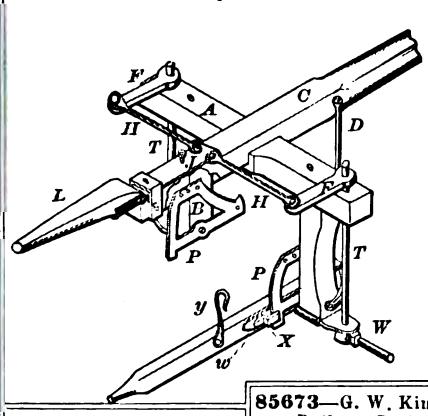

85665—C. D. Hunt—*For Cutting Nails.*

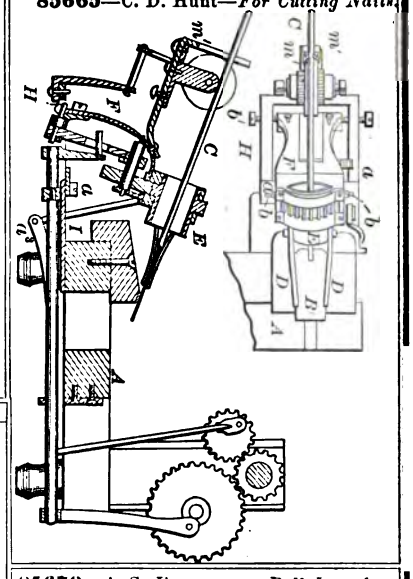

85673—G. W. King—*Railway Rail.*

85669—J. Jennings—*Horse Hay Fork*

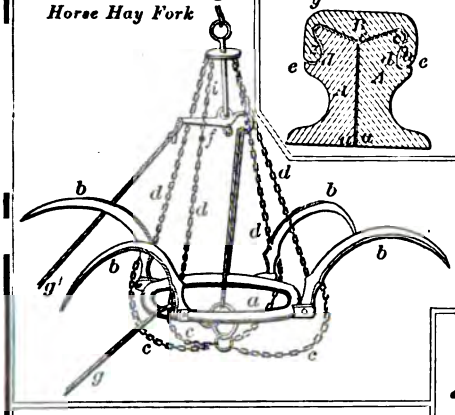

85670—A. S. Jimmerson—*Pull Iron for Horse Cars.*

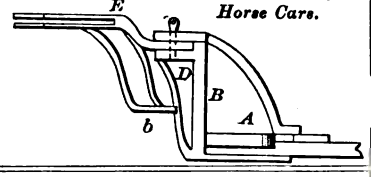

85672—J. Kelsay—*Gun Lock.*

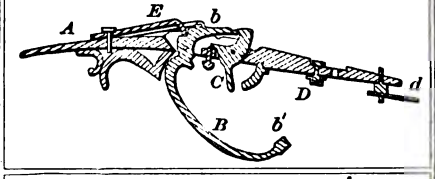

85674—D. L. Koons—*Farm Gate.*

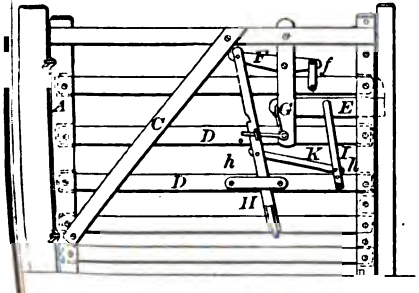

85675—G. W. Kring—*Cultivator.*

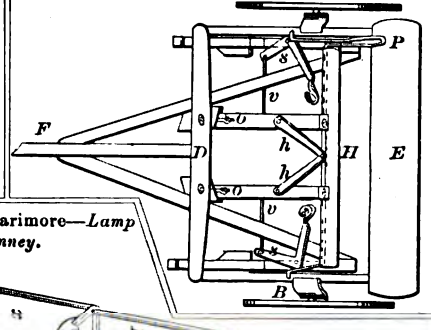

85671—W. Jones—*Gas Burner.*

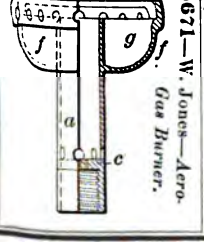

85677—J. W. Larimore—*Lamp Chimney.*

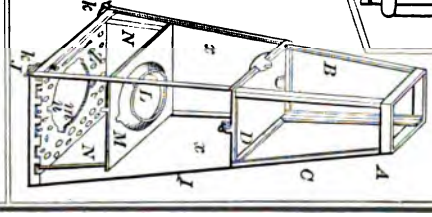

85676—I. I. Lancaster—*Shingle Machine.*

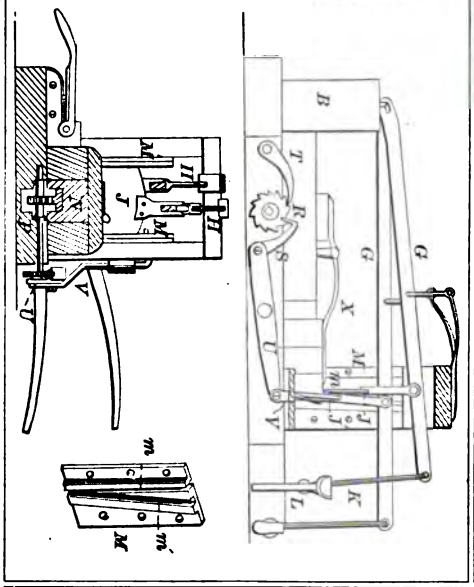

85679—H. T. Lee—*Washing Machine and Boiler.*

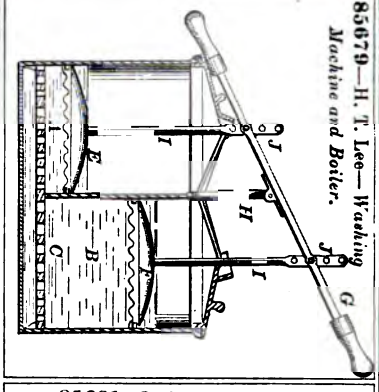

85681—L. O. Makepeace—*Boot.*

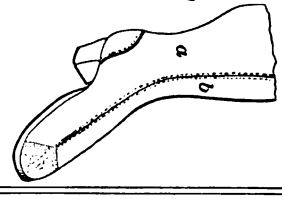

85678—D. S. Leavitt—*Cooking Stove.*

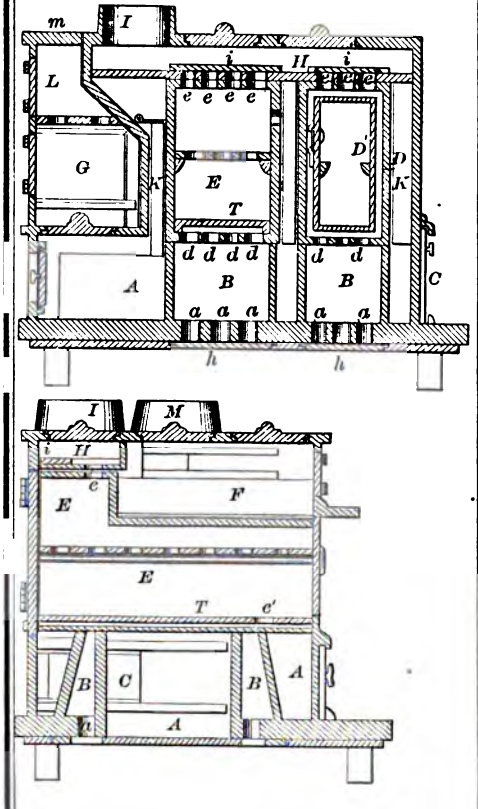

85680—G. R. Lucas—*Shifting Carriage Top.*

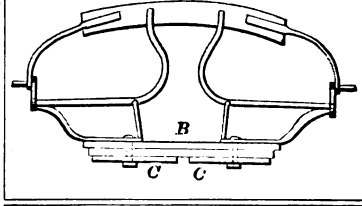

85683—E. W. McGuire—*Water Wheel.*

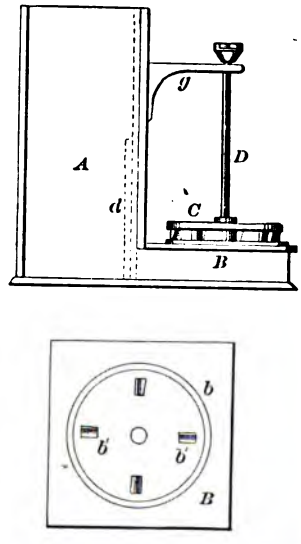

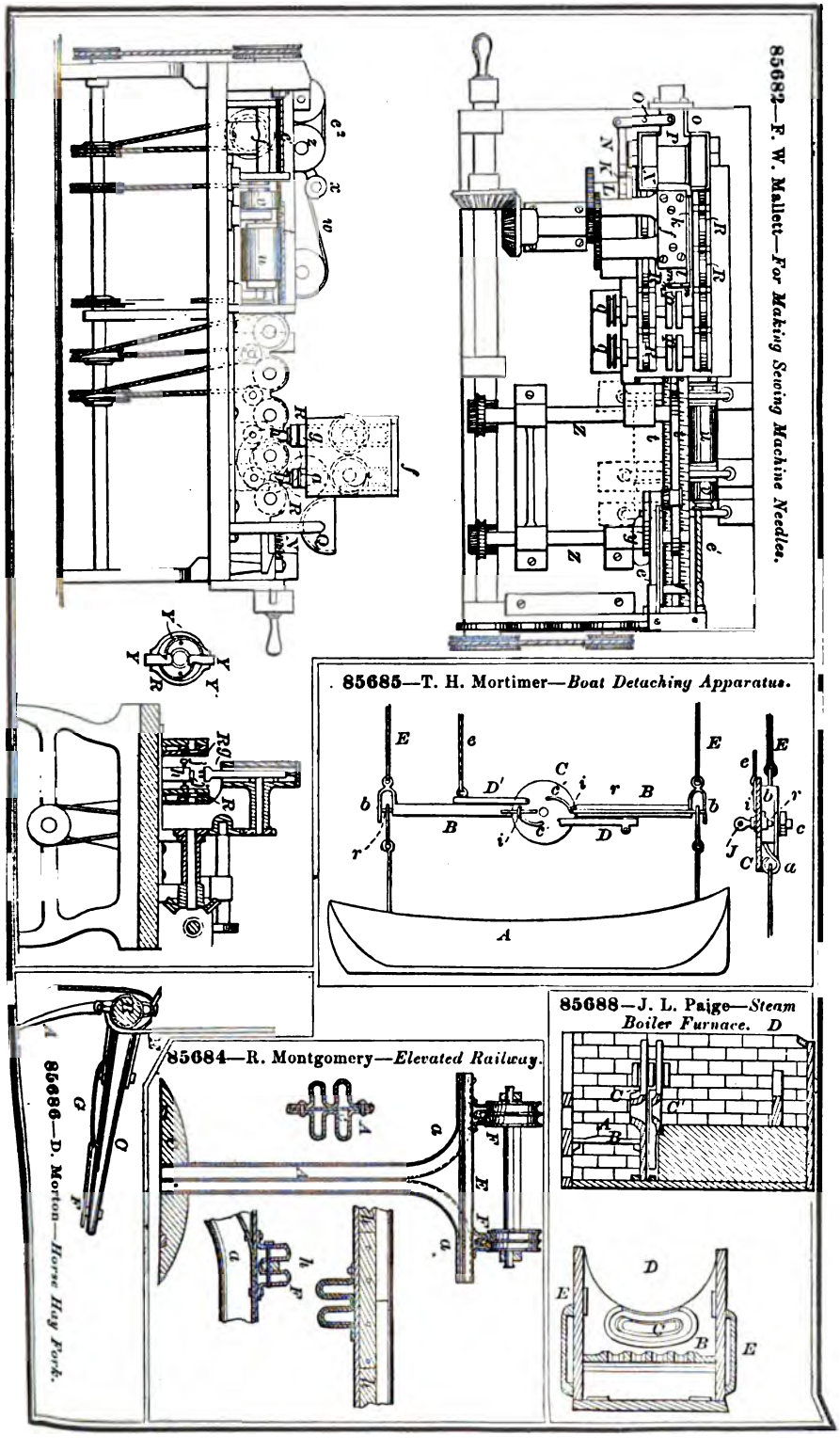

85682—F. W. Mallett—*For Making Sewing Machine Needles.*

85685—T. H. Mortimer—*Boat Detaching Apparatus.*

85686—D. Morton—*Horse Hay Fork.*

85684—R. Montgomery—*Elevated Railway.*

85688—J. L. Paige—*Steam Boiler Furnace.* D

85689—G. A. Parker—*Horse Shoe.*

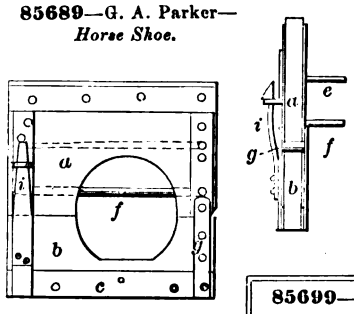

85690—S. Pennock—*Carpet Stretcher.*

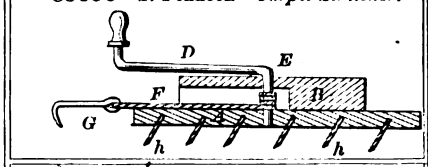

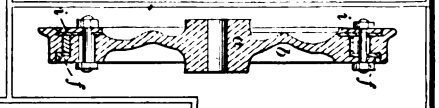

85693—J. Raddin—*Car Wheel for Railways.*

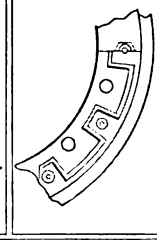

85699—Schuyler & Crownshield—*Pitchfork*

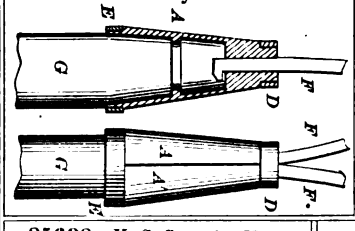

85692—W. E. Prall—*Railroad Ticket.*

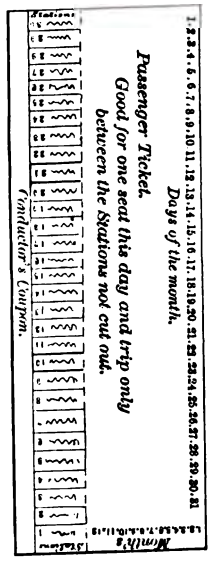

85698—H. S. Saroni—*Vapor Burner.*

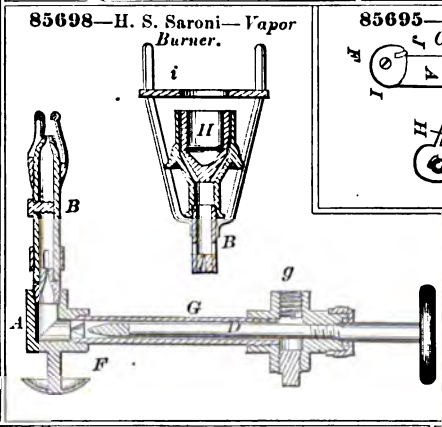

85695—C. J. Roberts—*Curtain Fixture.*

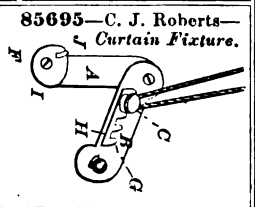

85694—J. Reilly—*Saw Buckle and Frame.*

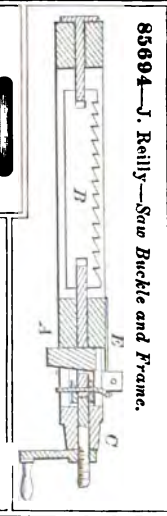

85697—J. F. Sanford—*Lamp Burner.*

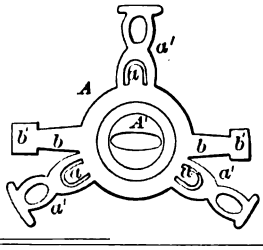

85696—L. Ronat—*Plow.*

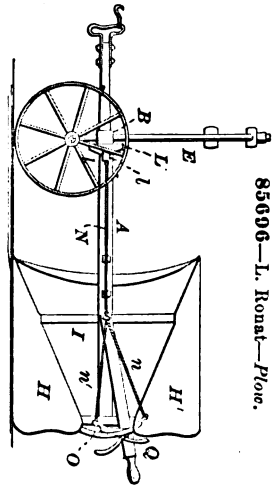

85691—W. A. Plantz—*Snow Plow.*

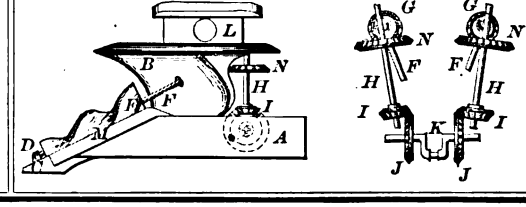

85700—E. L. Seymour—*For Separating and Concentrating Ores.*

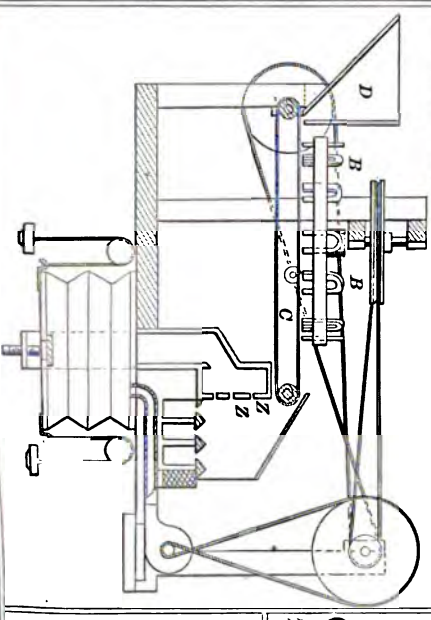

85702—R. S. Sheldon—*Horse Hay Fork.*

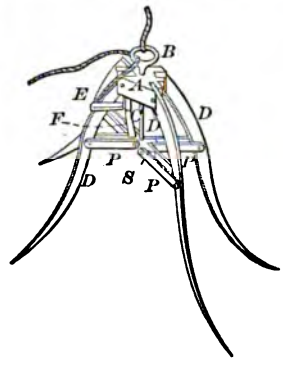

85704—Snow & Coe—*Toy Gun.*

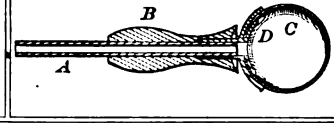

85701—E. L. Seymour—*Furnace for Producing Metals.*

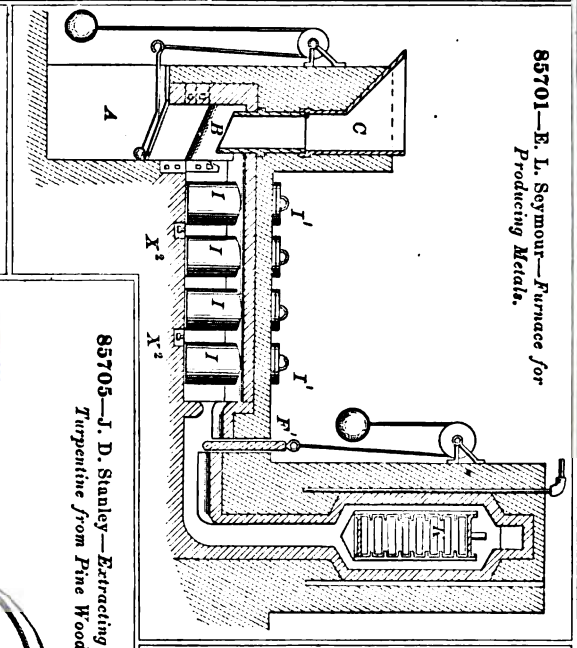

85707—J. H. Titus—*Hooking Glove.*

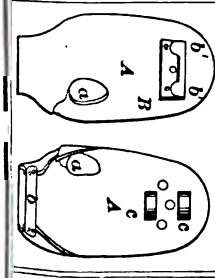

85705—J. D. Stanley—*Extracting Spirits of Turpentine from Pine Wood.*

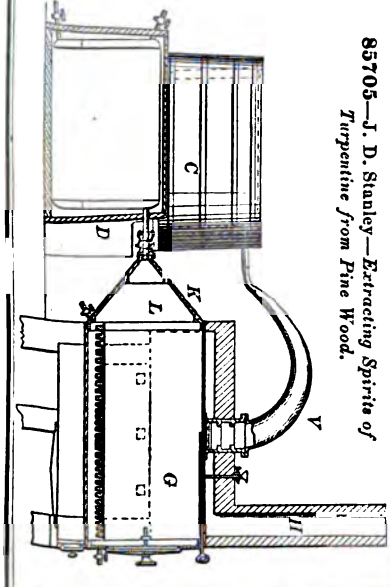

85706—J. H. Tebbl—*Dry Measure.*

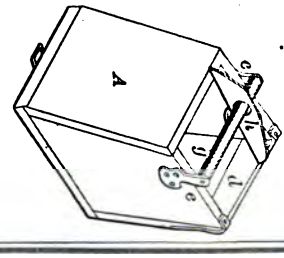

85703—J. J. Simons—*Pile Driver.*

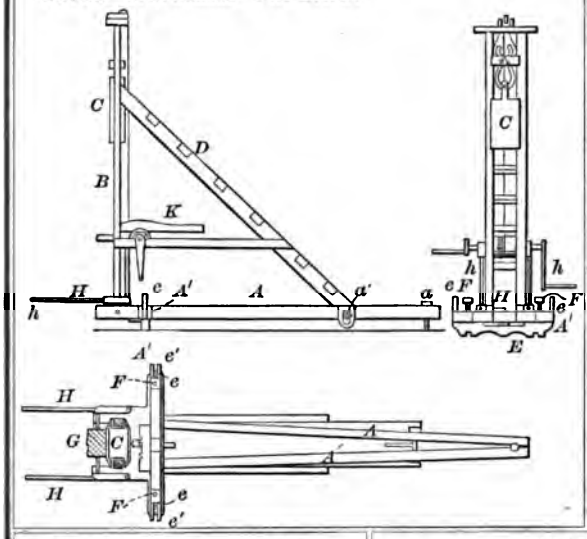

85709—Treftz & Shimpert—*Wheelbarrow and Cultivator.*

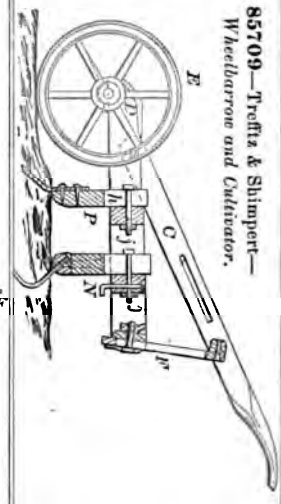

85711—S. B. Ward—*Seed Planter.*

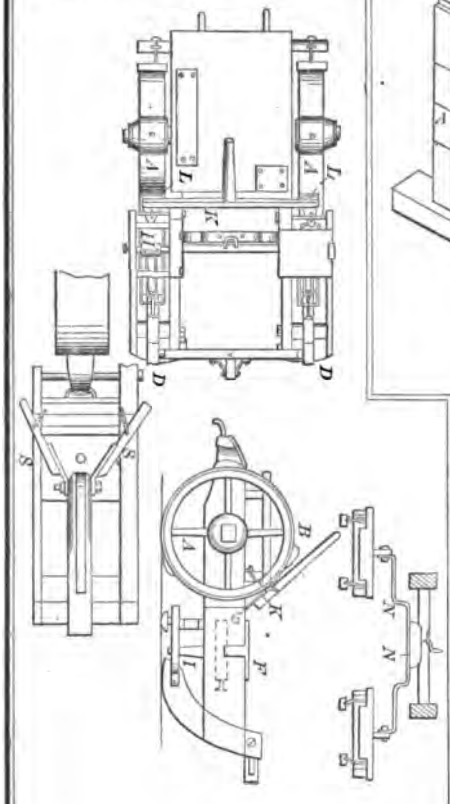

85710—M. I. Turck—*Fence.*

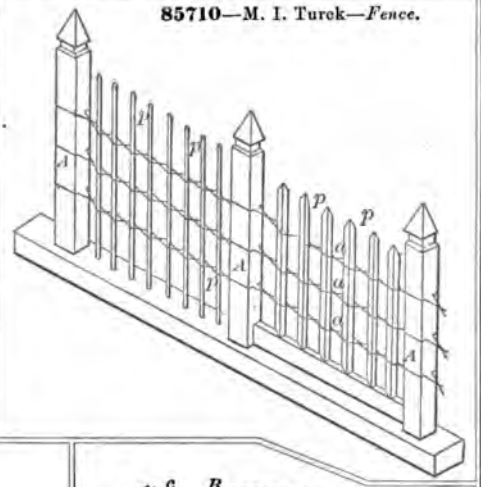

85717—M. Zimmerman—*Faucet.*

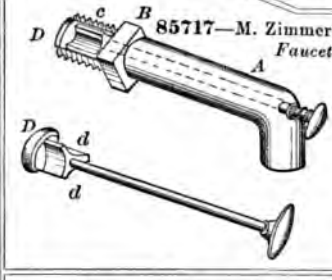

85708—F. A. Traut—*Parallel Ruler.*

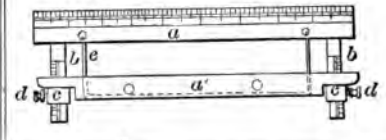

85712—A. Weeks—*Railroad Car Heater.*

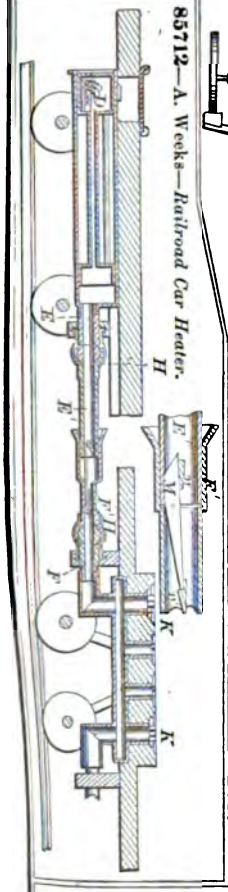

85715—L. Wolf—*Wagon Brake.*

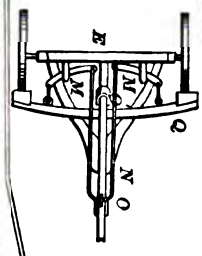

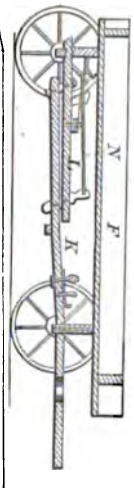

85716—A. T. Wright—*Beehive.*

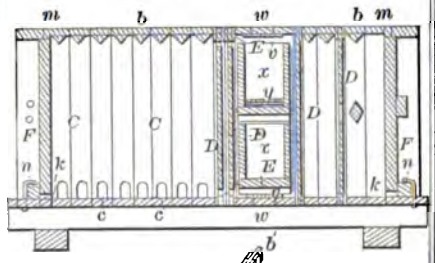

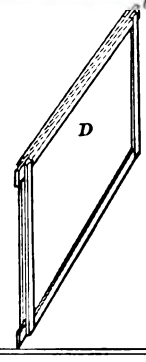

85718—H. Crumlisk—*Steam Motor.*

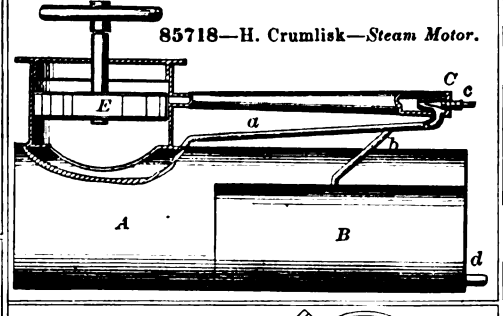

85720—P. H. Watson—*Railway Car.*

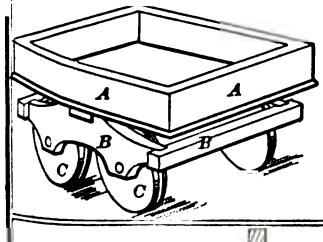

85721—F. J. Ashburn—*Corn Planter.*

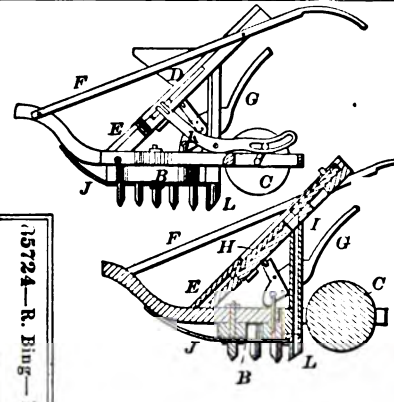

85724—R. Eing—*Water Wheel.*

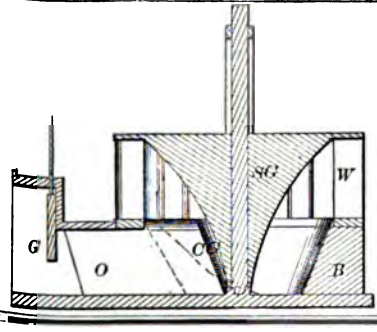

85719—C Tellier—*Manufacture of Ice.*

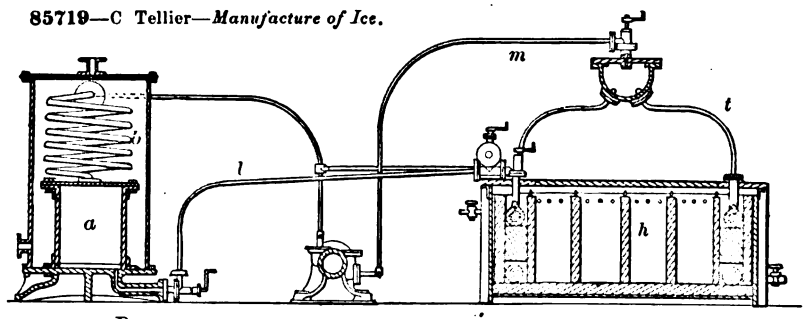

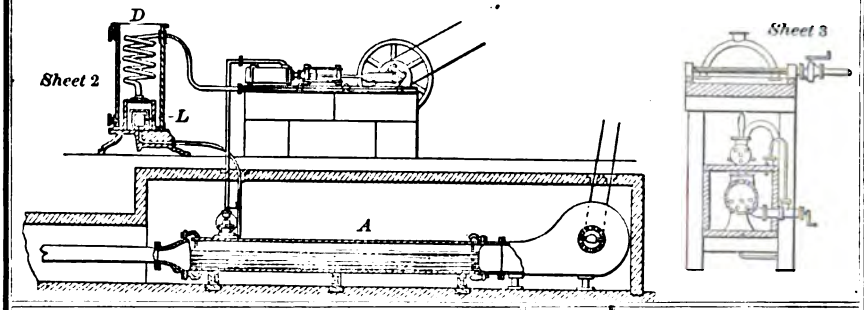

85722—J. Barnes—*Harvester.*

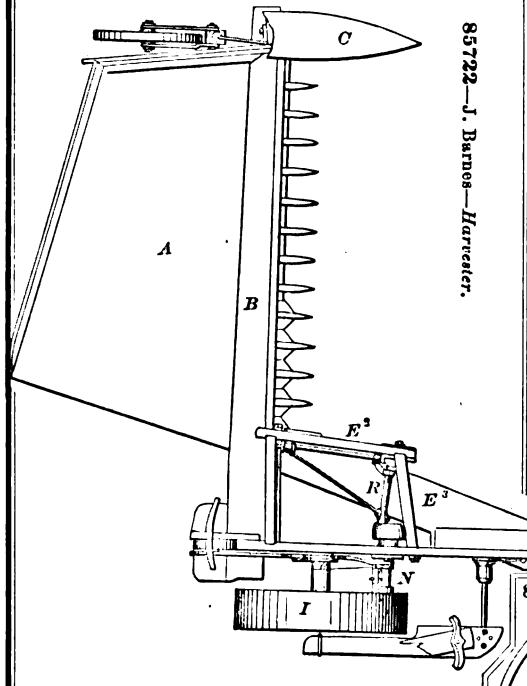

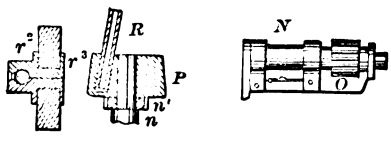

85723—J. Barnes—*Harvester Rake.*

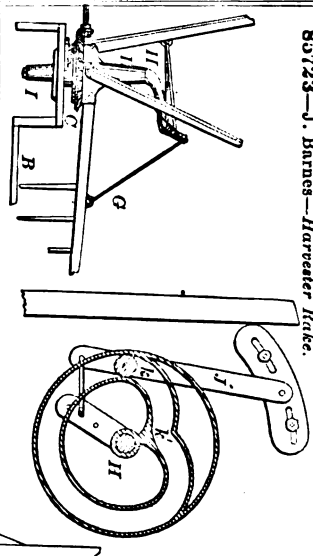

85727—S. E. Cleveland—*Toy Hoop.*

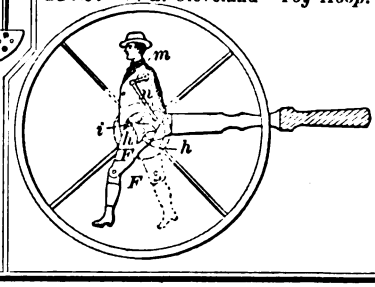

85725—B. S. Burgan—*Flax Boll Brake.*

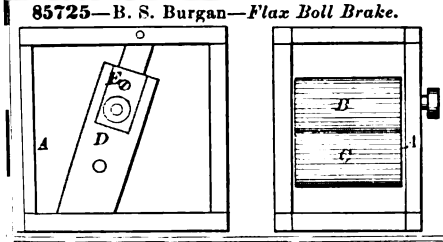

85731—W. Culveyhouse—*Tinners' Bench.*

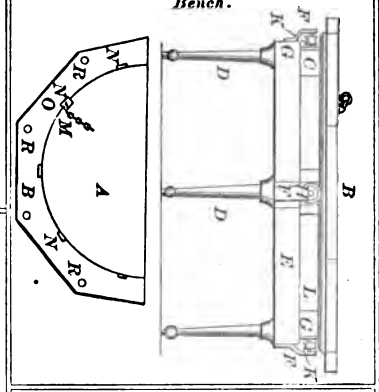

85729—D. Conlon—*Door and Window Tightener and Fastener.*

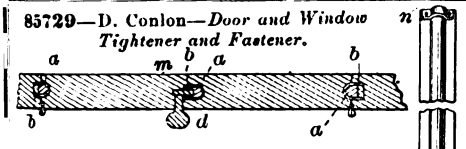

85730—F. Crocker—*Torpedo for Oil Wells.*

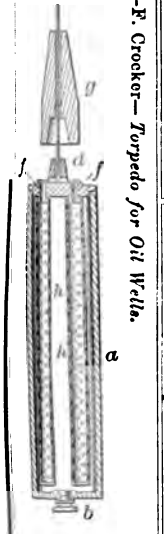

85734—W. E. Derrick—*Grapple for Suspending Horse Hay Forks.*

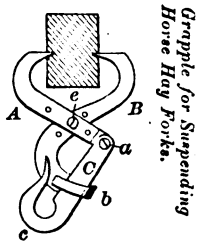

85733—W. E. Derrick—*Horse Hay Fork.*

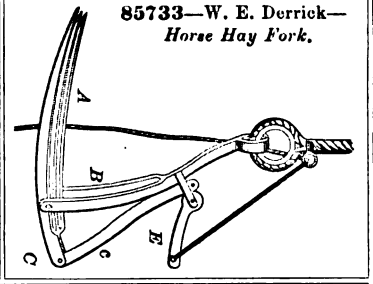

85728—C. Cole—*Hinge.*

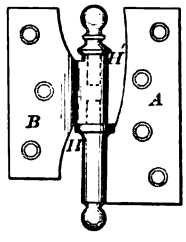

85726—R. G. Chase—*Mill for Grinding Sumac.*

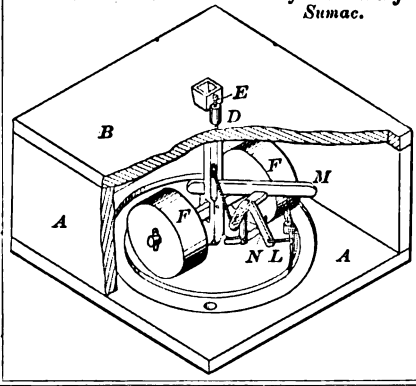

85732—B. I. Day—*For Turning Street Cars.*

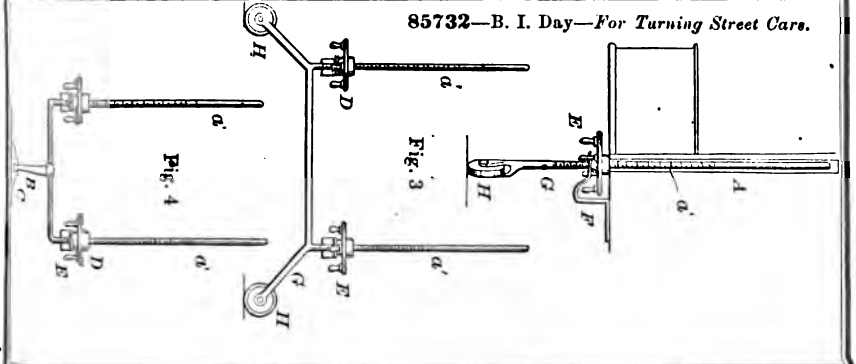

85735—H. Fleming—*Stone and Stump Raising Machine.*

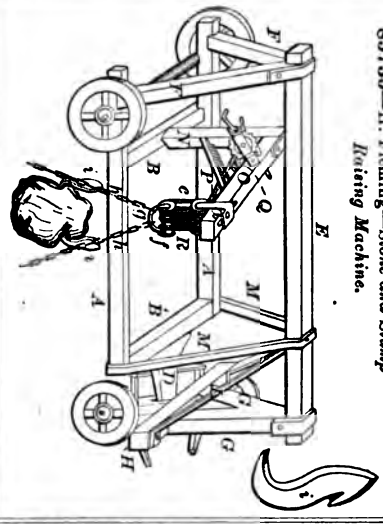

85736—T. B. Gilbert—*Cultivator.*

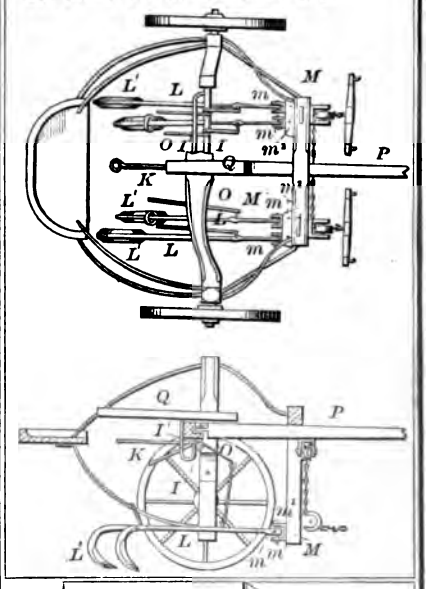

85737—J. T. Gilmore—*For Trimming and Dressing Millstones.*

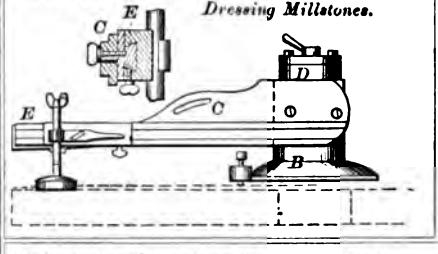

85739—L. Haverstick—*Horse Hay Fork.*

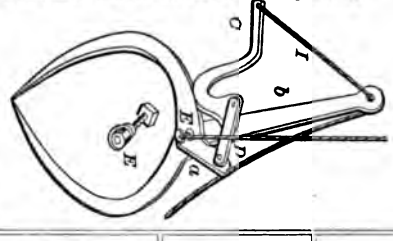

85742—J. Le Comte—*Uniting Sheet Metal Plates.*

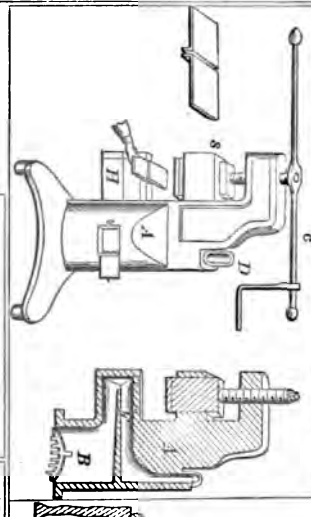

85740—O. A. & W. P. Horn—*Gauge for Circular Saws.*

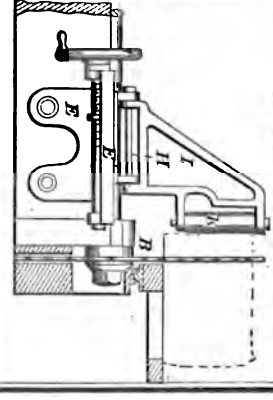

85738—W. D. Gridley—*Pieture Hook.*

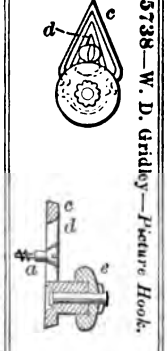

85744—T. Lewis—*Vaginal Injection Pipe for Syringes.*

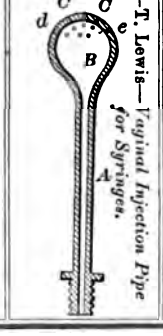

85741—W. T. Huntington—*Earth Boring Instrument.*

85745—G. G. Lobdell—*Car Wheel.*

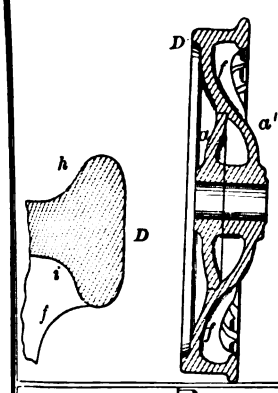

85746—D. A. Manuel—*Plow.*

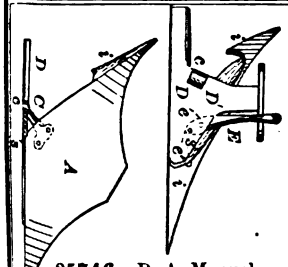

85747—C. K. Marshall—*Horse Collar.*

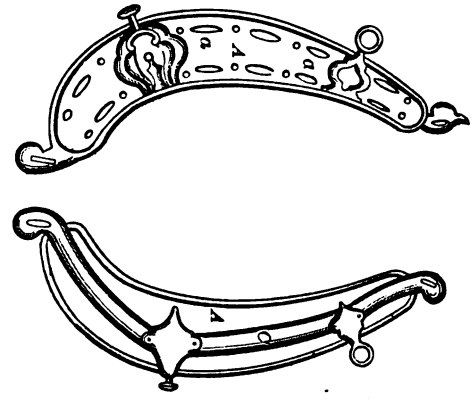

85748—G. W. Martin—*Boot and Shoe Heel.*

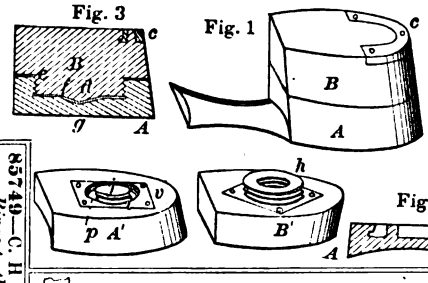

85749—C. H. Mellor—*Securing Rubber Rings to the Doors of Vats, &c.*

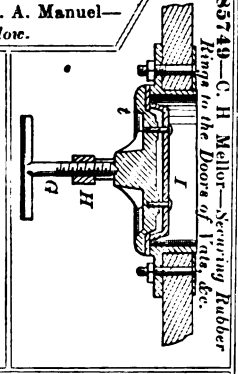

85750—J. Minor—*Railroad Car Stove.*

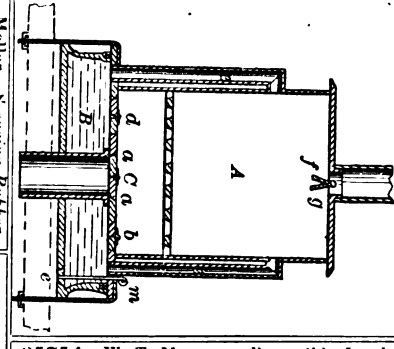

85751—J. A. Morrison—*Curtain Fixture.*

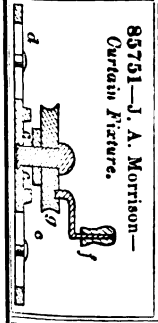

85753—W. T. Munger—*Reversible Latch.*

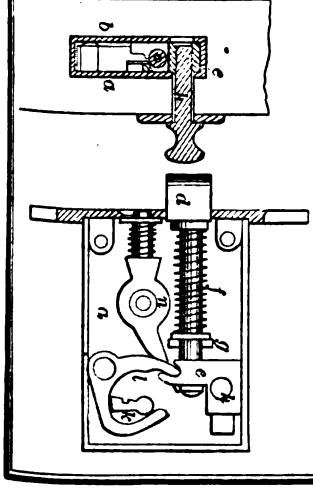

85754—W. T. Munger—*Reversible Latch.*

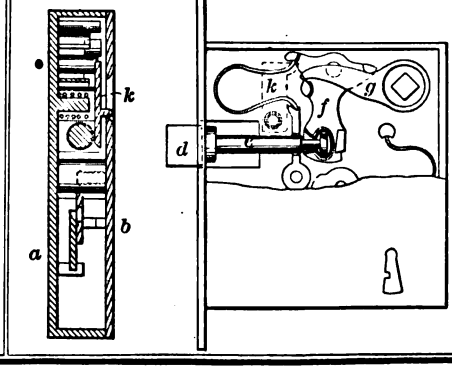

85755—M. Neudgent—*Gate.*

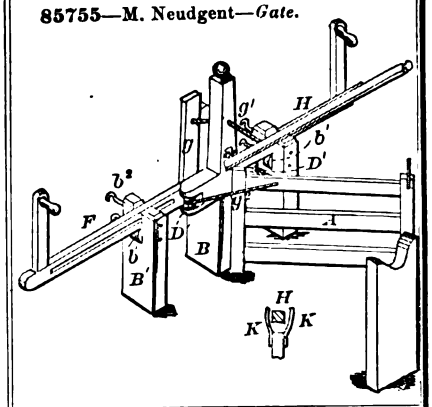

85757—S. R. Nye—*Horse Rake.*

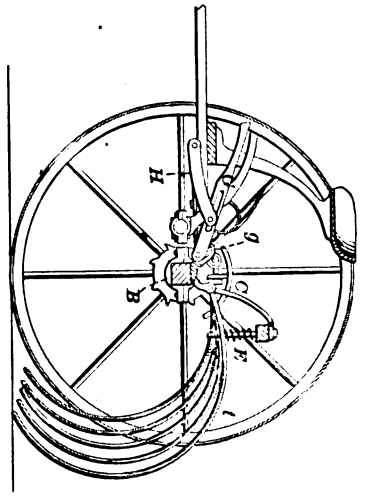

85752—P. A. Mowers—*Mortising Machine.*

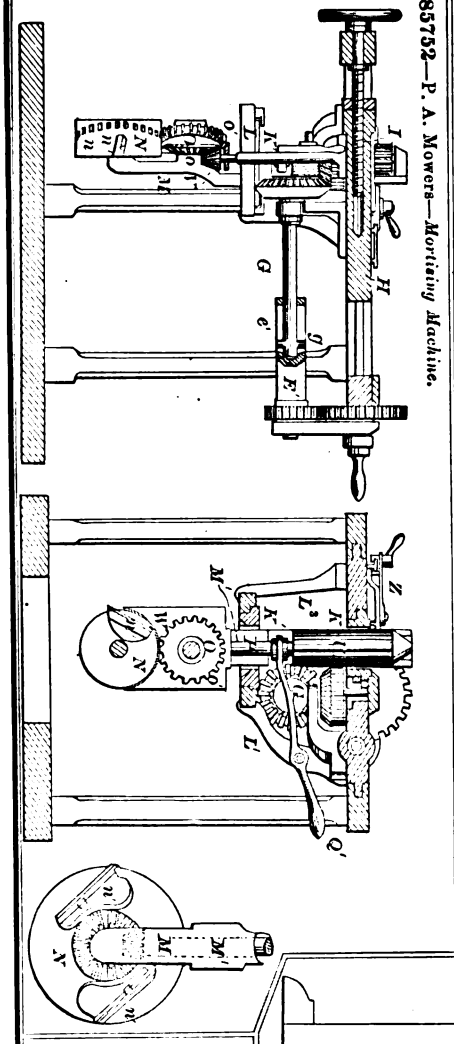

85758—S. Parker—*Railway Frog.*

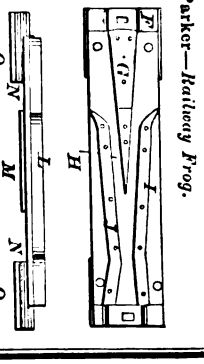

85759—C. Penfield—*Door Bell.*

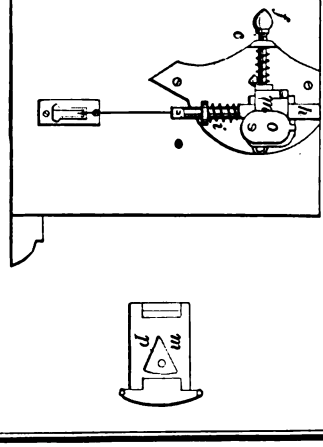

85756—O. A. North—*Clothes Hook.*

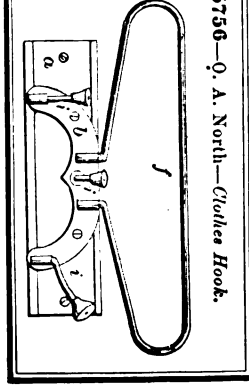

85760—C. Penfield—*Alarm Bell.*

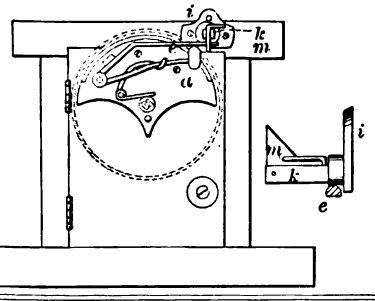

85767—A. G. Ritz—*Car Coupling.*

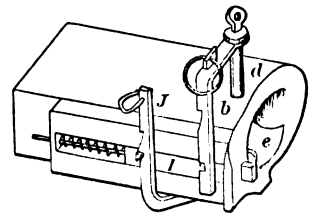

85762—R. Poole—*For Mixing Paints and Chemicals.*

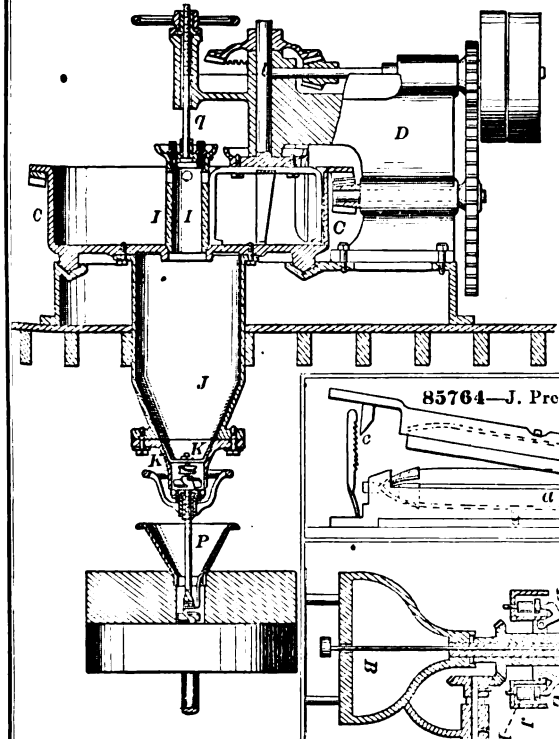

85768—J. Root—*Plow.*

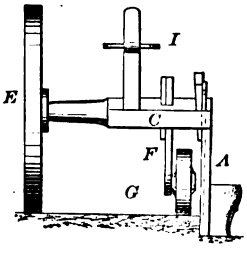

85764—J. Prentice—*Cigar Makers' Mould.*

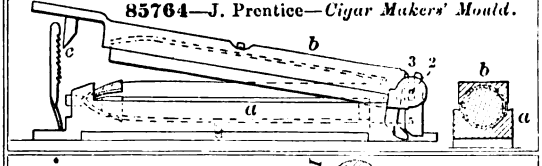

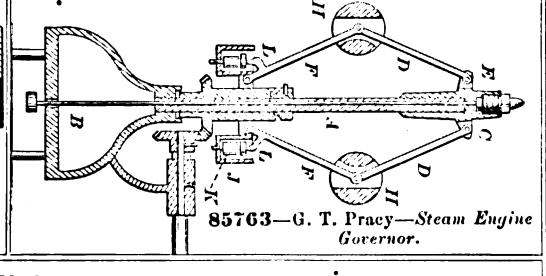

85763—G. T. Pracy—*Steam Engine Governor.*

85765—J. D. Reiff—*Knitting Machine.*

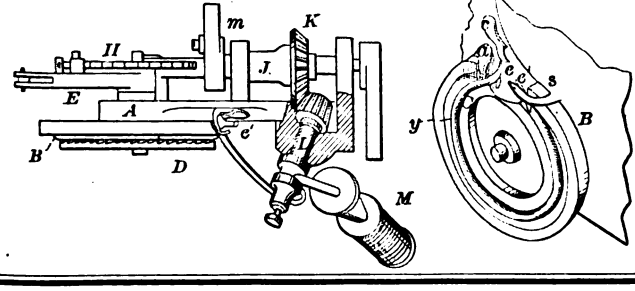

85769—J. U. Slingluff—*Threshing Machine.*

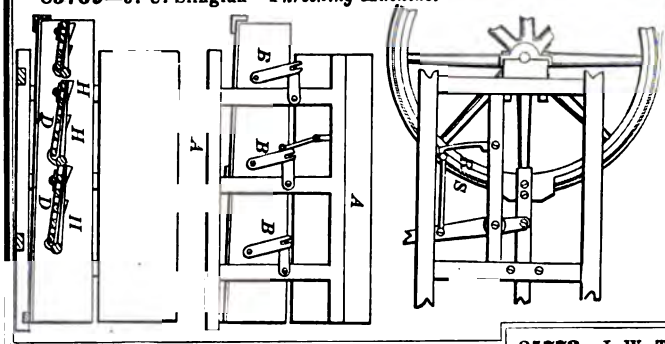

85770—J. Sperrey—*Swage for Saw Teeth.*

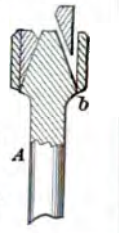

85771—J. E. Stuber—*Shaft Tug.*

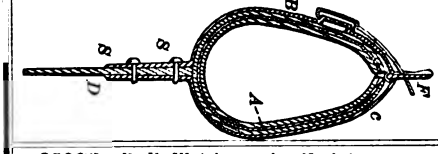

85772—J. W. Tripp—*Shutter Hinge and Knob.*

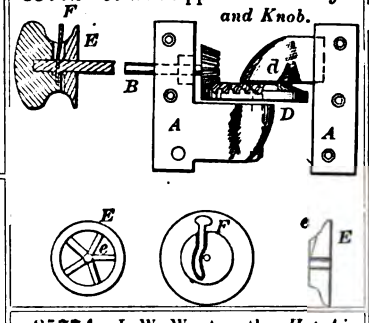

85773—B. F. Weishampel—*Neckties.*

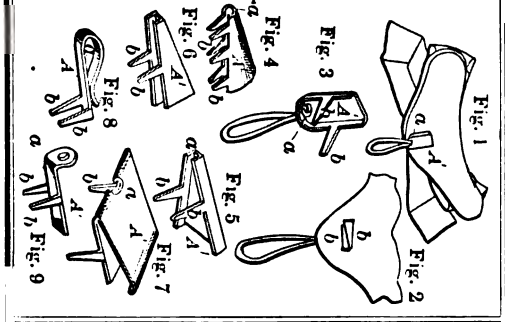

85774—J. W. Wentworth—*Hot Air Furnace.*

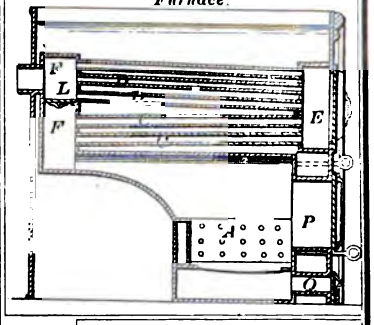

85778—G. M. Atherton—*Water Elevator.*

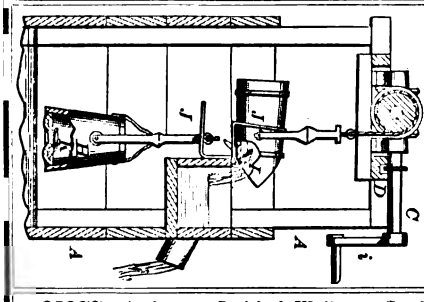

85775—J. Winkle—*For Making Crucibles.*

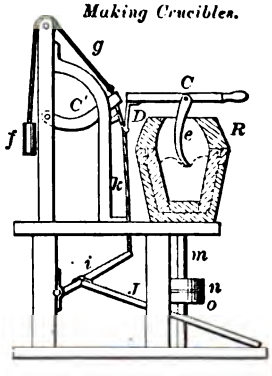

85777—Anderson, Smith & Wallace—*Scaffold.*

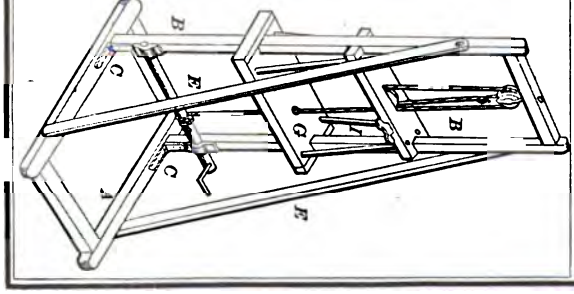

85776—H. Ahrend—*Door Lock.*

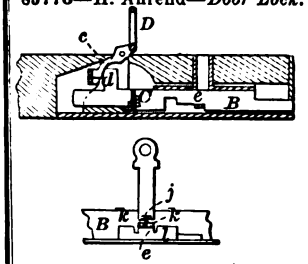

85780—S. Ayres—*Animal Trap.*

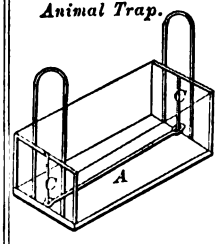

85781—B. T. Babbitt—*For the Formation of Ice.*

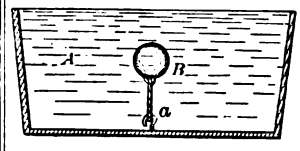

85779—J. Atkins—*Steam Engine Governor.*

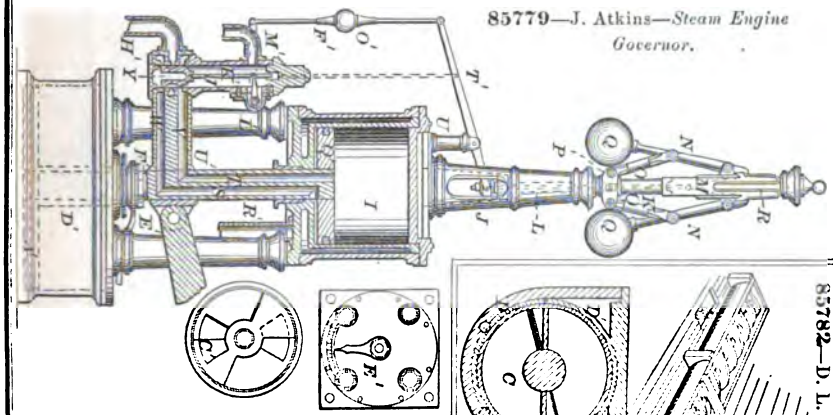

85782—D. L. Bartlett—*Grain Conveyor.*

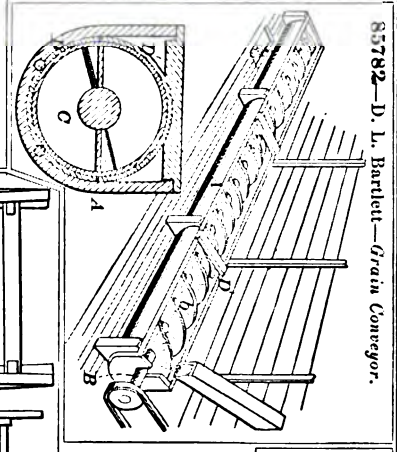

85785—Bolton & Hoyt—*Sled Brake.*

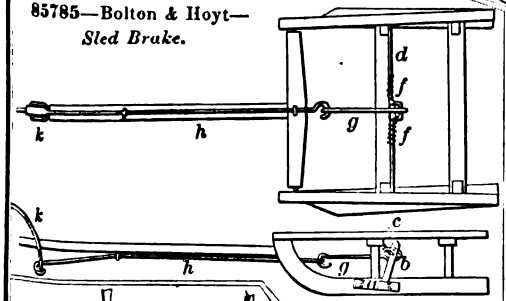

85783—J. Berkeley—*Baling Press.*

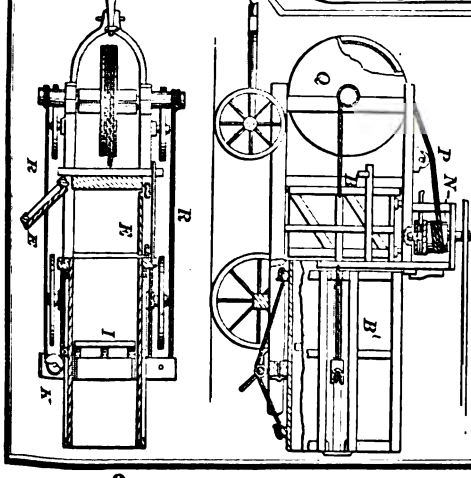

85786—Brocklebank & Trainer—*Wooden Pavement.*

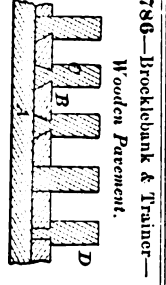

85784—S. D. Bingham—*Harness Cock Eye.*

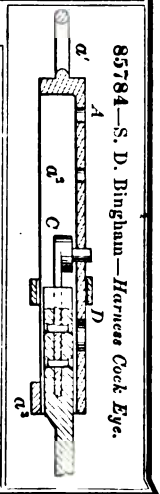

85787—J. Bruno, Jr.—*Universal Globe Joint.*

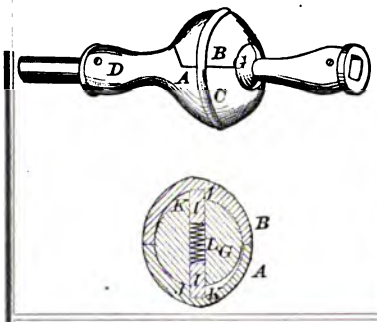

85793—J. C. Creed—*Railroad Car Axle Box.*

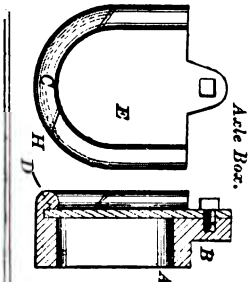

85791—E. Chitister—*Evaporating Apparatus.*

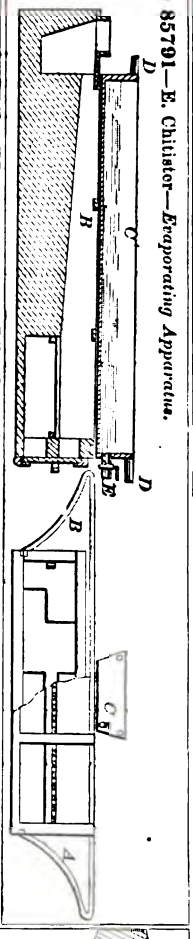

85788—T. C. Bush—*Toy Blow Gun.*

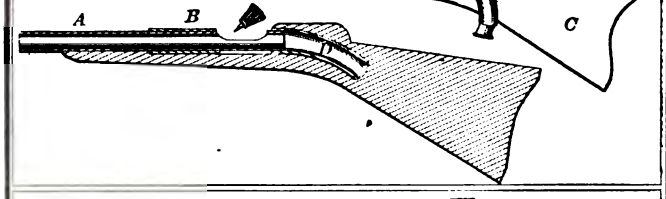

85792—G. H. Clemens—*Steam Safety Valve.*

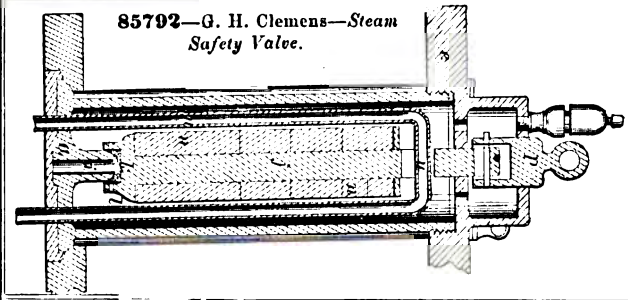

85794—C H. Crosby—*Bolt Fastening for Rail Ties.*

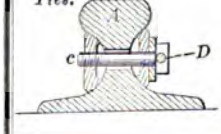

85795—Courtney & Kelagher—*Smoking Pipe.*

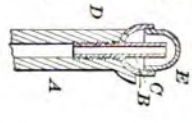

85789—S. D. Carpenter—*Propelling Apparatus.*

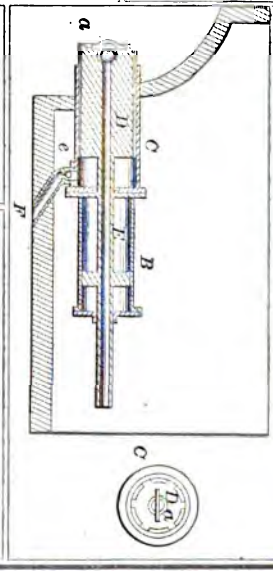

85799—E. Day—*Door Knob.*

85798—E. S. Dawson—*Harness Buckle.*

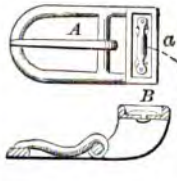

85800—D. Decker—*Veneer Press.*

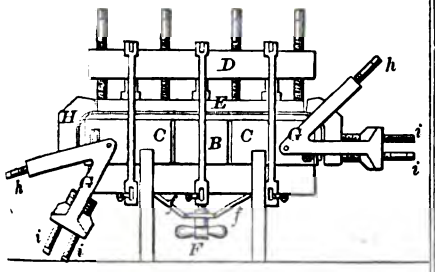

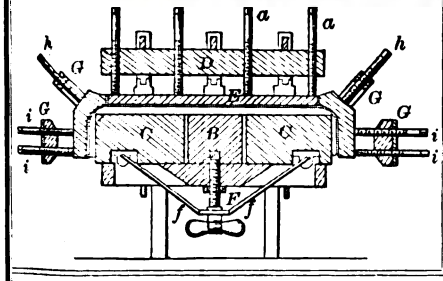

85802—H. A. Duc, Jr.—*Centrifugal Pump.*

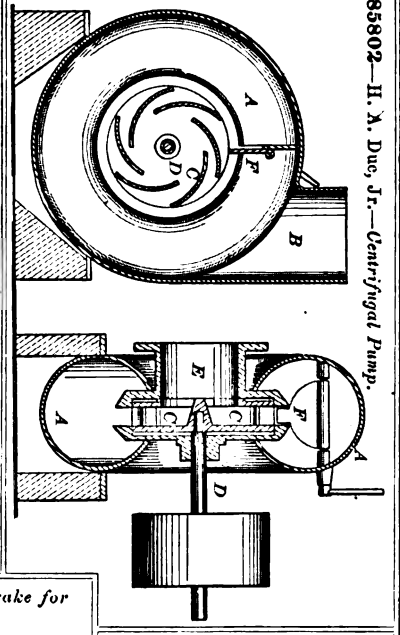

85803—C. Ducreux—*Safety Attachment and Brake for Carriages.*

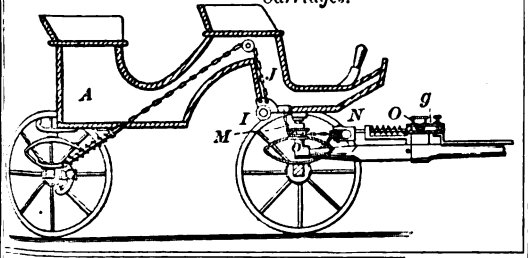

85804—L. A. & W. G. Duval—*Gas Heater.*

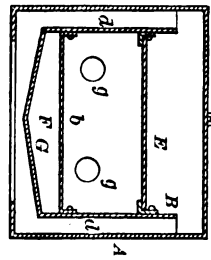

85801—Denton, Shannon & Lucas—*Grain Separator.*

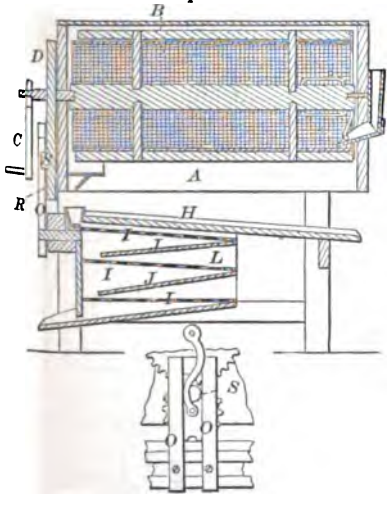

85805—L. Eiffler—*Padlock.*

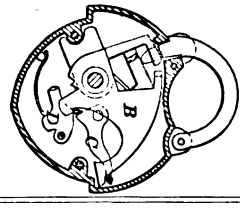

85807—J. Erpelding—*Lunch Box.*

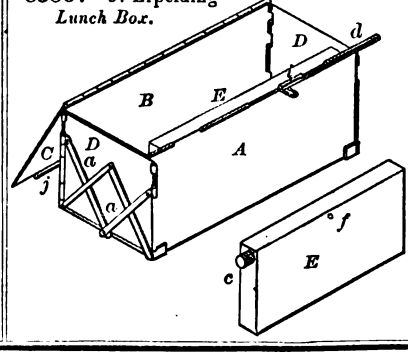

85808—E. Evans—*Hay and Cotton Press.*

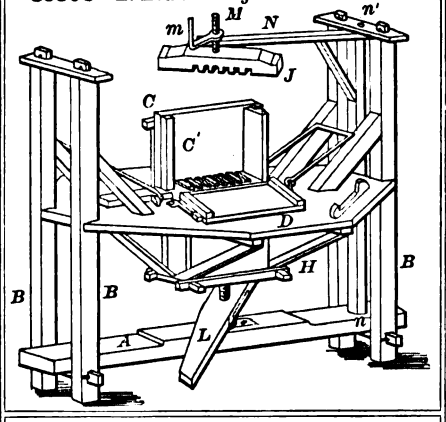

85809—C. H. Finn—*Oven Door.*

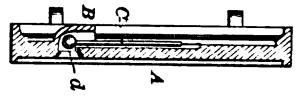

85810—S. Gibbons—*Still for Refining and Distilling Oils.*

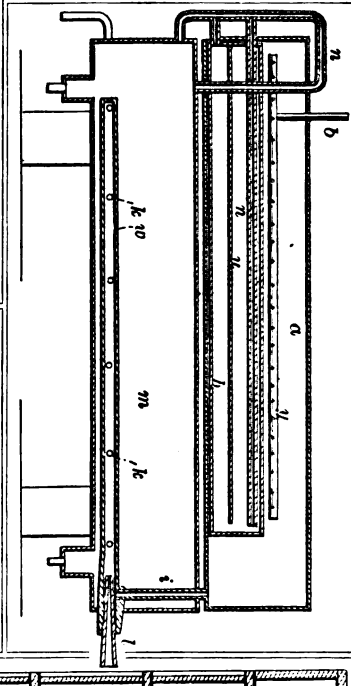

85811—E. Gill—*Bureau.*

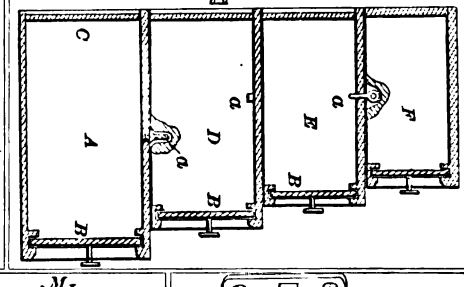

85812—J. G. B. Gill—*Cultivator.*

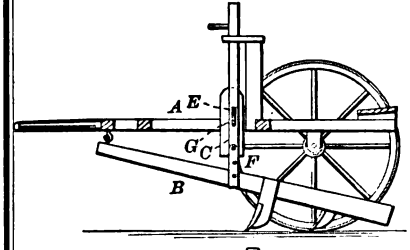

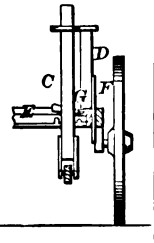

85813—J. Harding—*Window Blind.*

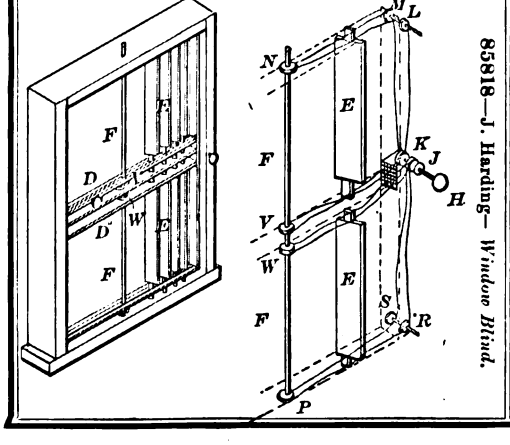

85815—C. W. Hafermalz—*Mirror Frame.*

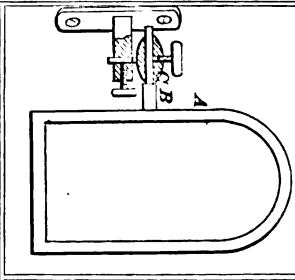

85814—C. Guidet—*Pavement.*

85813—J. Green—*Burning Kiln.*

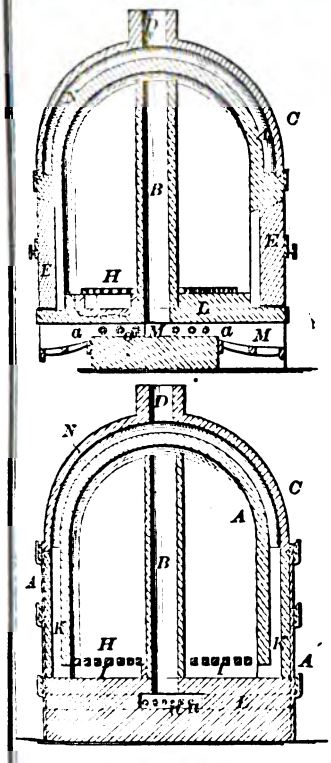

85817—T. Hansbrow—*Steam Engine Cut-off.*

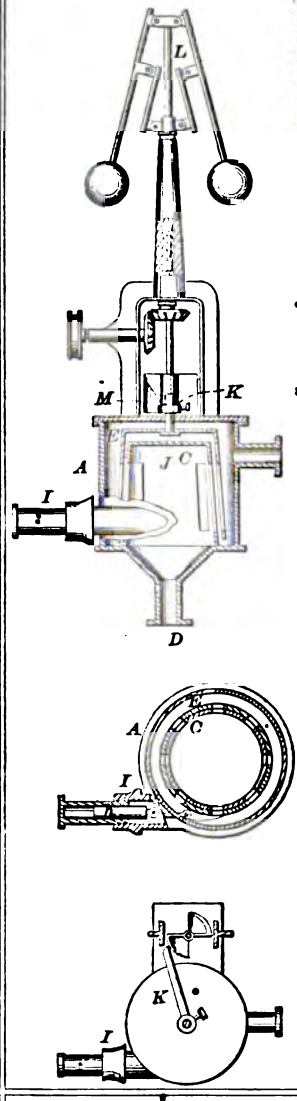

85820—S. C. Hawkins—*Trace Fastening.*

85821—L. Hermance—*Washing Machine.*

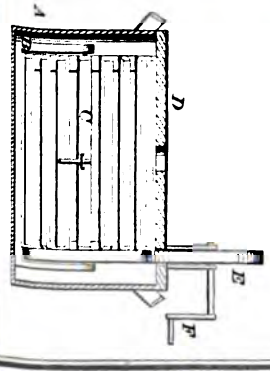

85816—S. S. Hamilton—*Weighing Scale.*

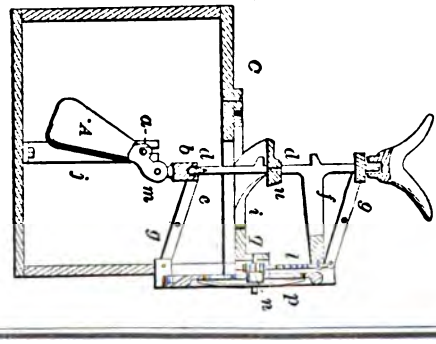

85819—J. L. Haven—*Grindstone Journal Box.*

Fig 1

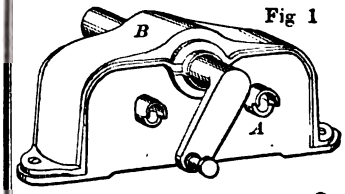

Fig. 3

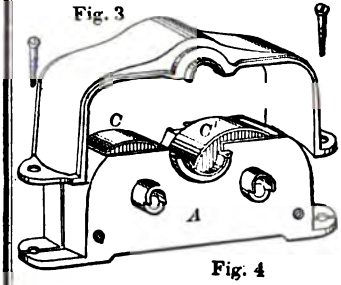

Fig. 2

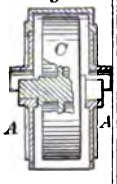

Fig. 4

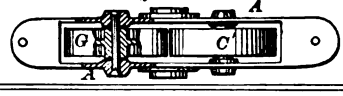

85822—D. H. Hill—*Baling Press.*

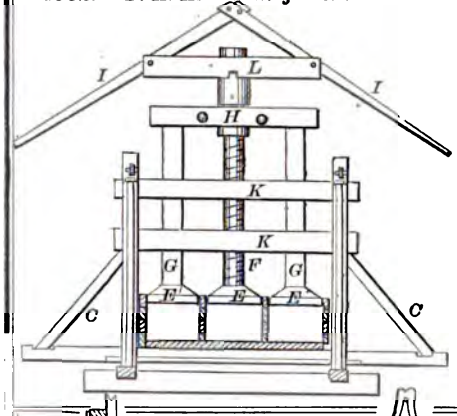

85824—P. F. Hodges—*Grain Drill.*

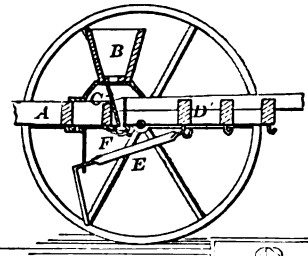

85827—V. R. Holmes—*Kettle Cover.*

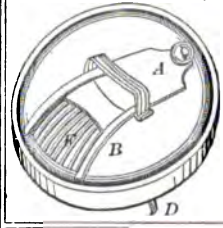

85830—Julian & Kidnocker—*Chain Belt.*

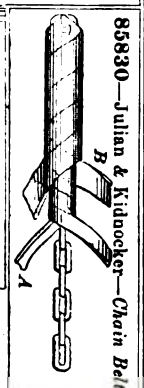

85823—A. C. Hobbs—*Wad Greasing Apparatus.*

85829—J. H. James, Jr.—*For Transferring Freight.*

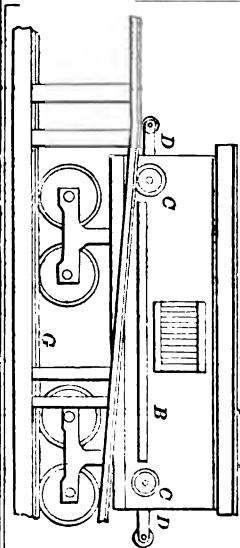

85826—J. W. Hollaman—*Corn Planter and Cultivator.*

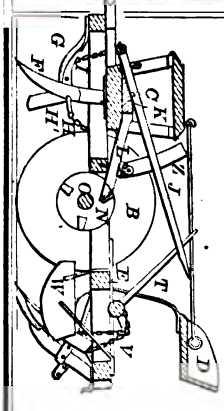

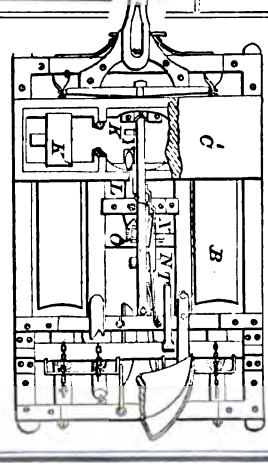

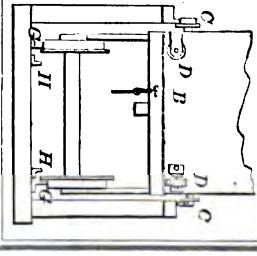

85834—T. Leach—*Goblet.*

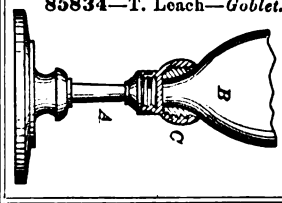

85835—A. Madson—*Chair and Step Ladder.*

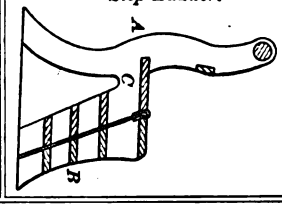

85828—Hospers & Sellers—*Corn Harvester.*

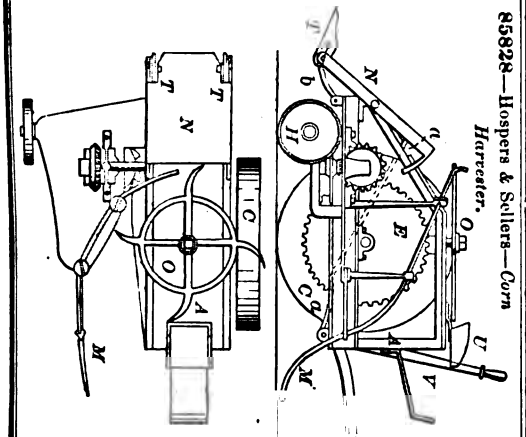

85832—D. J. Keller—*Cattle Pump.*

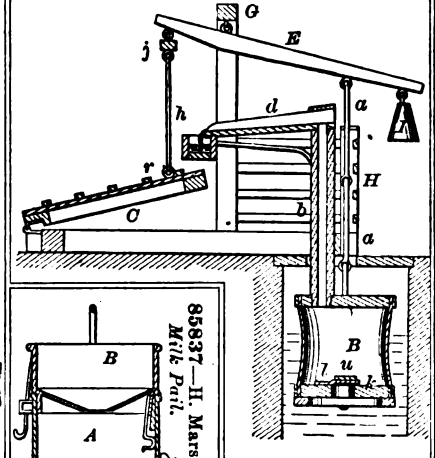

85831—G. E. Johnston—*Hay Derrick.*

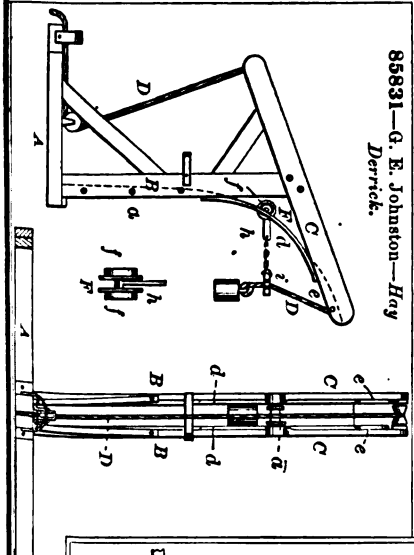

85837—H. Marshall—*Milk Pail.*

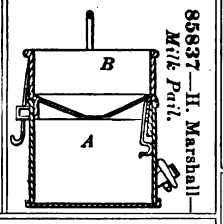

85836—G. S. Manning—*Extension Table.*

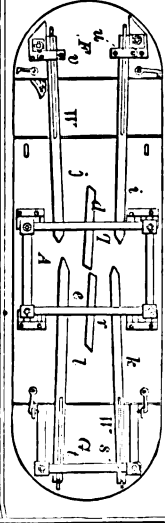

85833—S. Kinman—*Potato Digger.*

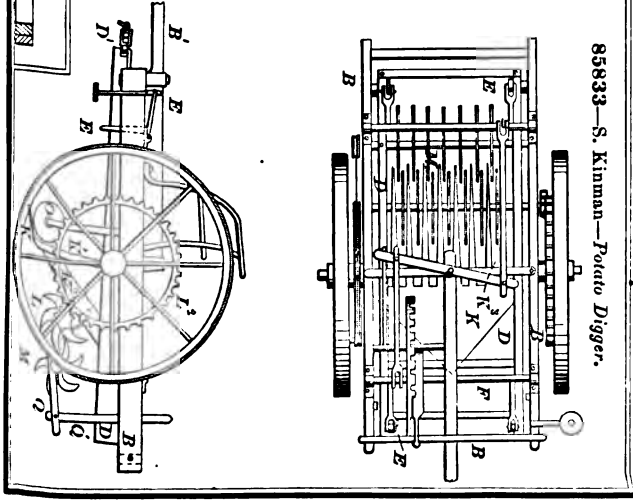

85838—W. Mason—*Gang Plow.*

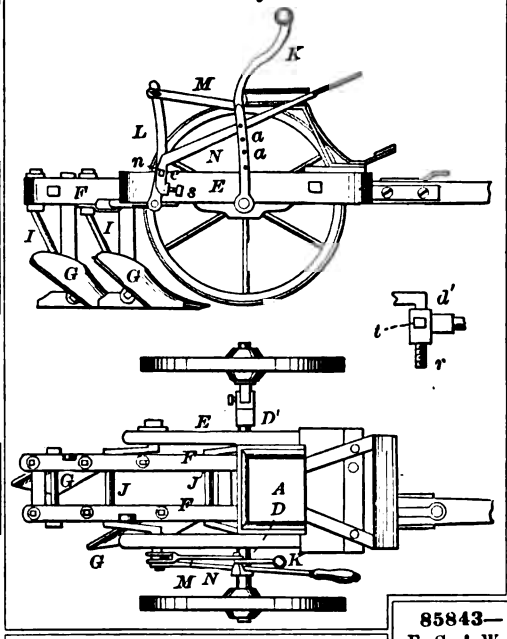

85839—J. A. Martin—*Gate Latch.*

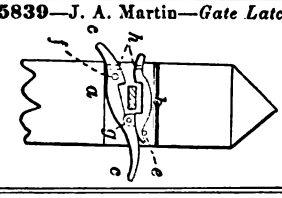

85844—O'Neil & Thomas—*Hay Fork Grapple.*

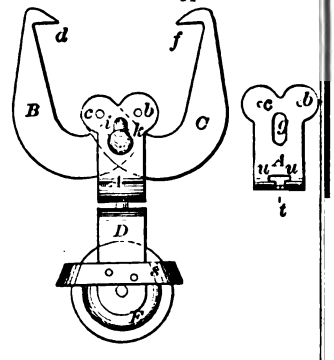

85842—B. Moser—*Curtain Fixture.*

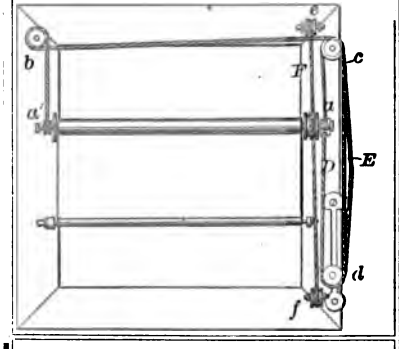

85843—
F. G. & W. F. Niedringhaus—
Curved Elbow.

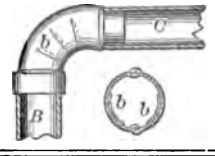

85845—P. O'Thayne—
Curtain Fixture.

85840—S. S. Mattis—*Horse Hay Fork.*

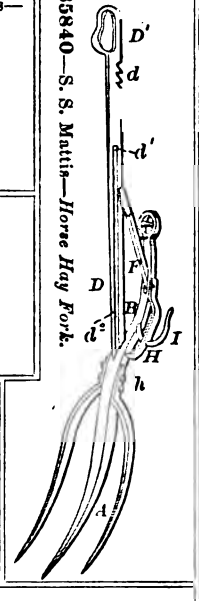

85841—N. S. McLay—*Land Roller.*

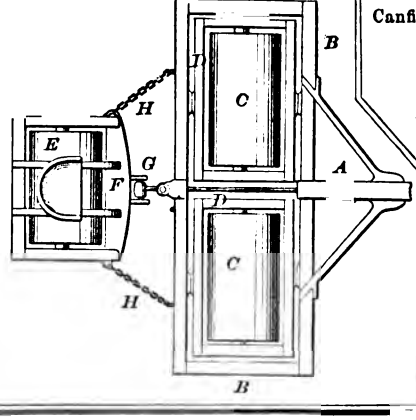

85846—O'Thayne &
Canfield—*Curtain Fixture.*

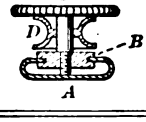

85848—Pierson & Manville—*Burglar Alarm.*

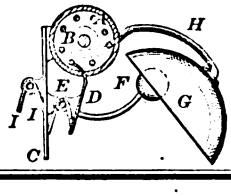

85847—R. B. & J. R. Parks—*Stalk Cutter.*

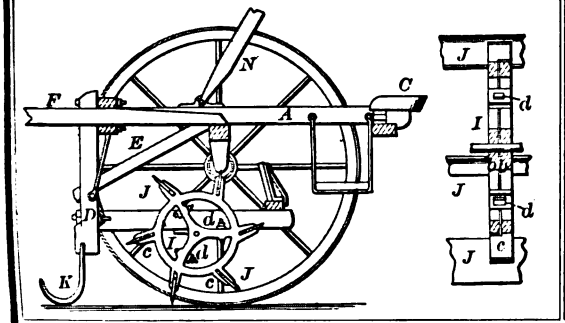

85850—T. J. W. Porter—*Bench Pin.*

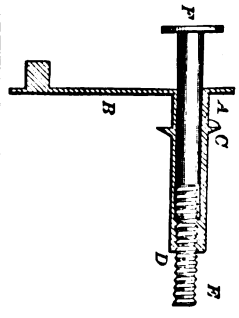

85849—J. I. Pittman—*Cartridge Box.*

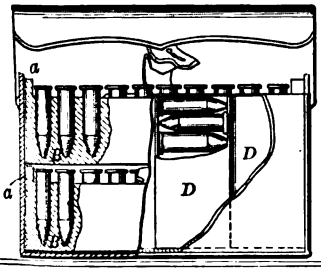

85852—J. J. Reicherts—*Fence.*

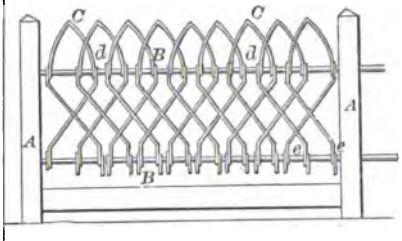

85851—Prentiss & Flint—*Plow.*

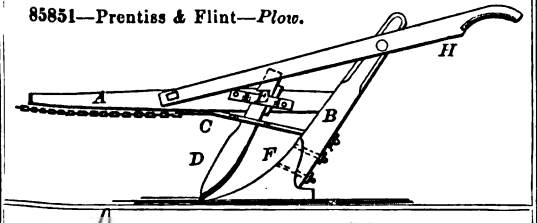

85853—L. Righter—*Carriage Top.*

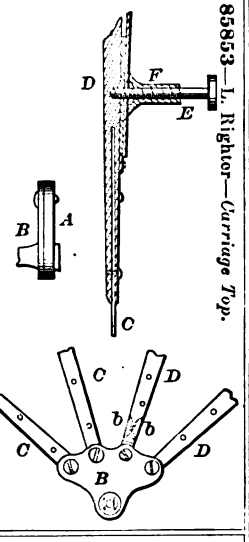

85854—Robb & Allison—*Seed Planter.*

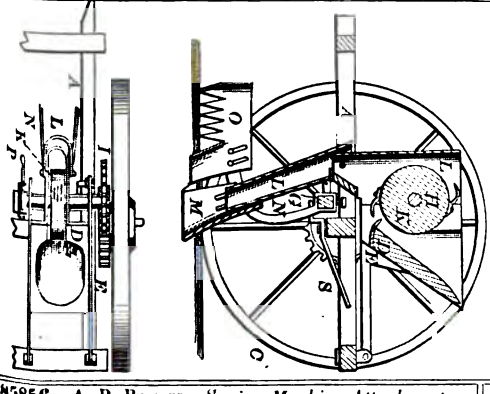

85856—A. P. Rogers—*Sewing Machine Attachment.*

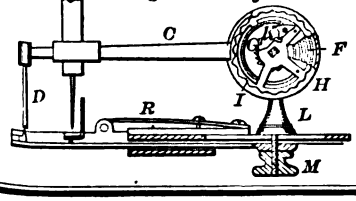

85857—M. Romans—*Wringer.*

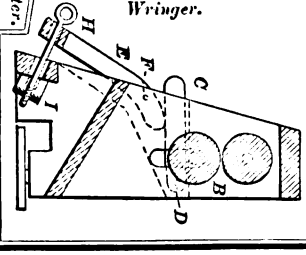

85858—G. T. Savary—*Hay Spreader.*

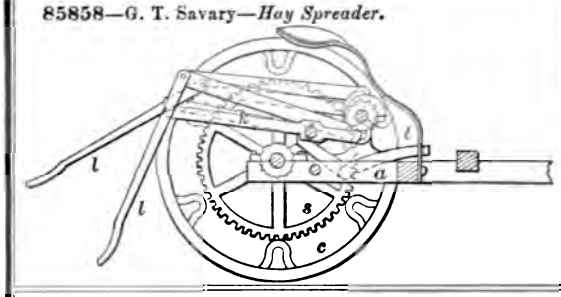

85859—J. F. Sayer—*Stave Jointer.*

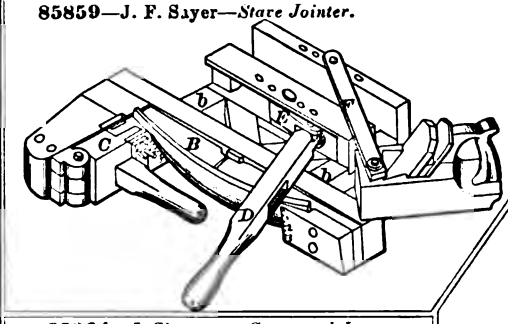

85861—J. Schrey—*Pruning Instrument.*

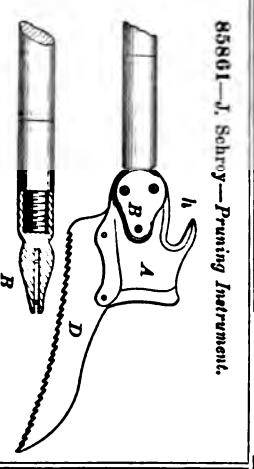

85862—C. Schwanger—*Cultivator.*

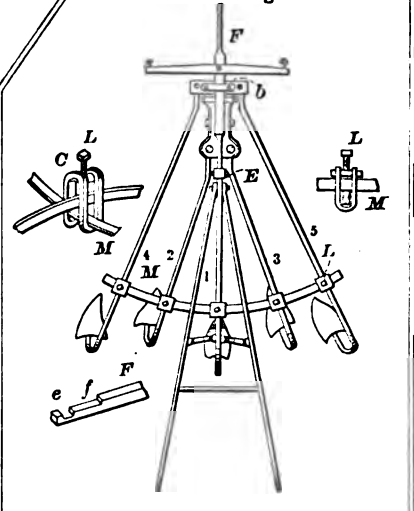

85864—J. Simpson—*Compound Lever.*

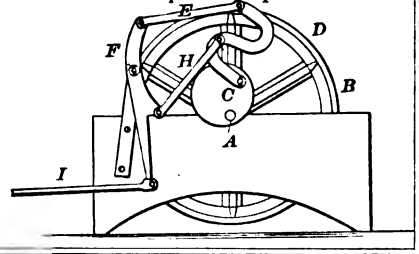

85863—W. H. Sible—*Sash Holder.*

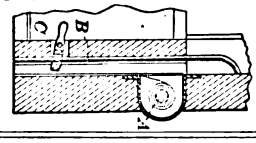

85866—O. W. Stanford—*Bed Bottom.*

85865—H. Spaulding—*Threshing Knife.*

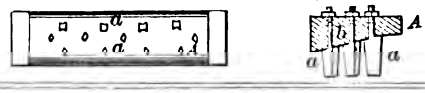

85867—S. F. Stanton—*Blind Fastener.*

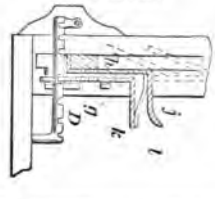

85868—Stevens & Denton—*Water Elevator.*

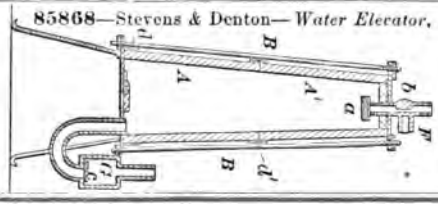

85869—W. Stinson—*Horse Rake.*

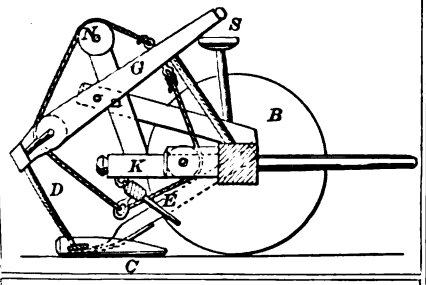

85870—O. O. Storle—*Harvester Rake.*

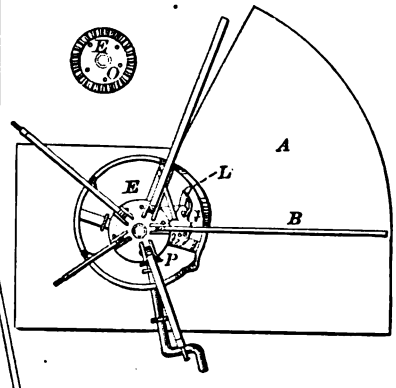

85872—E. Sweet—*Horse Rake.*

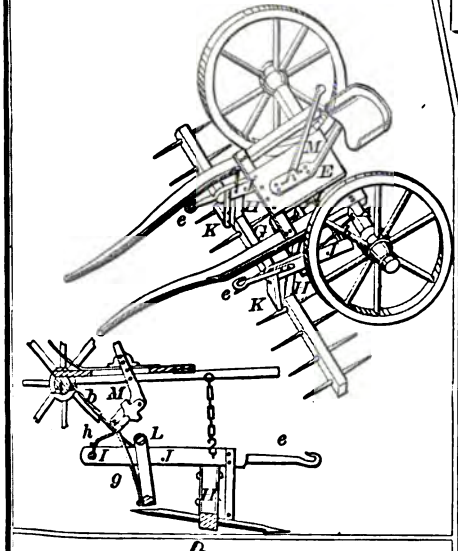

85878—T. Webb—*Beehive.*

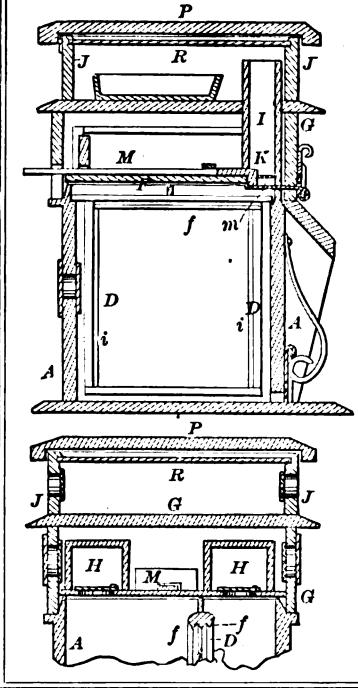

85874—H. Tilden—*Toy Bow Gun.*

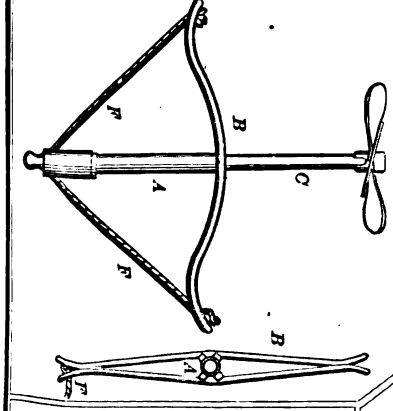

85873—A. L. Taylor—*Toy Cart.*

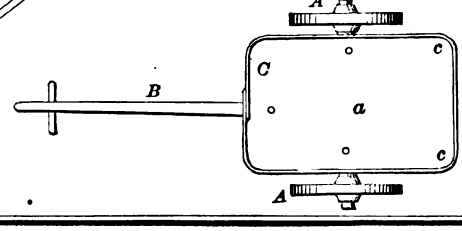

85876—M. Umstadler—*Hinge Stop*

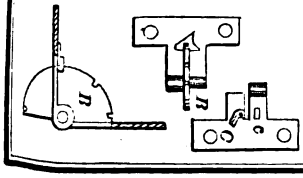

85877—L. Verstraet—*Hydro-Carbon Burner.*

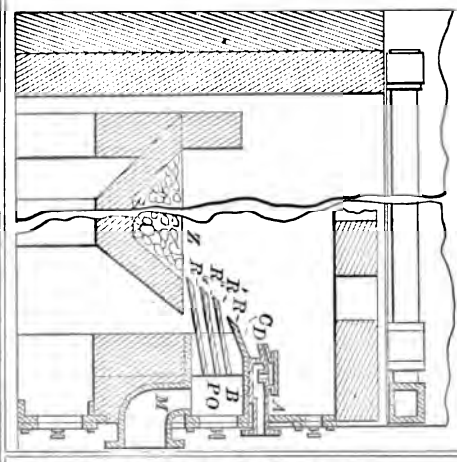

85882—W. F. Whitney—*Gate.*

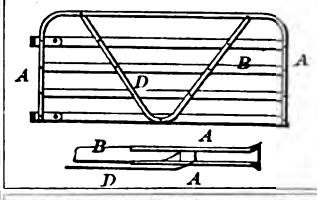

85883—G. C. Winchester—*Chair Seat.*

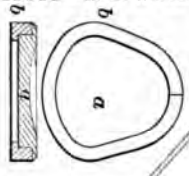

85880—J. Westhafer—*Clover Harvester.*

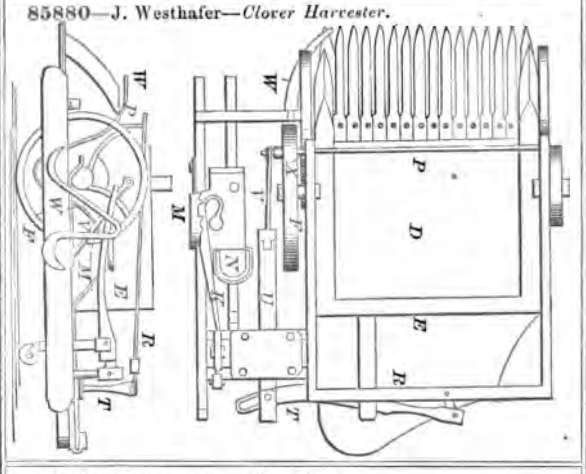

85879—L. W. Werner—*Hydrant.*

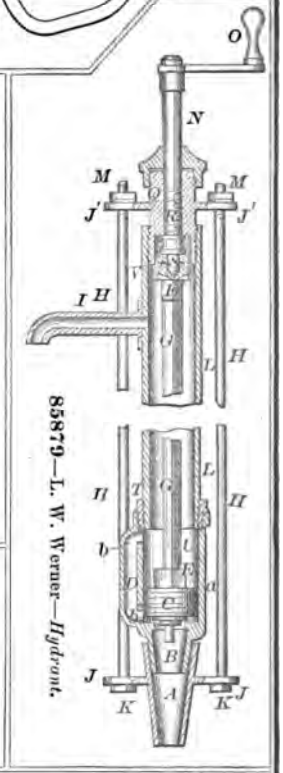

85886—G. Yeomans—*Farm Gate.*

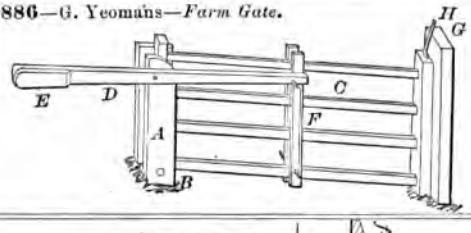

85884—J. Wood—*Beehive.*

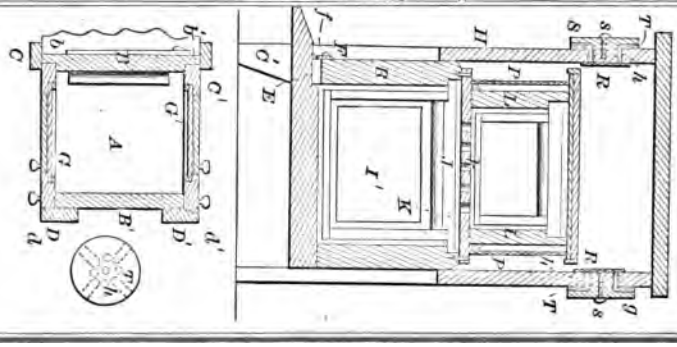

85881—E. Westman—*For Roasting and Calcining Ores.*

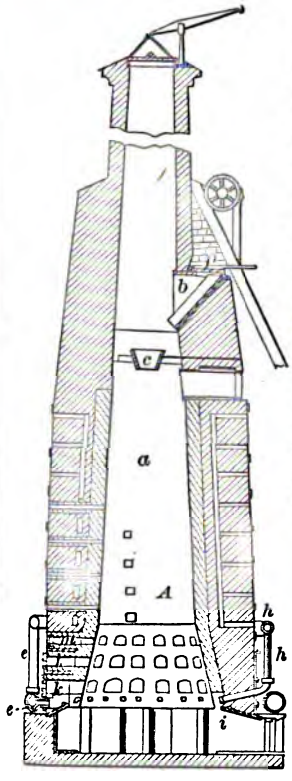

85885—A. T. Wright—*Beehive.*

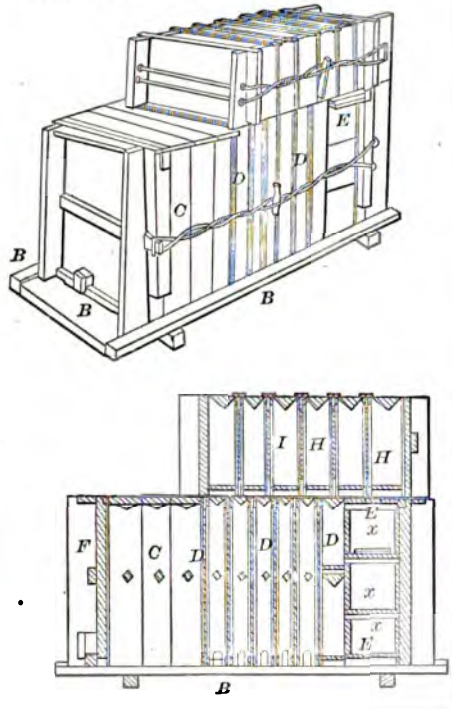

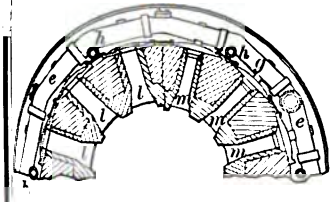

85887—G. W. N. Yost—*Harvester.*

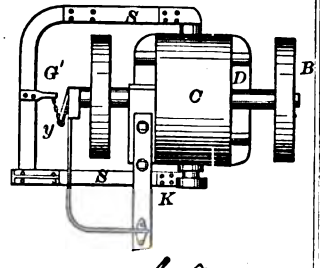

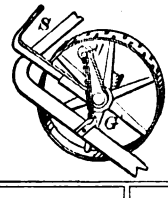

85888—H. Ball—*Tamping Plug.*

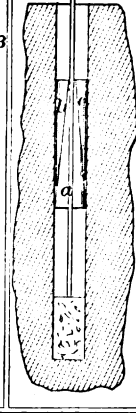

85890—O. H. Jewell—*Piston Rod Packing.*

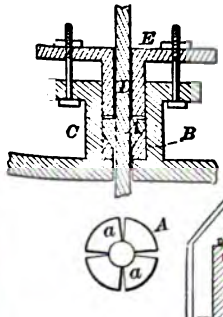

85889—A. V. T. Barberie—*Piano Forte.*

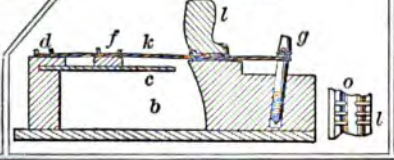

85891—T. K. Reed—*Machine Made Stitch.*

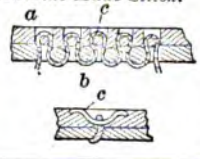

85892—E. Adams—*Water Wheel.*

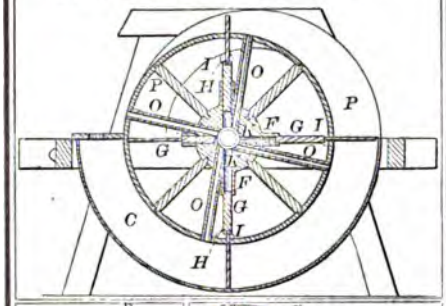

85894—R. Atkinson—*Sewing Machine.*

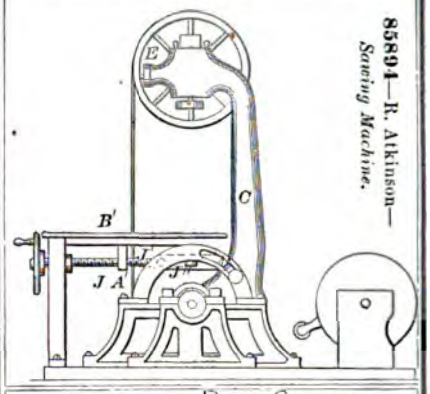

85895—S. R. Bailey—*Sleigh.*

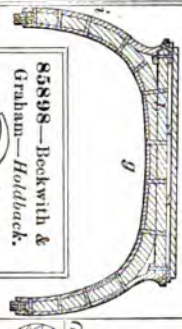

85898—Beckwith & Graham—*Holdback.*

85896—S. R. Bailey—*Sleigh Bottom.*

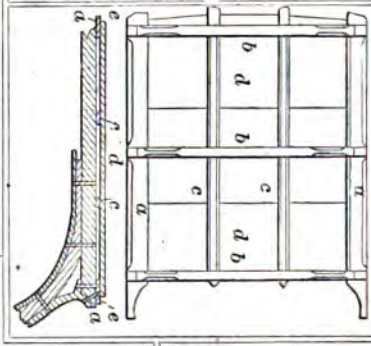

85899—E. F. Bradley—*For Applying Strengthening Patches to Button Holes of Collars.*

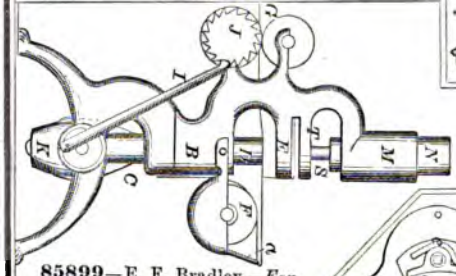

85900—Bradshaw & Brown—*Water Meter.*

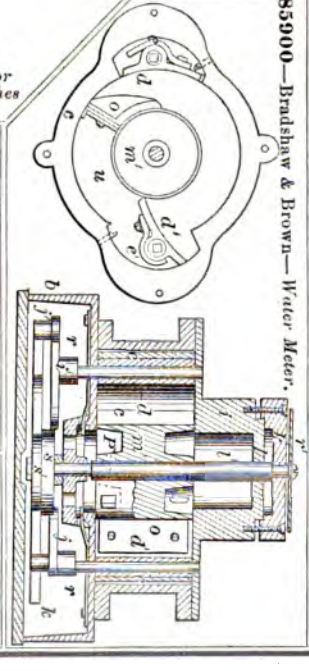

85897—C. W. Baldwin—*Fire Arm.*

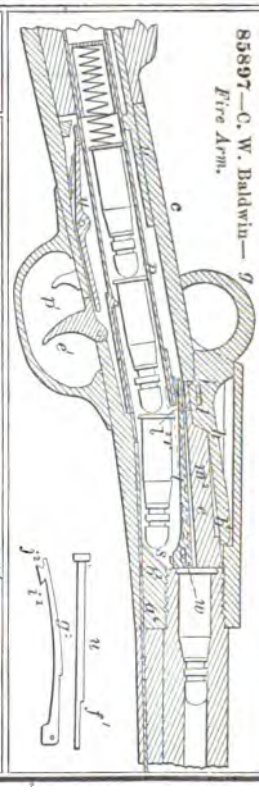

85902—T. W. Brown—*Butt.*

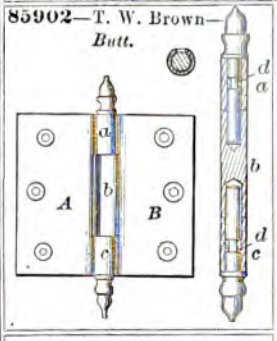

85901—A. G. Brewer—*Pedal for Pianos.*

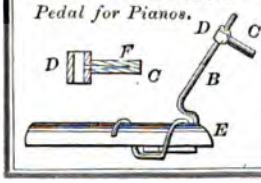

85903—W. Calhoun—*Bung.*

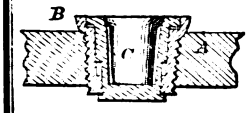

85904—C. Carr—*Iron Planer.*

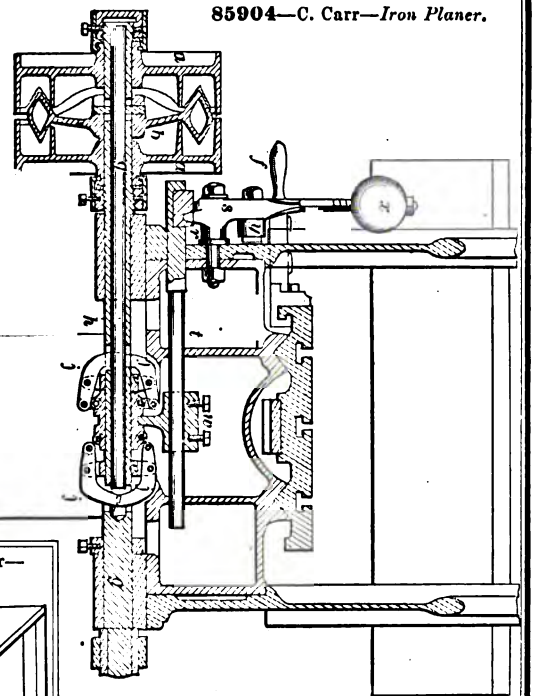

85907—Clark & Whitney—*Seed Sower.*

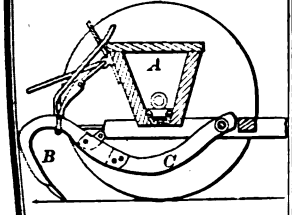

85906—Chester & Bürstenbinder—*Preparing Nitro-Glycerine.*

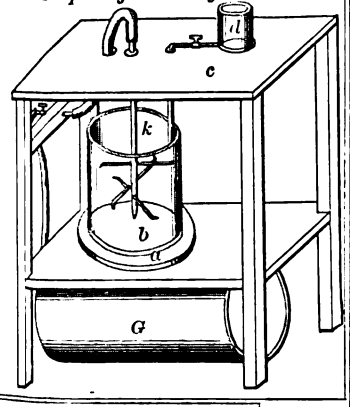

85905—B. F. Carter—*Loom.*

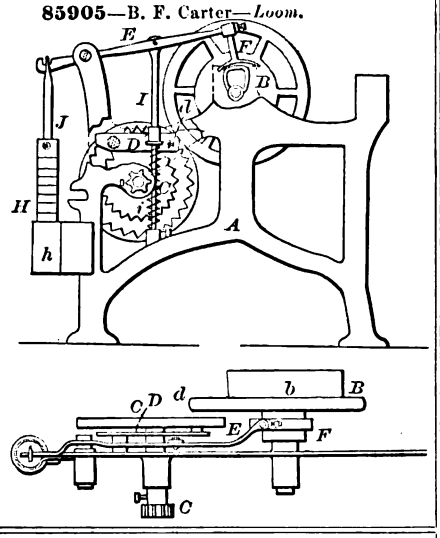

85908—Colby & Gilman—*Carpet Stretcher, Tack Driver and Puller.*

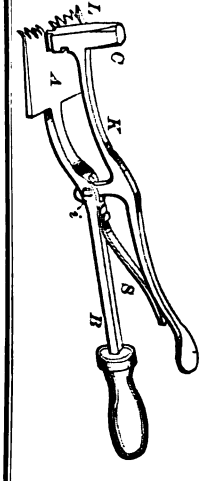

85909—W. S. Cooper—*Water Closet Valve.*

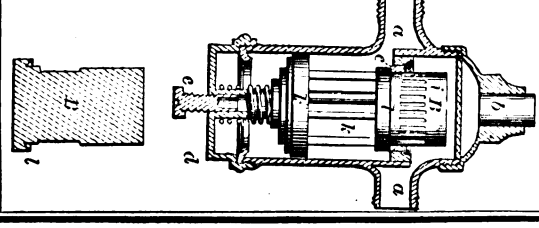

85910—A. W. Cram—*Condenser for Spirits, Steam and other Vapors.*

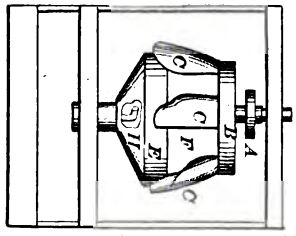

85911—J. H. & W. H. Crawford—*For Cutting Shingle Bands.*

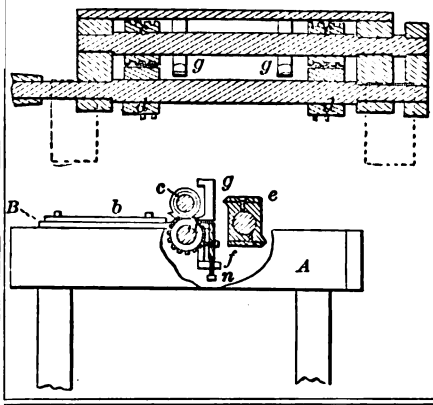

85914—W. Davis—*For Preserving and and Transporting Fish.*

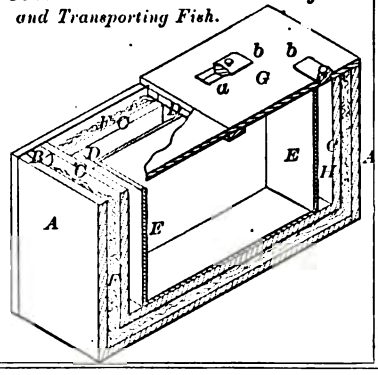

85913—W. Davis—*Freezing Box for Fish, &c.*

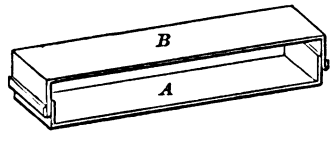

85916—W. A. Ditson—*Reeling and Measuring Yarn.*

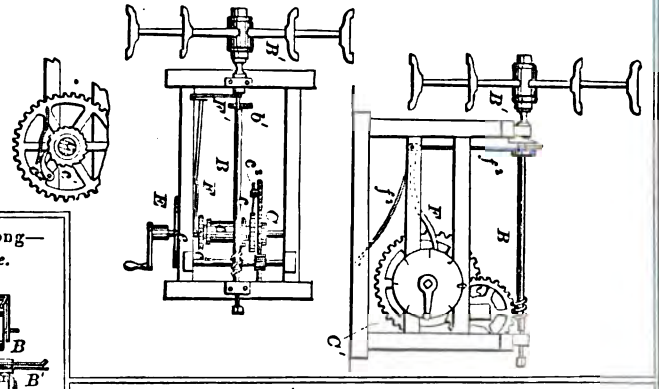

85915—B. De Long—*Mucilage Bottle.*

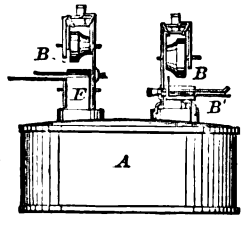

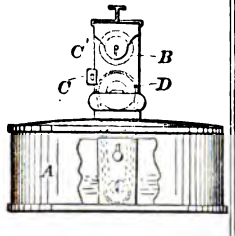

85917—S. Downing—*For Straightening Railroad Bars.*

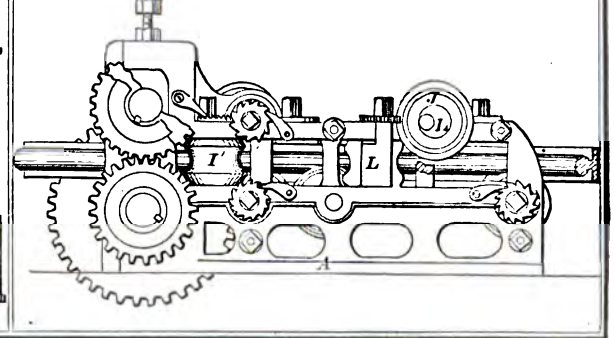

85918—J. F. Elliott—*Sewing Machine Table.*

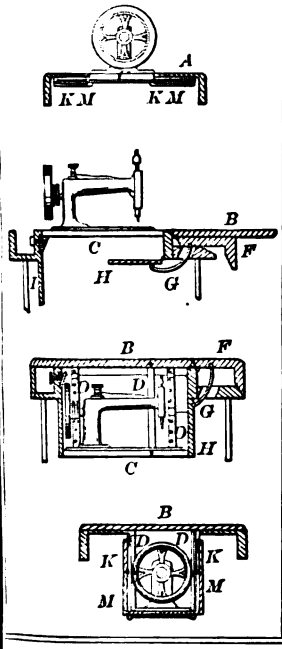

85919—M. Fitzgibbons—*Trunk.*

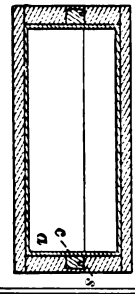

85920—A. Foot—*Milk Cooler.*

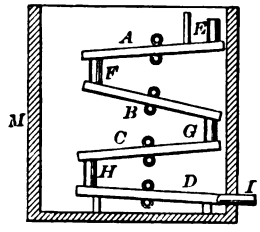

85921—F. E. Foster—*Lamp Shade.*

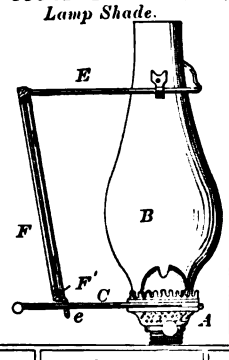

85922—W. Fuzzard—*Plaiting Fabric.*

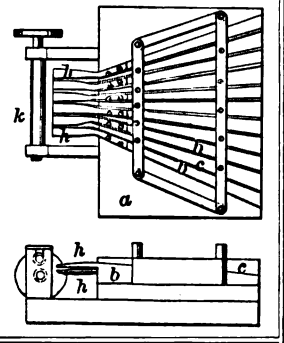

85923—R. M. Garrettson—*Thill Coupling.*

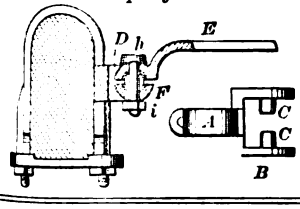

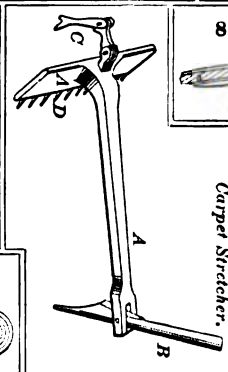

85924—Gilles & Wendell—*School Desk.*

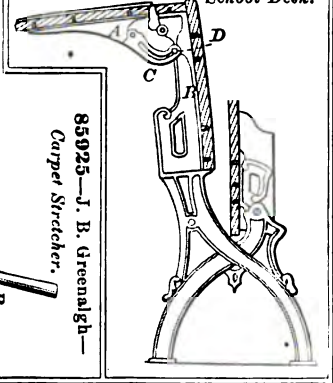

85925—J. B. Greenalgh—*Carpet Stretcher.*

85926—M. Grover—*Pitman.*

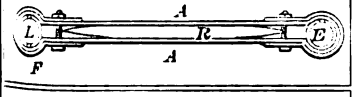

85928—D. E. Hall—*Pen Holder.*

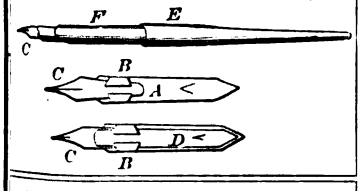

85929—D. E. Hall—*Band Fastening.*

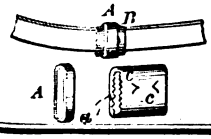

85930—N. Hawkins—*Elevator Bucket.*

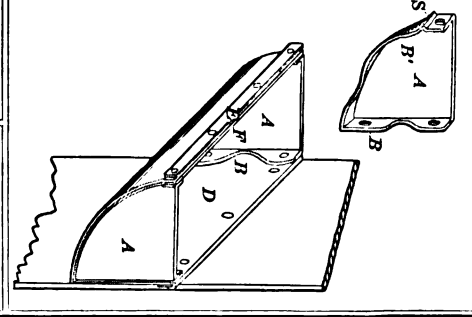

85931—T. Hessenbruch—*Stove Pipe Damper.*

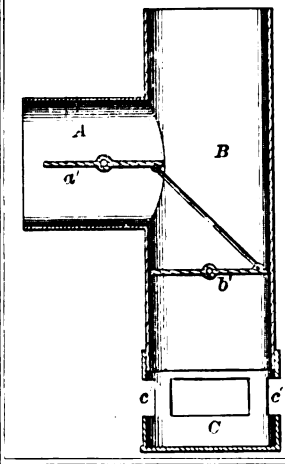

85932—P. M. Hinman—*Fruit Jar.*

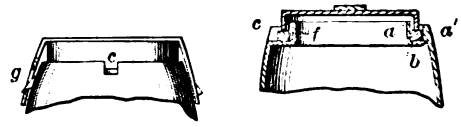

85934—G B. Isham—*Cooking Apparatus.*

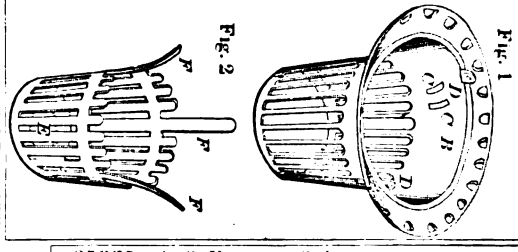

85935—A. C. Kasson—*Sled.*

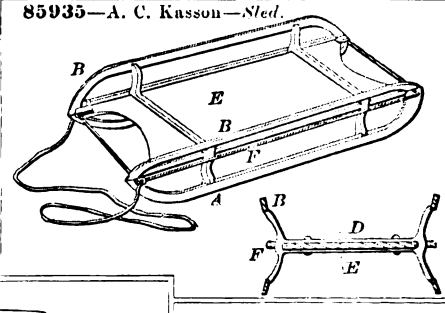

85933—T. H. Hutchinson—*Churn.*

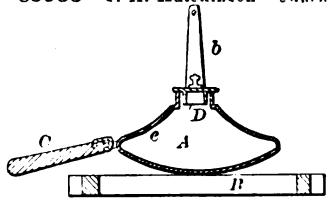

85936—D. Keller—*Dredge Chuck.*

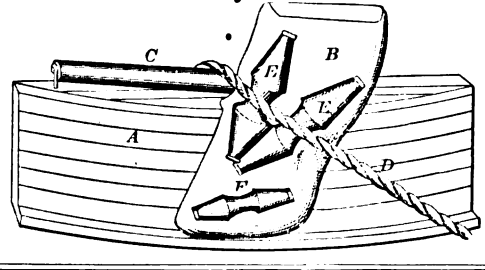

85938—J. M. Kirkpatrick—*Furniture Spring.*

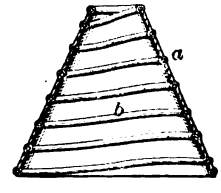

85939—F. G. Lafayette—*Flooring Clamp.*

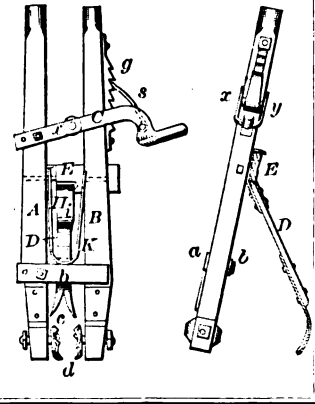

85937—F. D. Kennedy—*Warming Sleighs.*

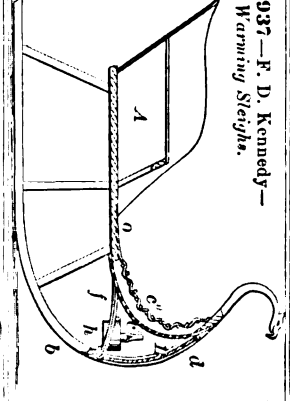

85940—J. Lawson—*Straw Cylinder.*

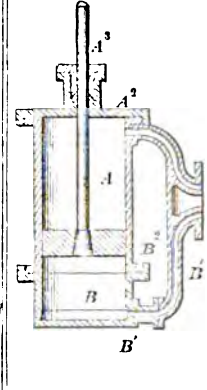

85941—S. F. Leach—*Saw Set.*

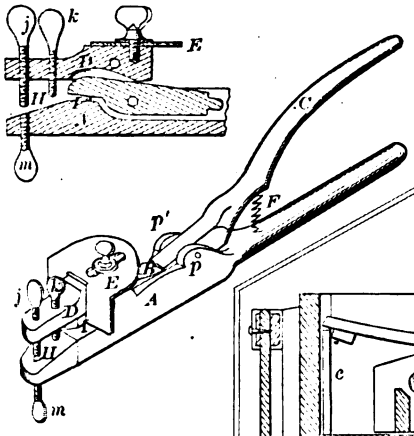

85946—N. F. Mathewson—*Carriage Curtain Button.*

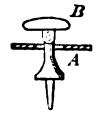

85943—P. H. Lewis—*Washing Machine.*

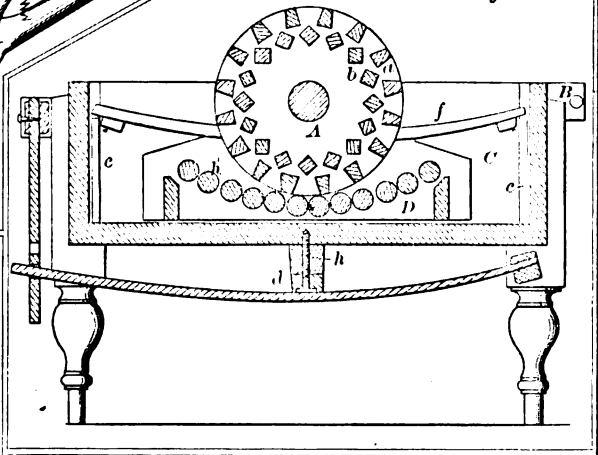

85949—J. A. McKenzie—*Shot Gun Muzzle.*

85942—W. Leighty—*Washing Machine.*

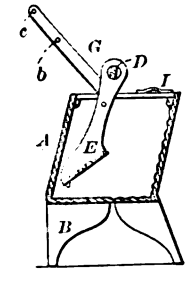

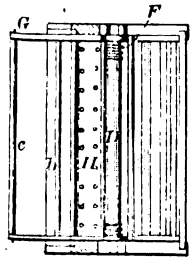

85944—T. Malley—*Drying Hair.*

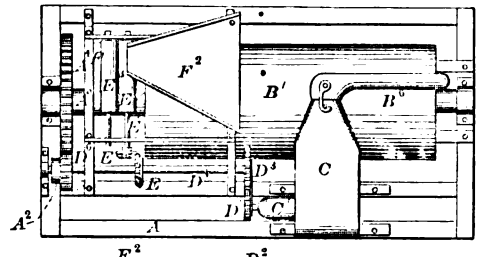

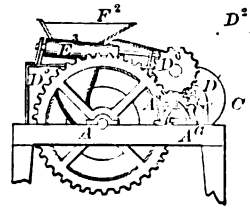

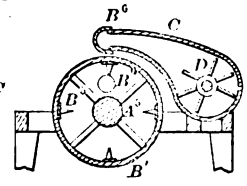

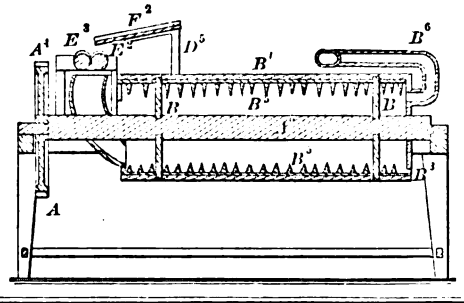

85947—McFerran & Blunt—*Wagon Body.*

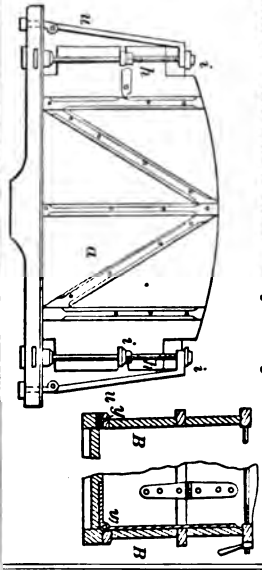

85948—W. A. McGlaughlin—*Dressing Millstones.*

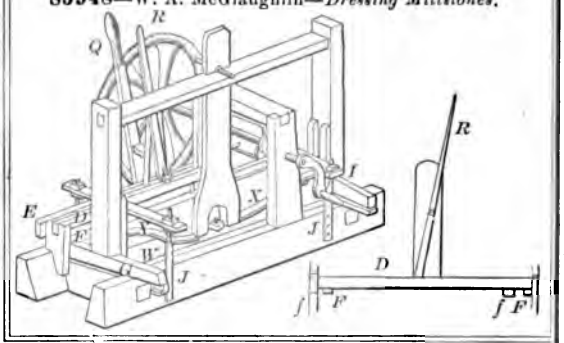

85950—C. C. Millar—*Sleeping Car.*

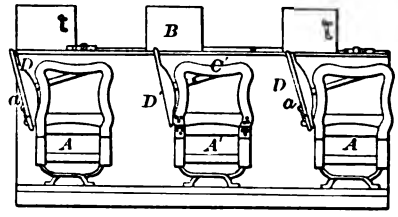

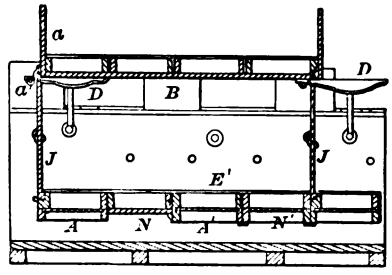

85951—W. Millikan—*House Moving Truck.*

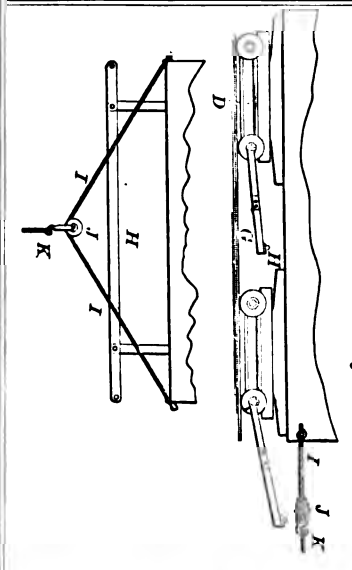

85952—J. H. Mills—*Hoisting Apparatus.*

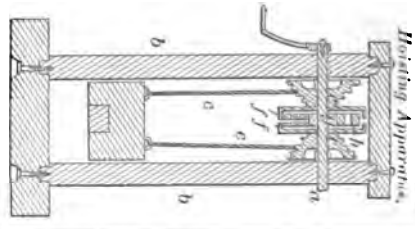

85954—J. H. Page—*Removing and Protecting Stores in Case of Fire.*

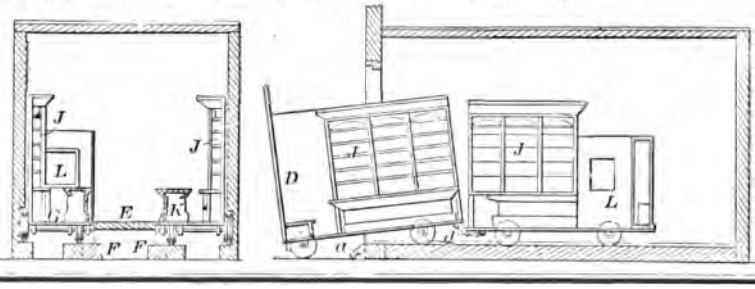

85953—F. Muller—*Window Shade Tassel Clip.*

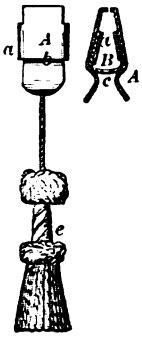

85955—P. Paille—*Defecating and Bleaching Cane Juice.*

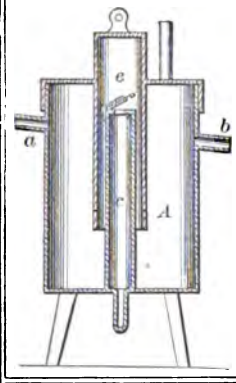

85957—Pitcher & Ellwood—*Coulter.*

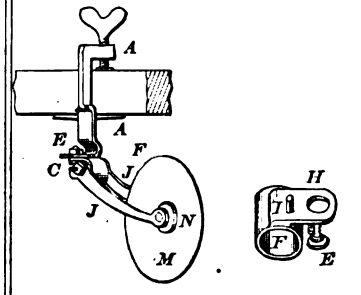

85959—J. T. Price—*Pen.*

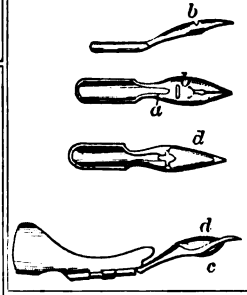

85960—A. M. Pugh—*Bed Bottom.*

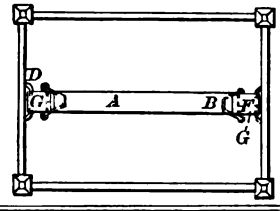

85961—J. Reckendorfer—*Attaching Rubber to Pencils.*

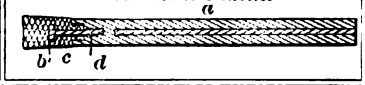

85956—F. S. Pinkham—*Holder for Broom and Brush Handles.*

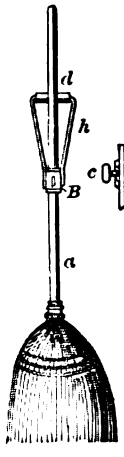

85962—G. C. Reeves—*Quartz Crusher.*

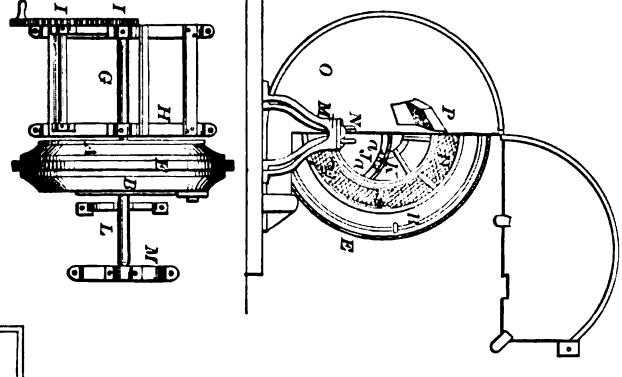

85964—J. C. Richardson—*Hat Finishing Machine.*

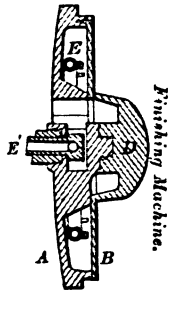

85963—G. W. Richardson—*Steam Safety Valve.*

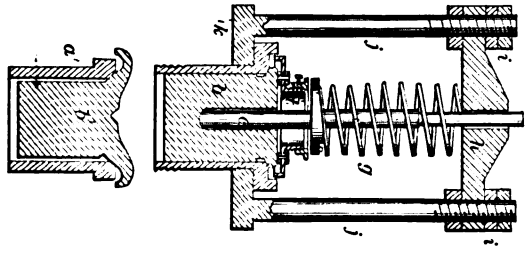

85965—T. J V. Roz—*Piano.*

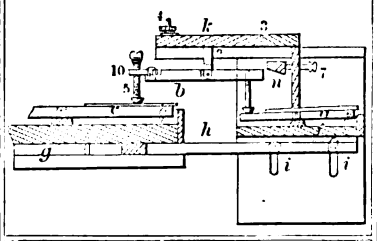

85967—C W. Saladee—*Churn.*

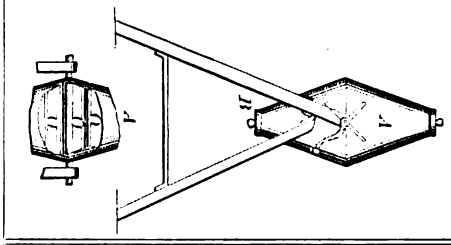

85966—A. Rutenfranz—*Seed Drill.*

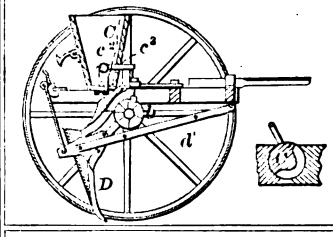

85968—S. B. Shank—*Corn Cultivator.*

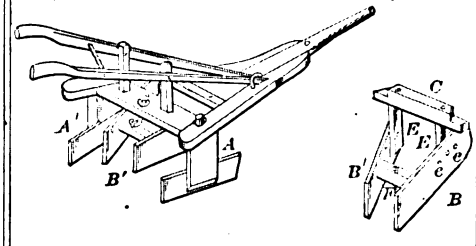

85969—A. Simpson—*Loom Shuttle.*

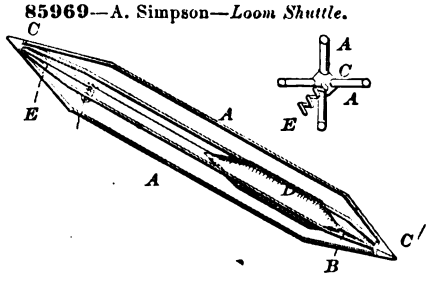

85970—C. H. Smith—*Churn and Butter Worker.*

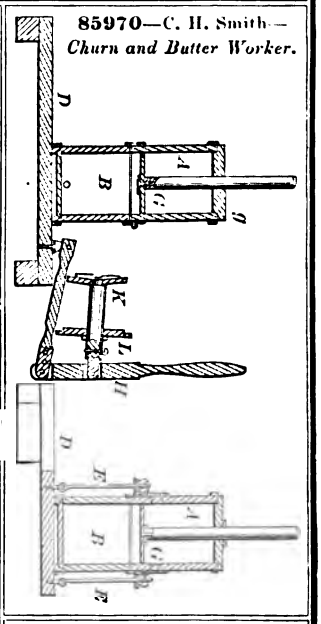

85971—F. F. Smith—*Plow Coulter.*

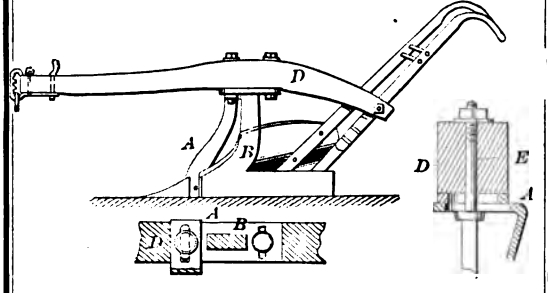

85972—J. H. Steiner—*Gas Generator.*

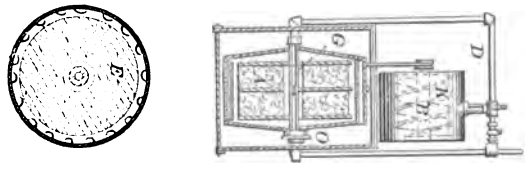

85974—J. T. Thornton—*Threshing Machine.*

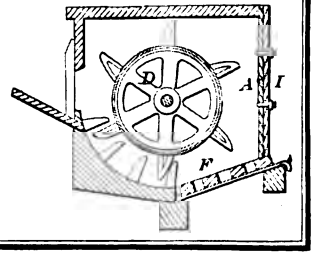

85973—W. A. Sublett—*Sash Lock.*

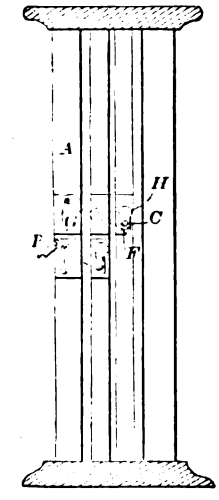

85975—B. D. Wheat—*Doffer for Carding Engines.*

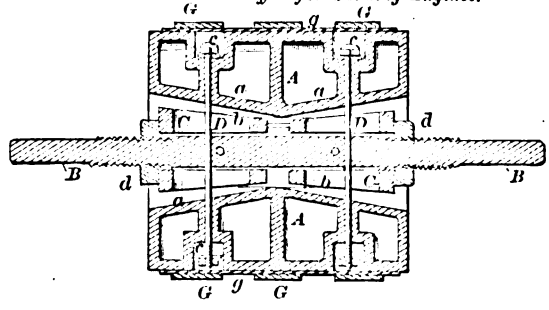

85976—E. S. Wheeler—*Carriage Knob.*

85977—A. Whelan—*Hinge.*

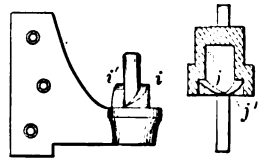

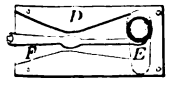

85979—J. T. Wilson—*Car Coupling.*

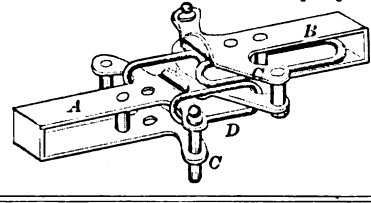

85978—F. H. Williams—*Safe.*

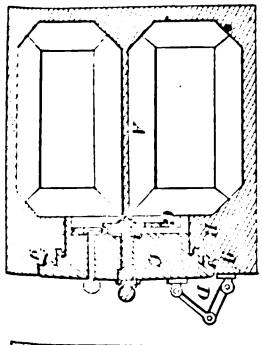

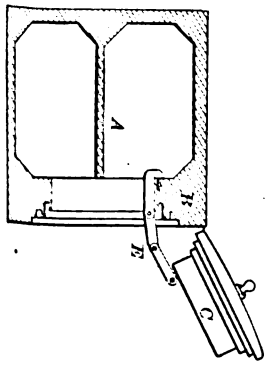

85980—S. Winslow—*Spring Bed Bottom.*

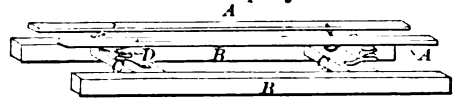

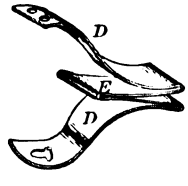

85981—J. C. Wood—*Loom.*

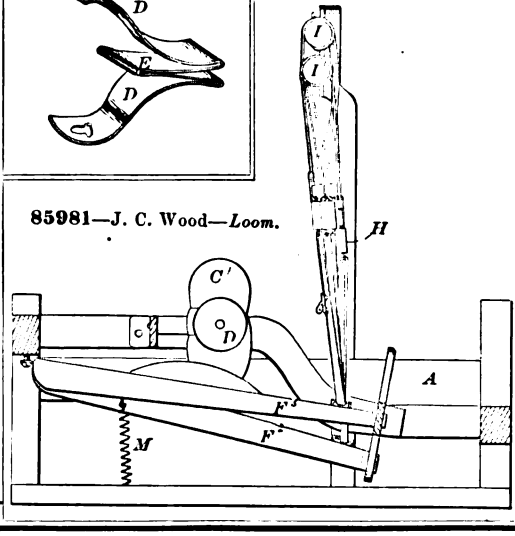

85982—D. Wyant—*Corn Plow and Marker.*

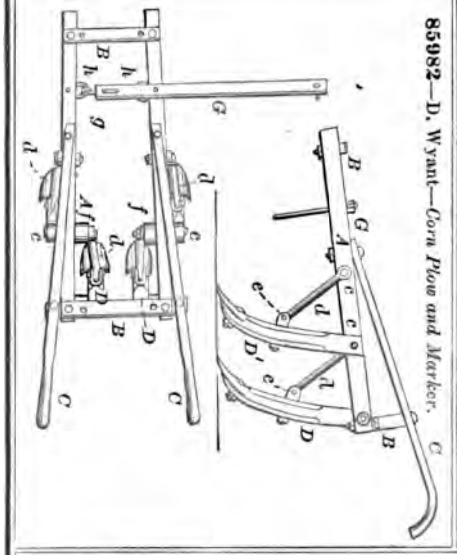

85983—J. R. Abbe—*For Heading Bolts.*

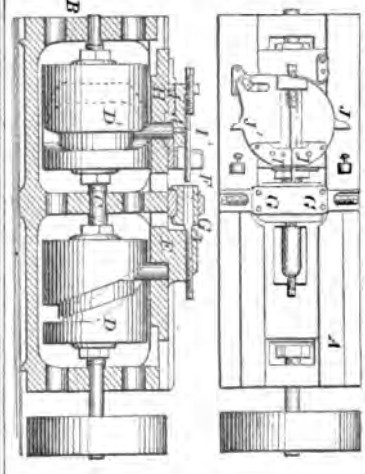

85984—Aikin & Bennett—*Sugar Cane Mill.*

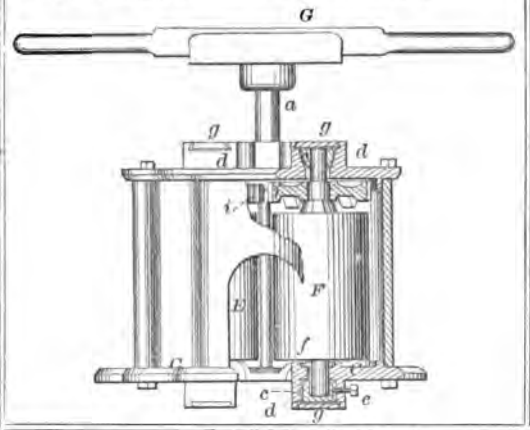

85986—S. J. Anderson—*Stove Pipe Shelf.*

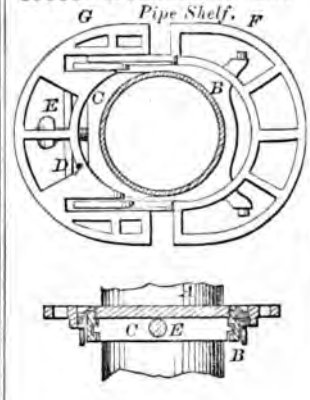

85985—Almqvist & Ofeldt—*Water Meter.*

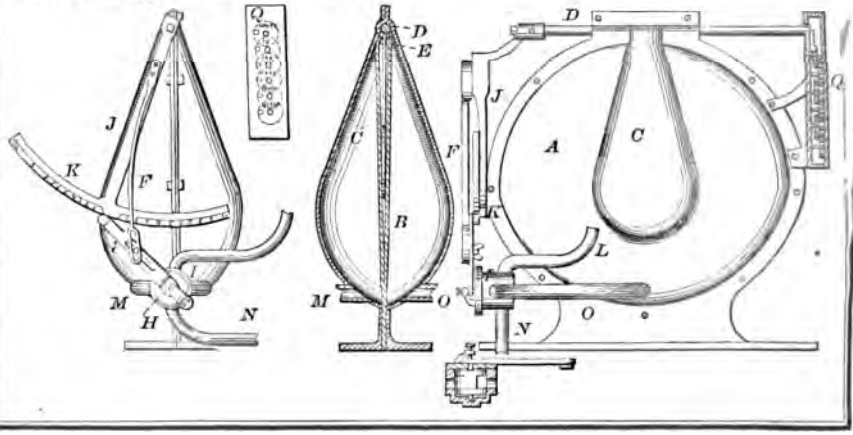

85987—J. H. Beatty—*Car Brake.*

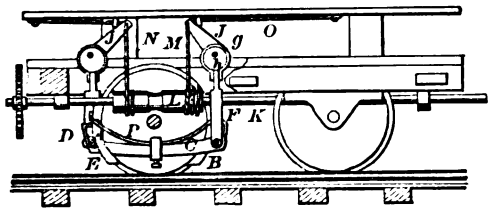

85988—Bertrand & Velut—*Packing for Steam Piston Rods.*

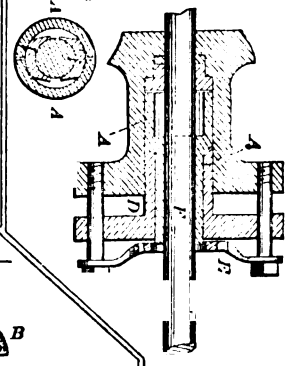

85989—L. R. Blake—*Boot.*

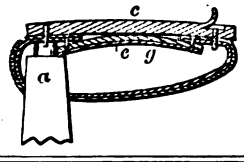

85991—R. A. Briggs—*Rule and Protractor.*

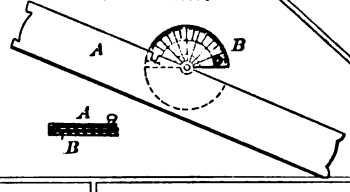

85990—L. Branson—*Geographic Game.*

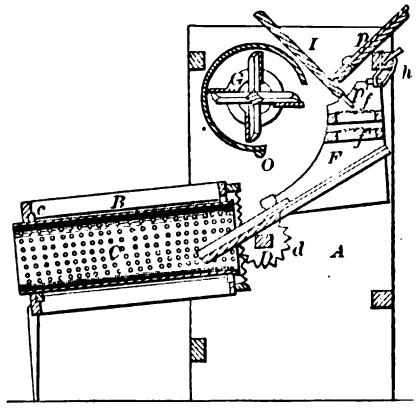

85992—G. E. Bringman—*Grain Separator.*

85993—C. H. Brown—*Straw Cutter.*

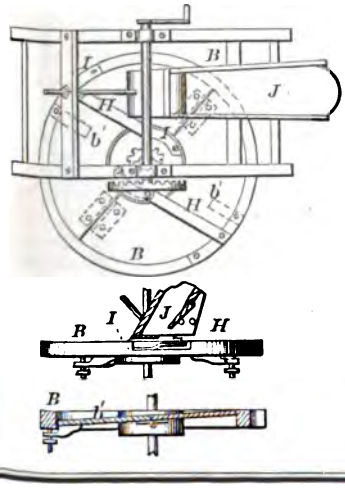

85994—J. Brown—*Potato Digger.*

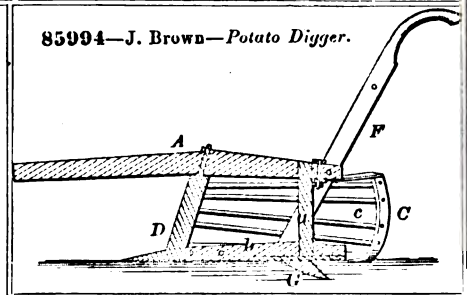

85995—C. W. Buffon—*Syringe.*

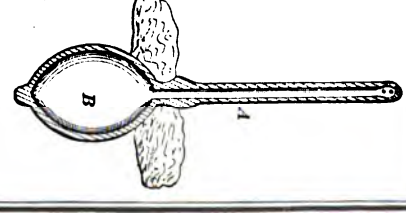

85996—D. P. Butler—*Gymnastic Apparatus.*

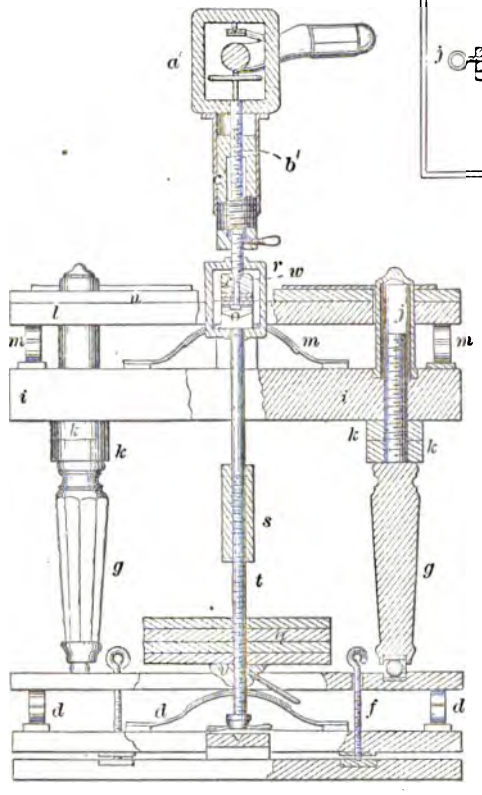

85997—Butler, Dunham & Wann—*For Sharpening Horse Shoe Calks.*

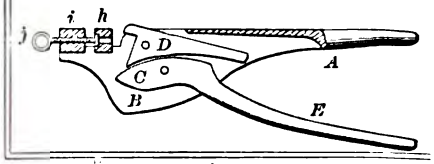

85998—R. T. Burnett—*Meat Smoking Apparatus.*

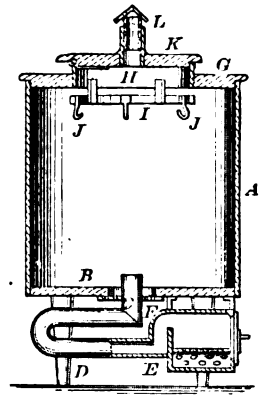

85999—Carter & Edwards—*Fire Arm.*

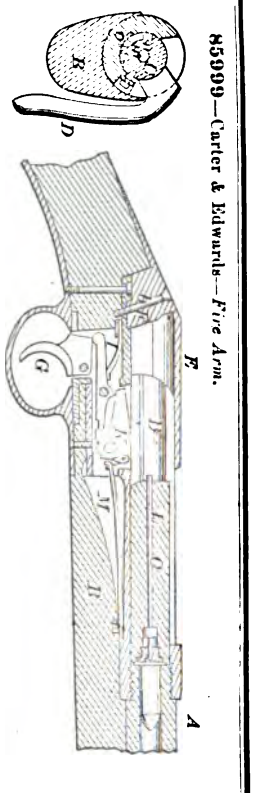

86000—F. A. Clark—*Sled Brake.*

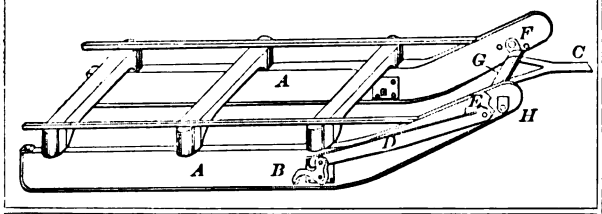

86001—C. W. Coe—*Drilling and Boat Tapping Machine.*

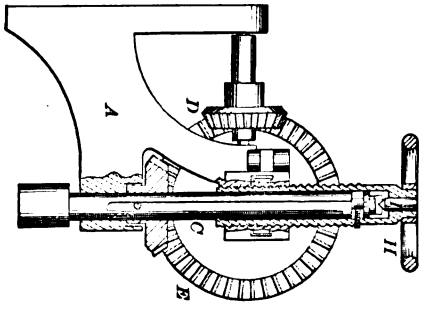

86002—J. B. Coffman—*Churn.*

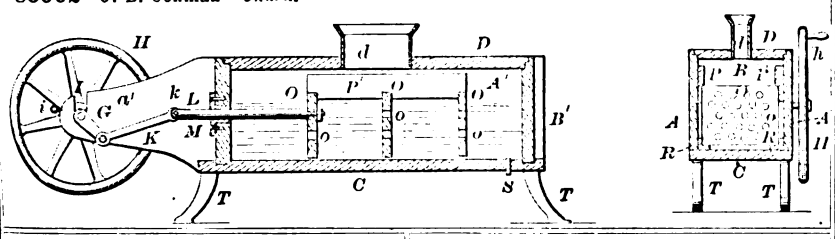

86005—G. W. Dana—*Permutation Lock.*

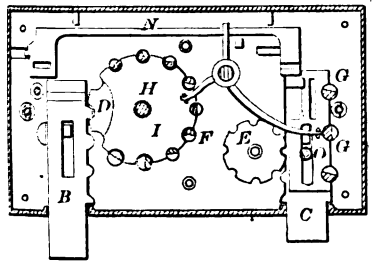

86003—J. H. Coleman—*Cultivator.*

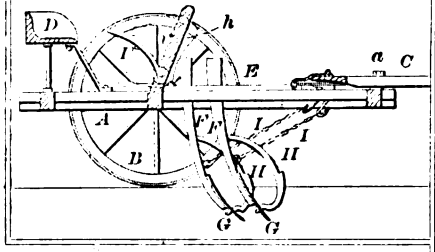

86007—A. W. Dorr—*Brake Block Holder.*

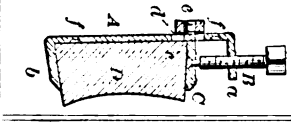

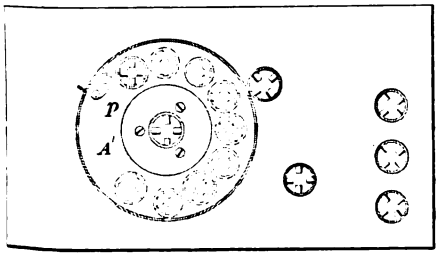

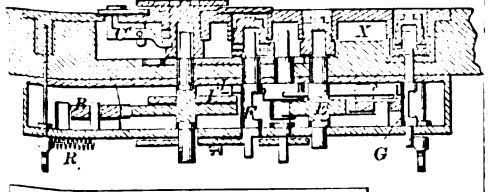

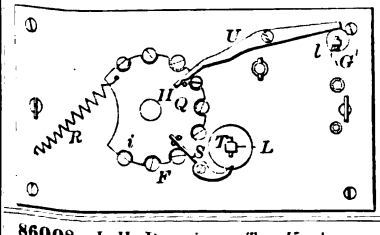

86006—F. W. Dexter—*Hub Boring Machine.*

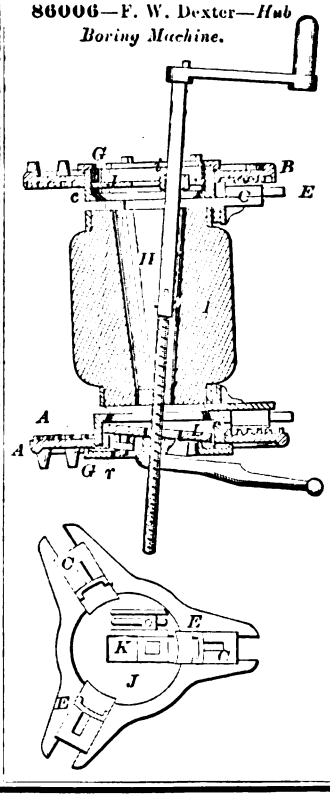

86008—J. H. Downing—*Tea Kettle.*

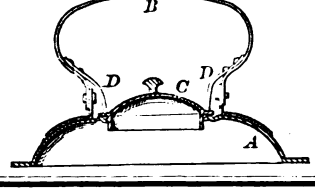

86009—I. Dreyfus—*Lubricating Cup.*

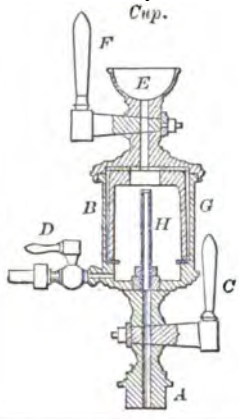

86010—M. Fowks—*For Grinding Mowing Machine Cutters.*

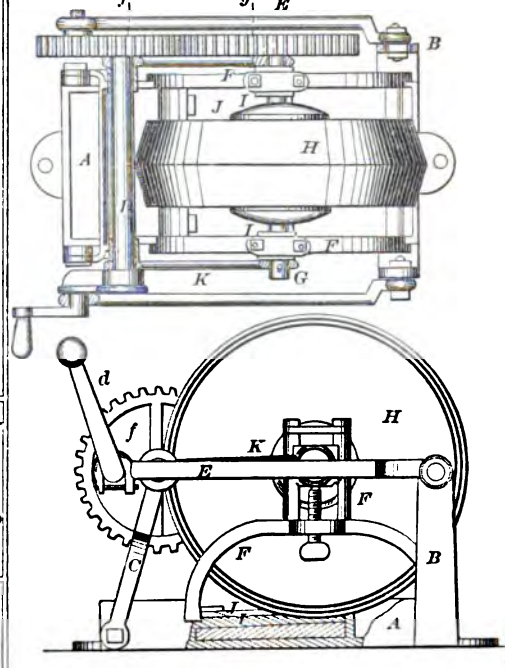

86011—W. H. Hall—*Car Coupling.*

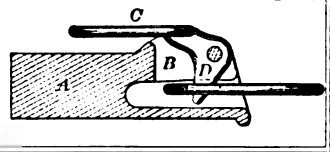

86014—H. S. Hitner—*Horse Shoe.*

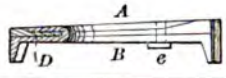

86015—J. E. T. Holmes—*For Dressing and Shaping Stone.*

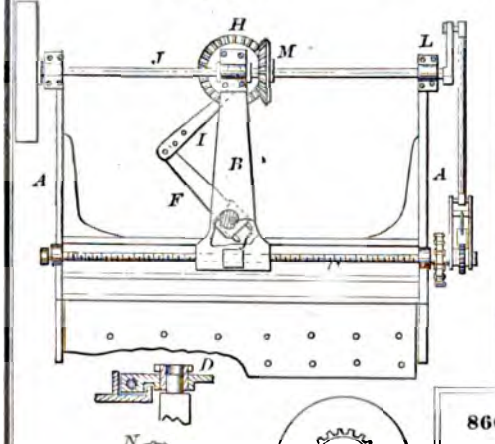

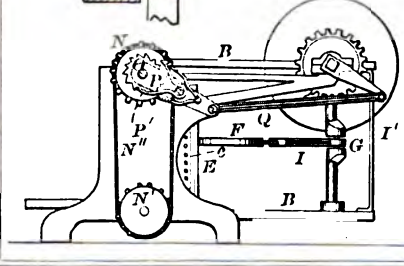

86017—Z. Hunt—*Stove.*

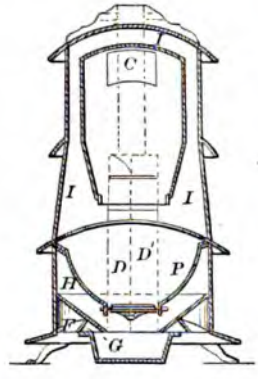

86013—W. D. Hillis—*Wash Boiler.*

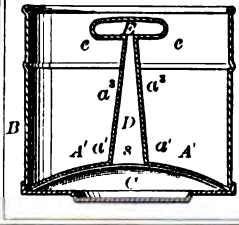

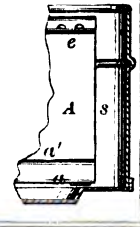

86016—S. J. Howell—*For Treating Gun Shot Wounds and Extracting Bullets.*

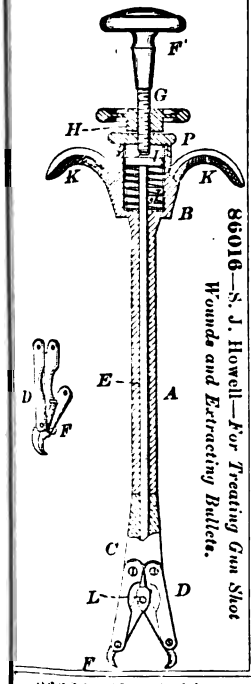

86019—H. C. Kellogg—*Sower and Cultivator.*

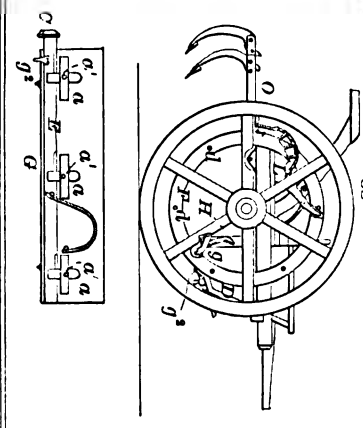

86020—H. P. Kreiner—*Stop Cock.*

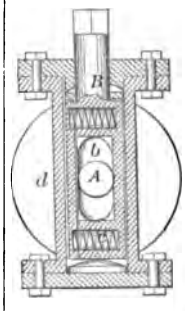

86021—H. & H. W. Lovejoy & Ferguson—*Electrotype and Stereotype Plate.*

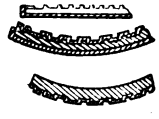

86022—R. R. Martino—*Reed for Musical Instruments.*

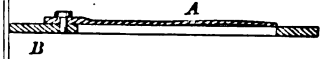

86024—May & Stivers—*Hydro-Carbon Burner.*

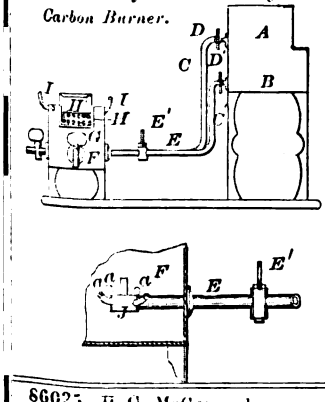

86023—Masten & Van Vlack—*Beehive,*

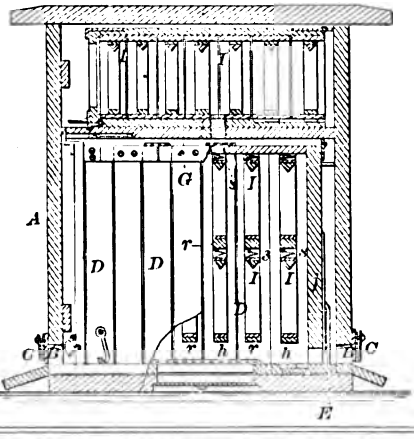

86025—H. G. McGonegal—*Pavement.*

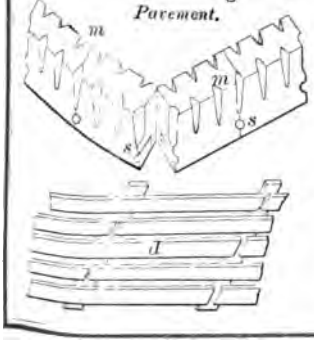

86026—D. E. McSherry—*Seeding Machine.*

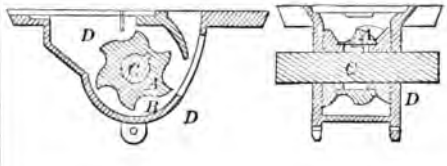

86027—S. P. Mervine Jr.—*Gas Regulator.*

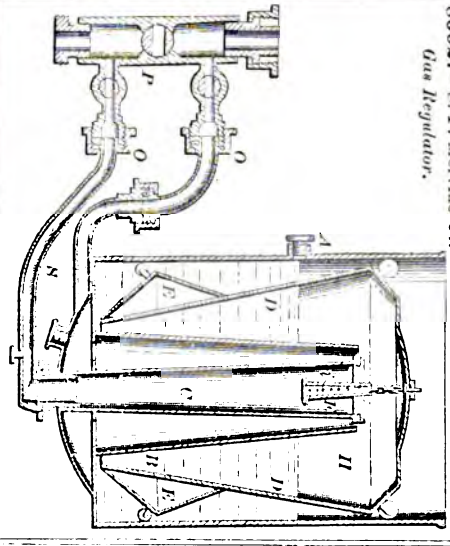

86028—R. Montgomery—*Metallic Column.*

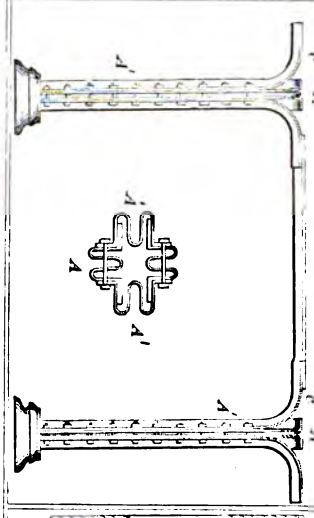

86029—B. F. Morey—*Wagon Tire.*

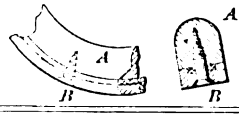

86030—A. Morton—*Injector.*

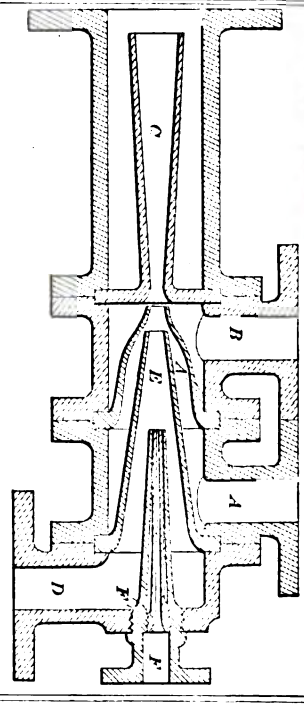

86032—D. Packard—*Brick Machine.*

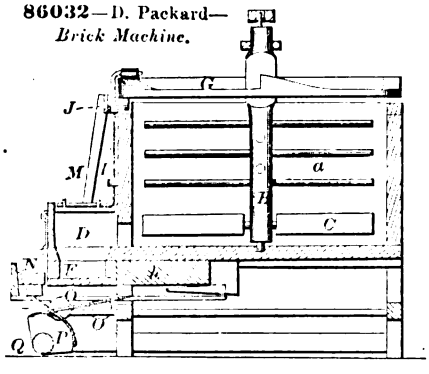

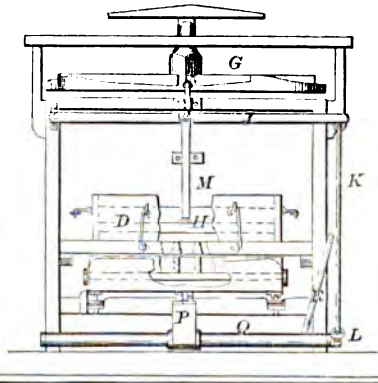

86031—W. S. Nelson—*Skating Floor.*

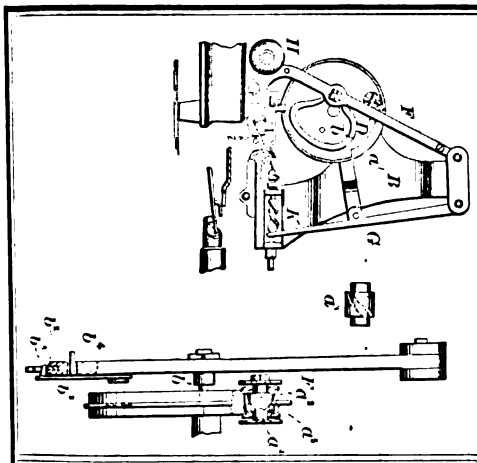

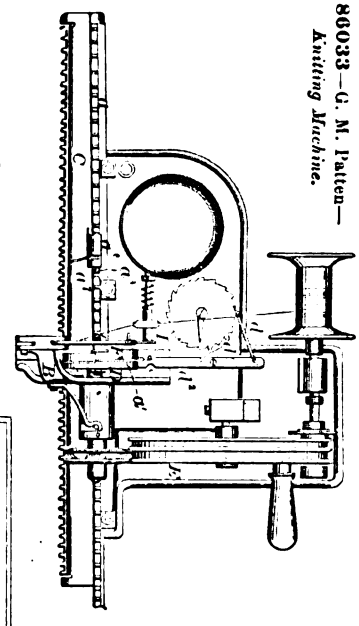

86033—G. M. Patten—*Knitting Machine.*

86036—J. H. Sawyer—*Wagon.*

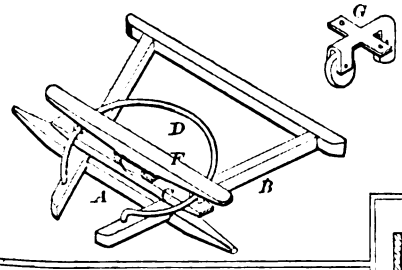

86037—B. F. See—*Beehive.*

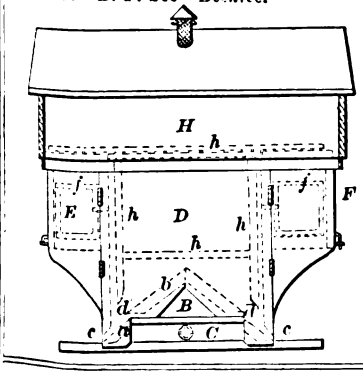

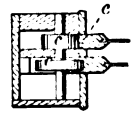

86034—T. T. Prosser—*Sash Balance.*

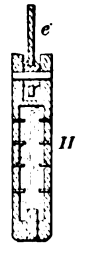

86038—C. Seimel—*Sheet Metal Can.*

Fig. 2

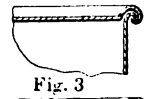

Fig. 3

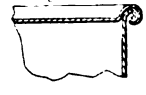

86039—Shorte & Todd *Milk Can.*

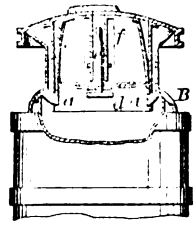

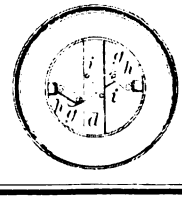

86035—A. J. Redway—*Fire Blower.*

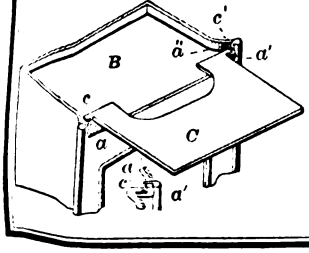

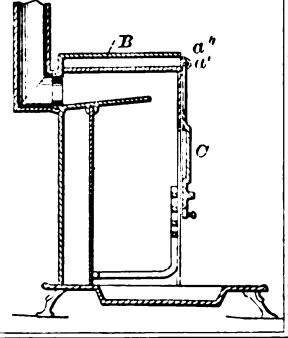

86041—J. D. Spang—*Gasoline Cook Stove.*

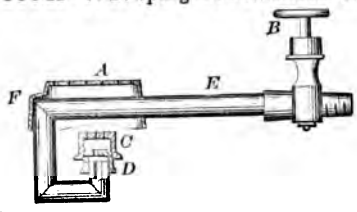

86042—H. M. Stow—*Omnibus.*

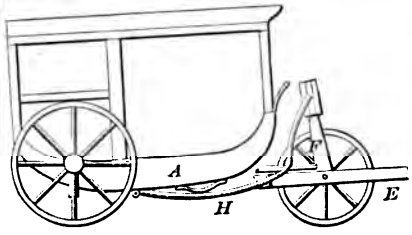

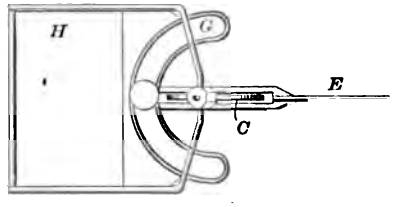

86043—N L. Tomlinson—*Steering Apparatus.*

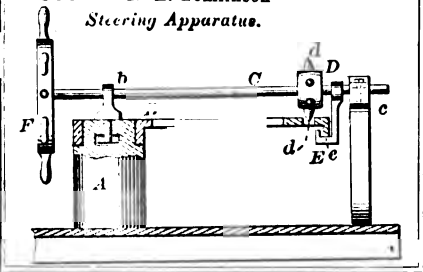

86044—Tripp & Boyd—*Curtain Fixture.*

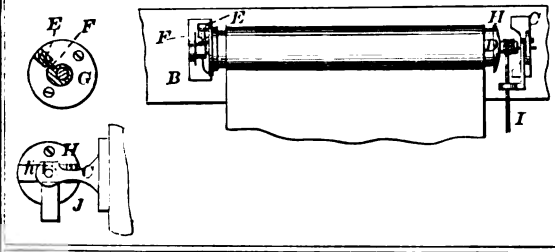

86045—J. T. Vaughn—*Peach Cutter.*

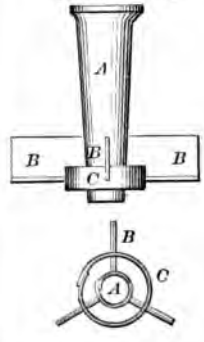

86046—P. Vera—*For Generating Heat by Friction.*

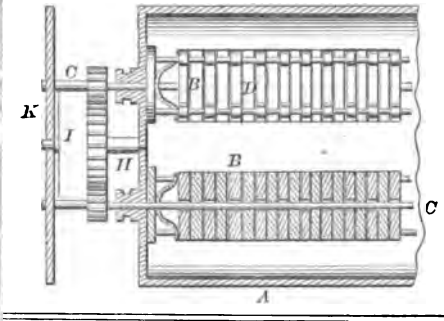

86048—C. Wetzler—*Implement.*

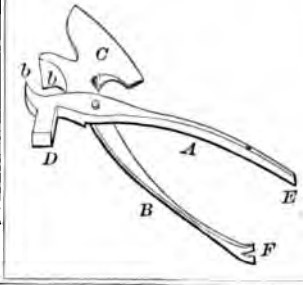

86049—C. F. Woodruff—*Boot Heel and Spur.*

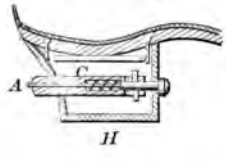

86052—R. Ayres—*Sled Brake.*

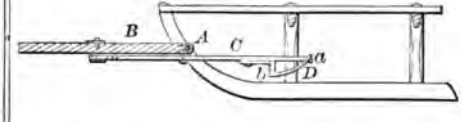

86050—J. Absterdam—*Refining and Purifying Iron.*

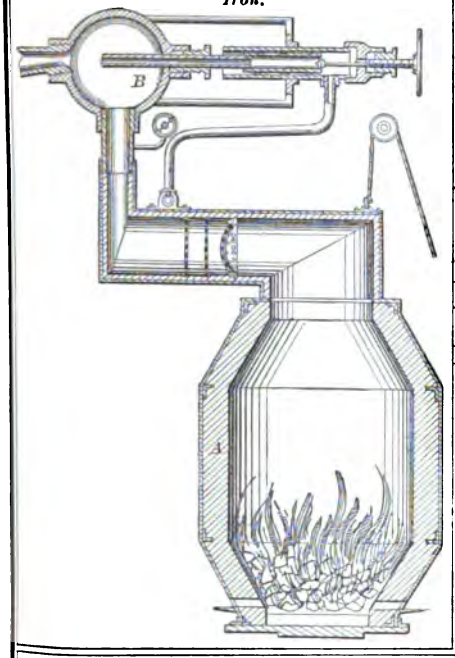

86051—H. R. Atwood—*Reefing Sails.*

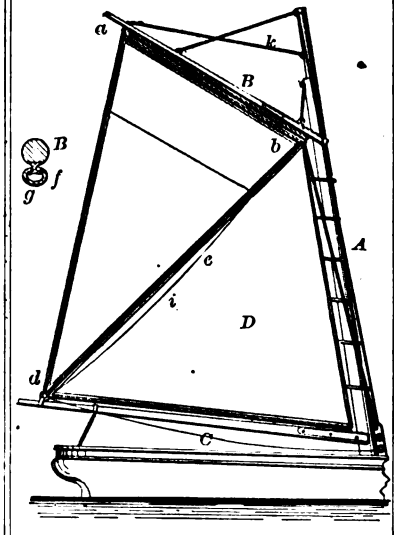

86053—D. D. Bigelow—*Railway Rail Chair.*

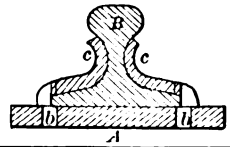

86055—Brown & Hunt—*Hand Power Loom.*

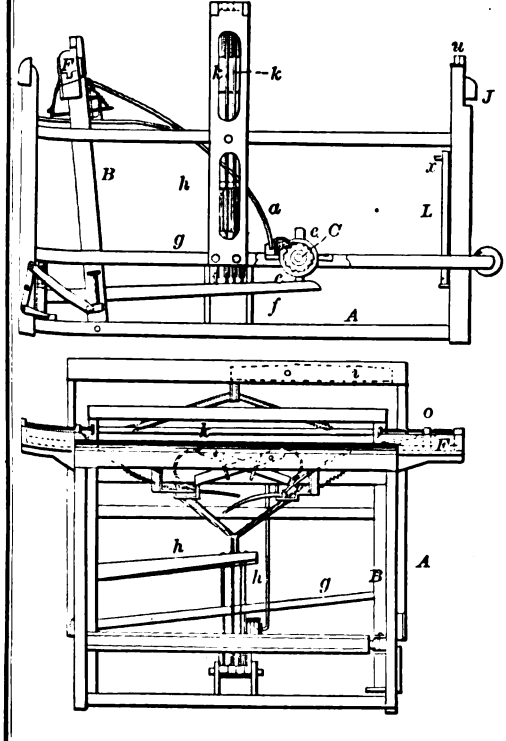

86054—L. R. Blake—*Shoe Pegging and Nailing Machine.*

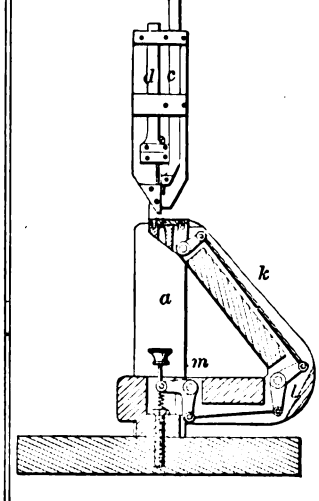

86057—F. P. Canfield—*For Sewing Parallel Seams.*

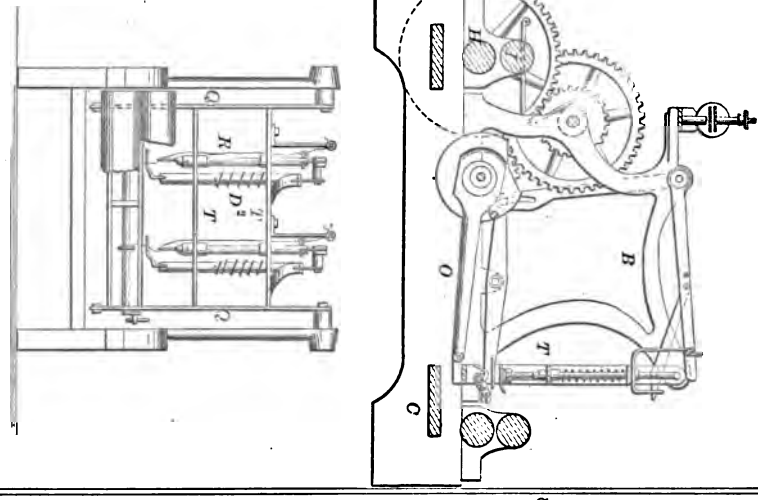

86058—T. Christy—*Paper "Satining" Machine.*

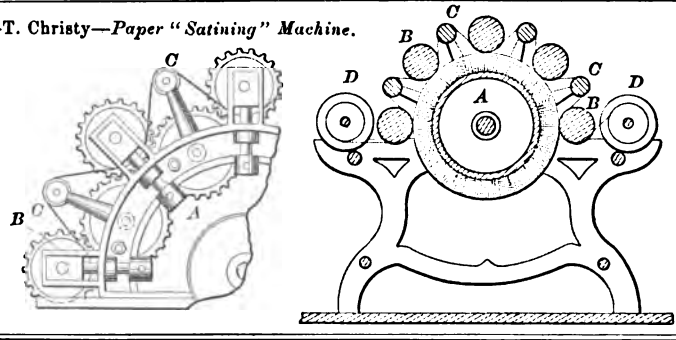

86059—E. Cowles—*For Making Candles.*

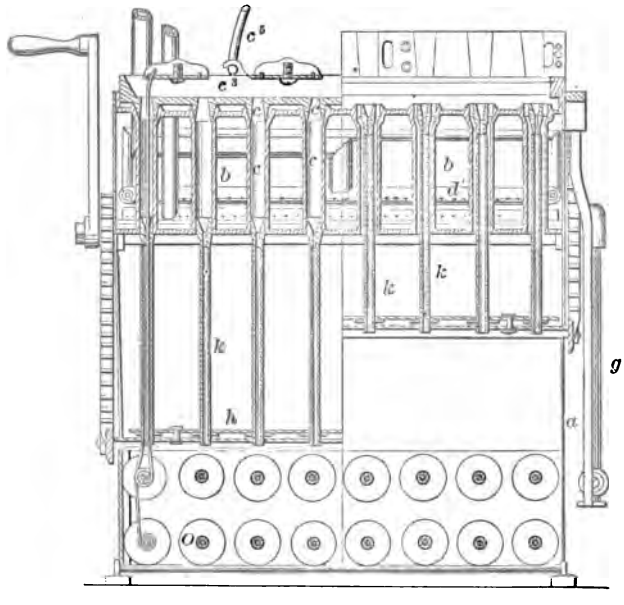

86060—F. Creamer—*Mechanical Movement.*

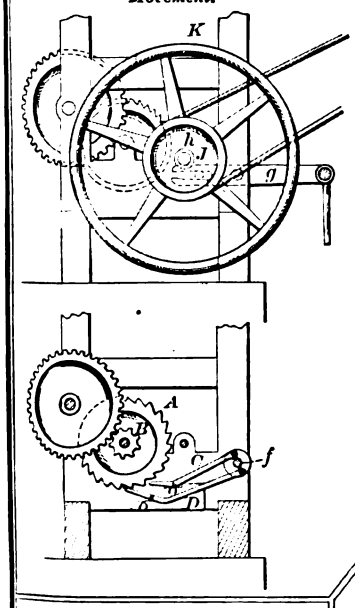

86063—T. S Engledow—*Beehive.*

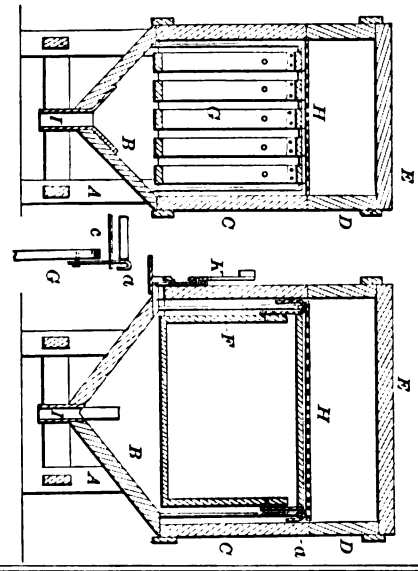

86062—W. A. Devon—*Sash Holder.*

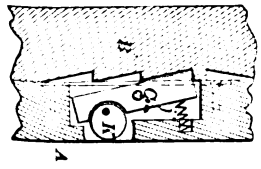

86061—S. W. Davis—*Horse Power.*

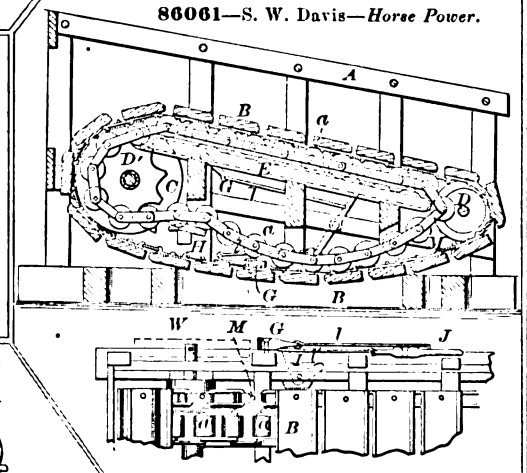

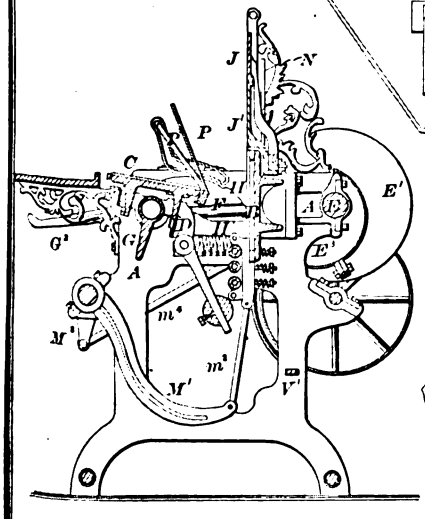

86064—W. H. Forbush—*Printing Press.*

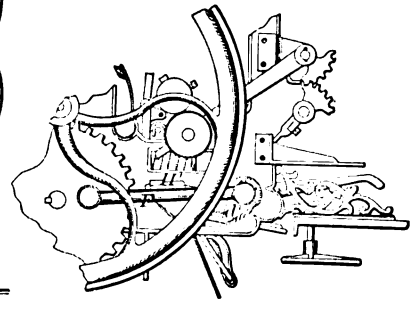

86064—*Continued.*

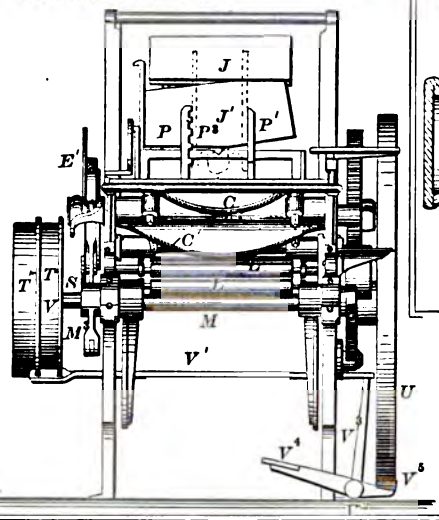

86067—Gray & Brittingham—*Piston & Steam Valve.*

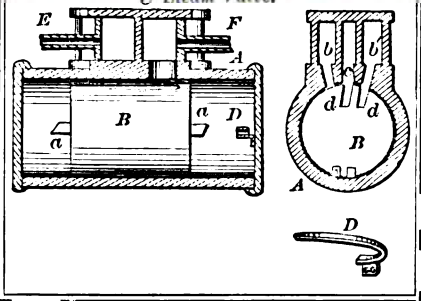

86066—T. Gladding—*Salt Trough for Cattle.*

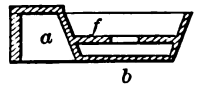

86072—E. Hosford—*Stove.*

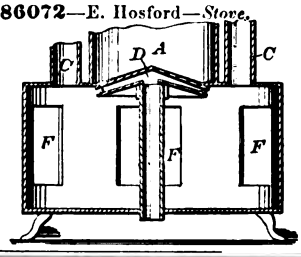

86071—C. C. Hiatt—*Force Pump.*

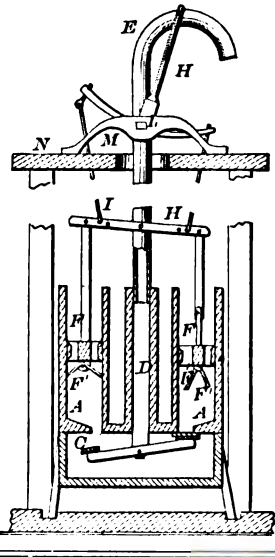

86065—W. Gilkey—*Steering Apparatus.*

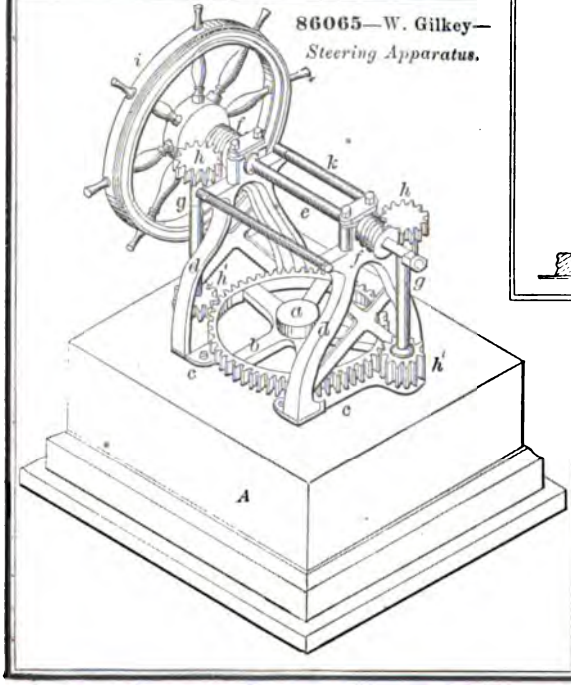

86069—Harwood & Newton—*Stove Grate.*

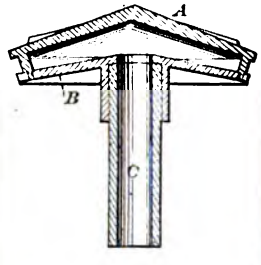

86068—D. W. Hamaker—*Seed and Grain Drill.*

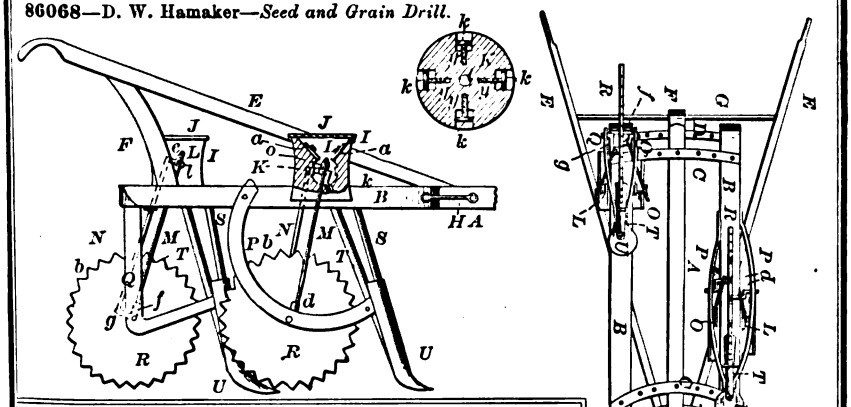

86070—Heupel, Reinhardt & Votteler—*Steam Engine Valve Gear.*

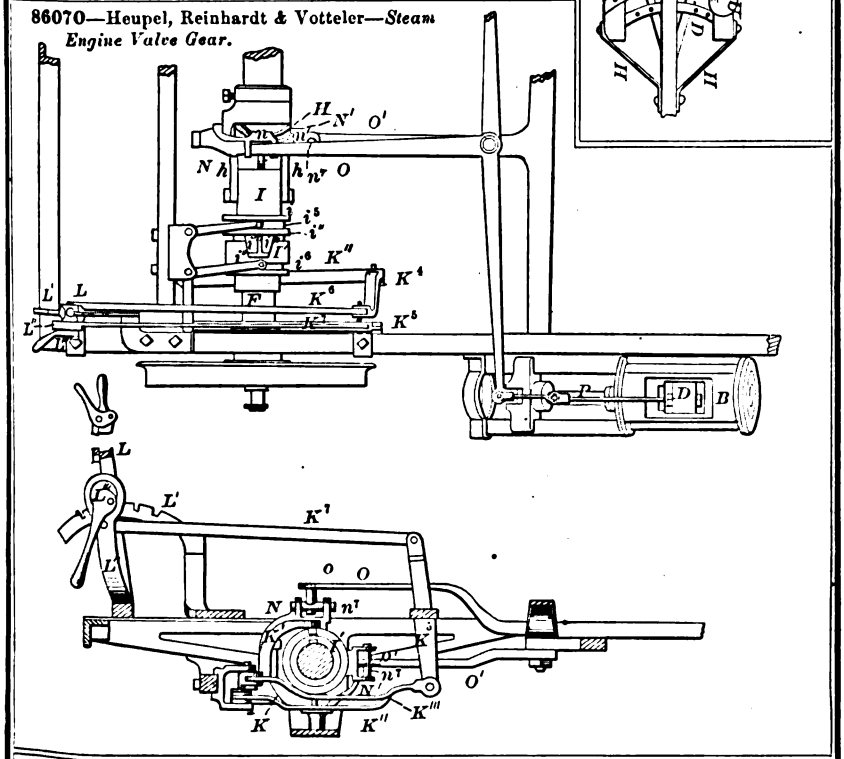

86073—E. Hosford—*Stove.*

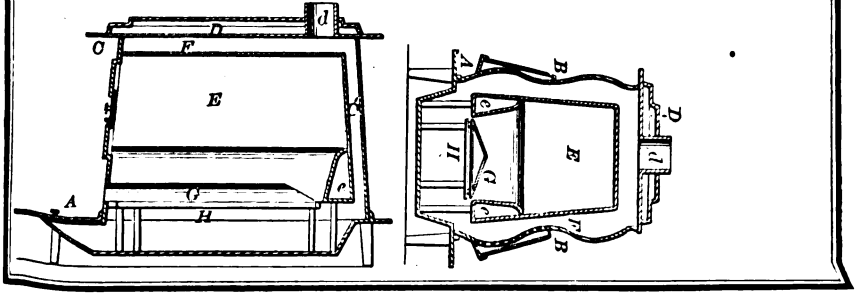

86074—C. D. Newton—*Bed Plate for Stoves.*

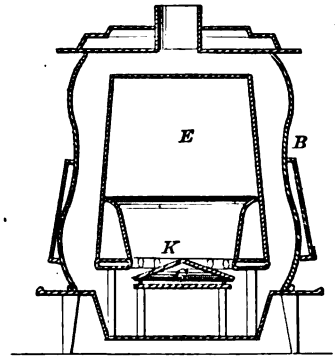

86075—C. E. Jacot—*Watch.*

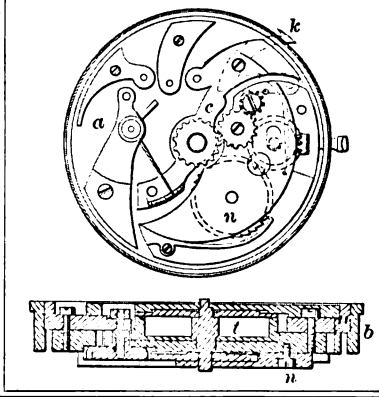

86076—E. T. Jenkins—*Hydrant.*

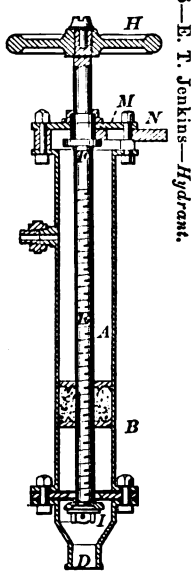

86077—C. C. Johnson—*Wheelbarrow.*

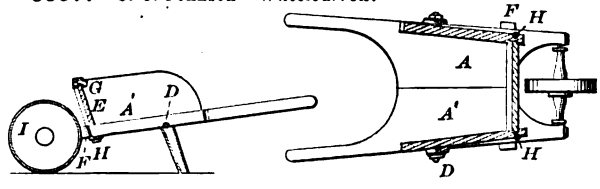

86079—J. H. & H. P. Jones—*Plow.*

Fig. 1

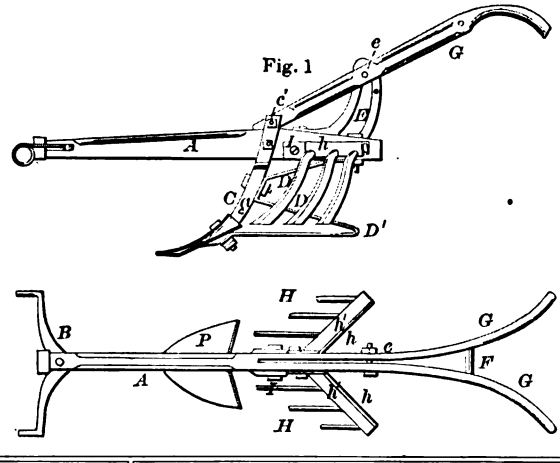

86078—D. L. & G. T. Jones—*For Burring Wool.*

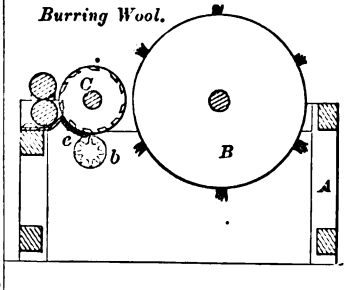

86080—W. S. Kincaid—*Horse Hay Rake.*

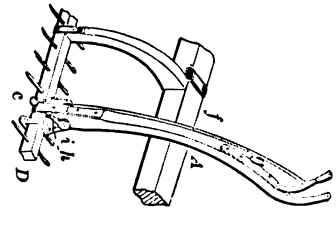

86081—J. M. Kirkpatrick—*Fence Builder.*

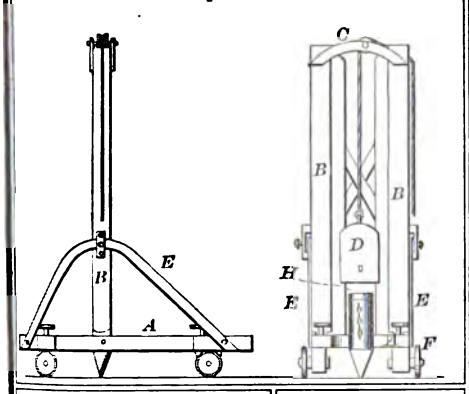

86083—Köhler & Wilson—*Churn.*

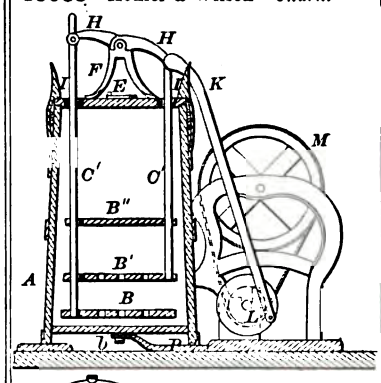

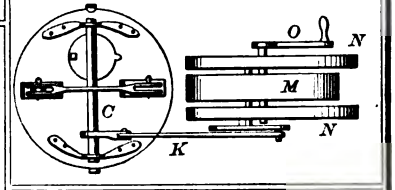

86084—C. Lanzendorfer—*Lamp Extinguisher.*

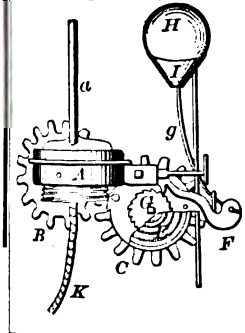

86082—F. Klee—*Fastening for Bottle Stoppers.*

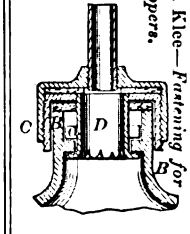

86085—T. Leffel—*Case for Turbine Water Wheels.*

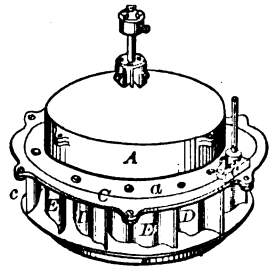

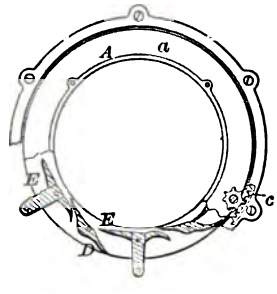

86086—A. C. Loud—*Propeller.*

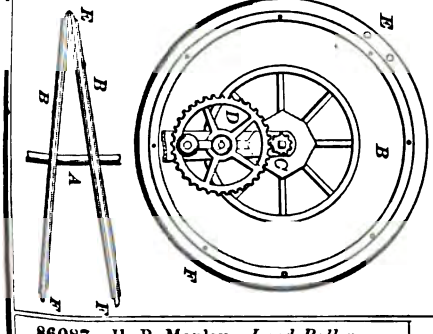

86087—H. P. Manley—*Land Roller.*

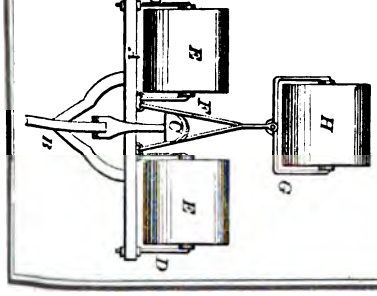

86088—C. Maray—*Galvanic Plate for Remedial Purposes*

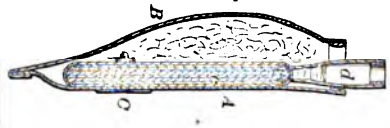

86089—J. L. Mason—*Fruit Jar.*

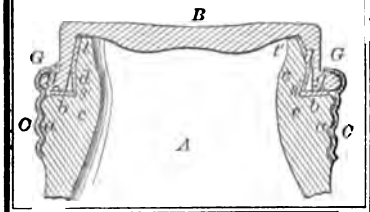

86091—L. A. Merriam—*Fire Arm.*

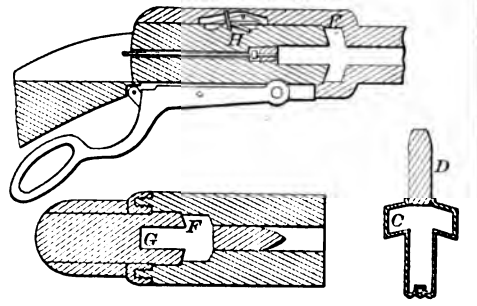

86093—J. H. Moore—*Railway Rail.*

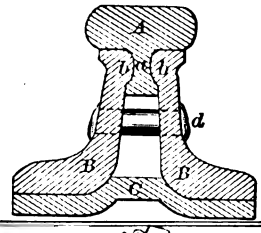

86092—W. T. Mersereau—*Stair Rod.*

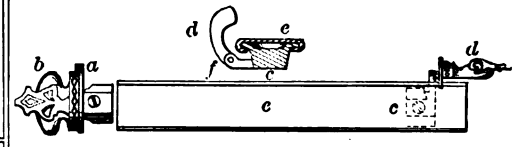

86096—C. A. Oehl—*Lozenge and Cracker Machine.*

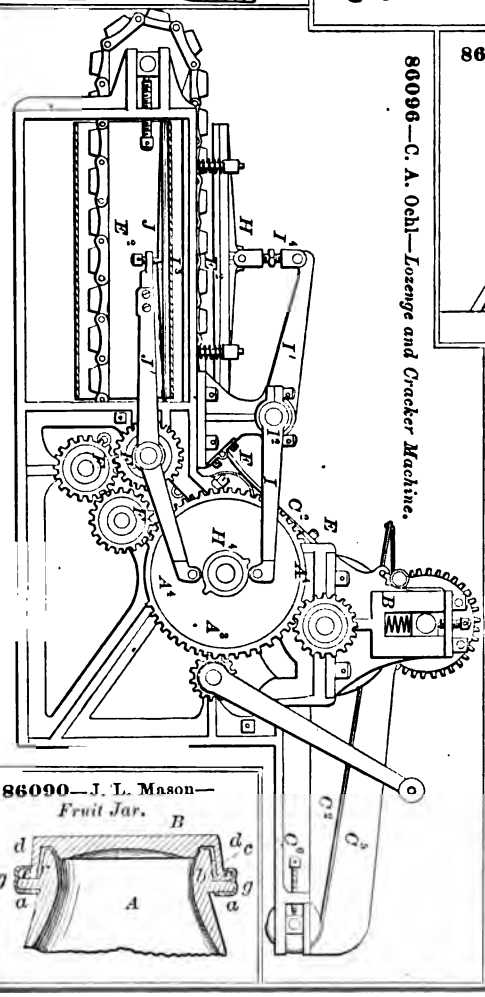

86095—C. R. Mumma—*Clothes Dryer.*

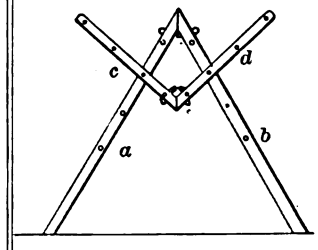

86094—Morter & Packer—*Churn.*

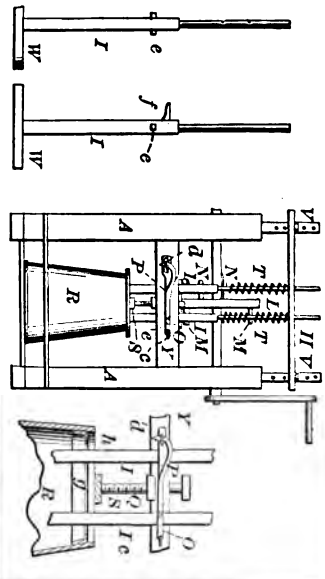

86090—J. L. Mason—*Fruit Jar.*

86097—J. Old—*Gum Scrubber.*

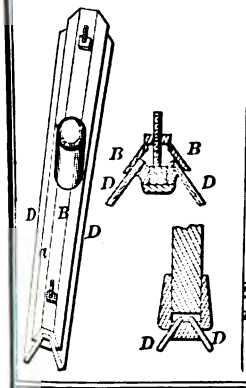

86099—J. F. Pool—*Fanning Mill.*

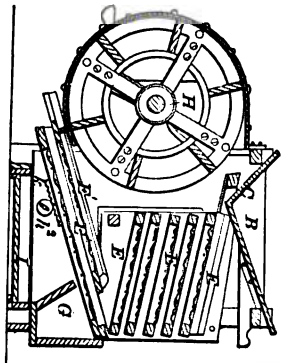

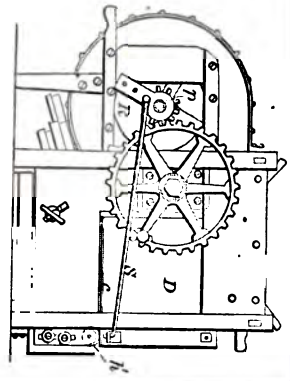

86098—W. F. Parker—*Mechanical Adjustment.*

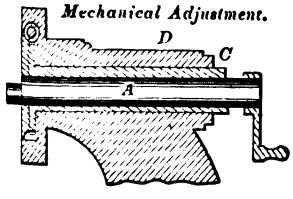

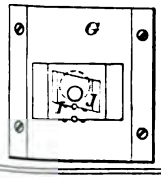

86100—S. S. Putnam—*Curtain Fixture.*

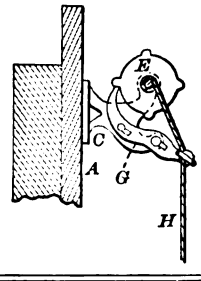

86103—J. Scoffern—*For Treating Paper and Woven Fabrics.*

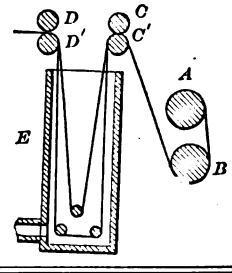

86102—A. Rothwell—*Stone Sawing Machine.*

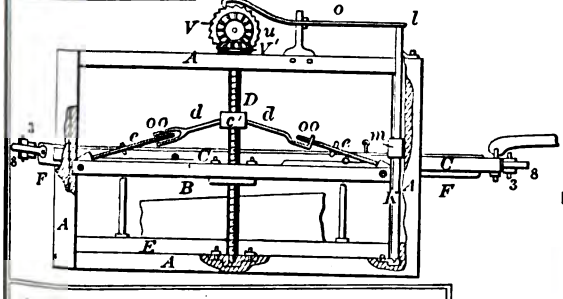

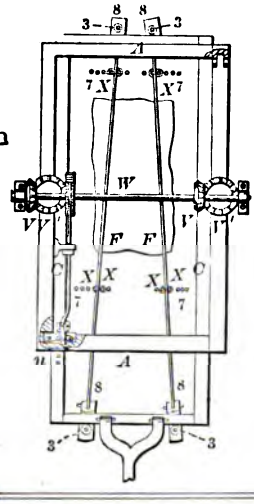

86105—W. Scott—*Corn Planter and Cultivator.*

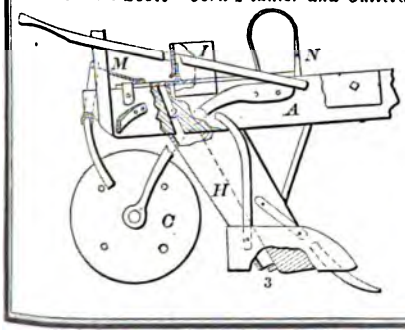

86101—J. Reckendorfer—*Lead Pencil.*

86107—W. O. Snyder—*Carriage Top Rest.*

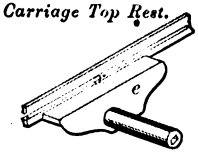

86108—S. Spoor—*Cooking Utensil.*

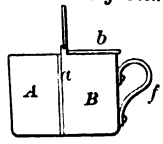

86109—P. H. Stauffer—*Hay Elevator and Manure Drag.*

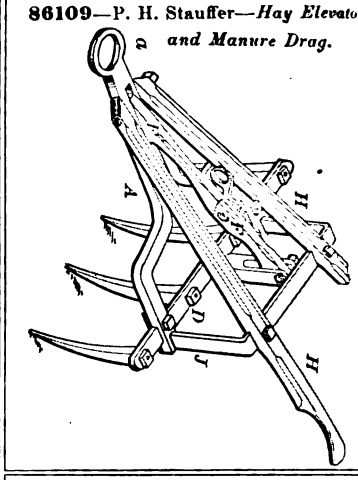

86111—Stevens & Denton—*Steam Pump.*

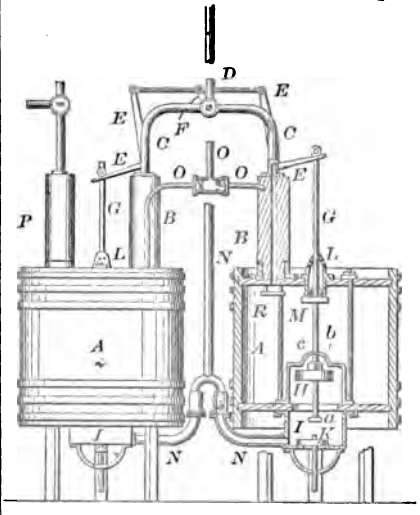

86110—P. H. Stauffer—*Hay Elevator and Manure Drag.*

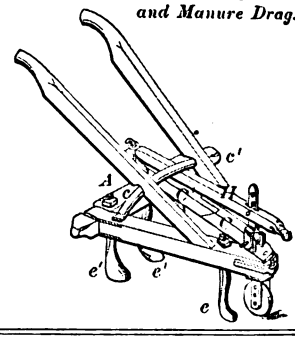

86113—B. D. Sutlief—*Table.*

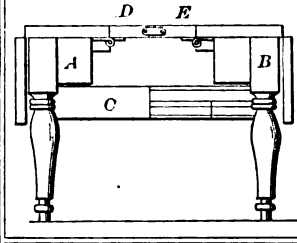

86114—A. Vang—*Key.*

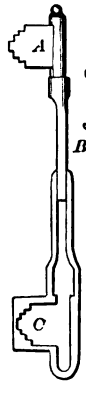

86118—W. H. Smith—*Lamp.*

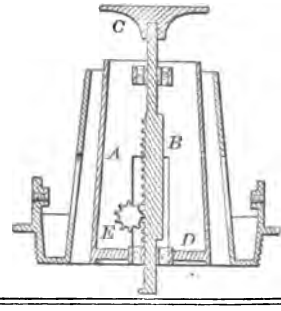

86112—R. C. Sturges—*Harness Saddle Pad.*

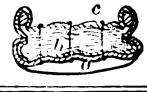

86116—O. D. Warner—*Alarm Lock*

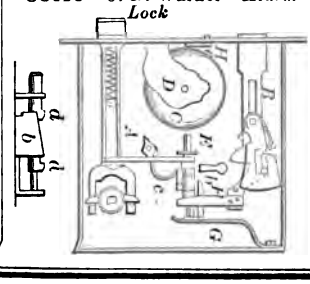

86115—B. P. Van Marter—*Tub for Distilling Essential Oils.*

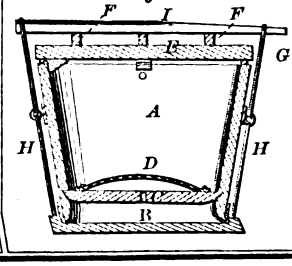

86117—G. R. Winkler—*Swing Bridge.*

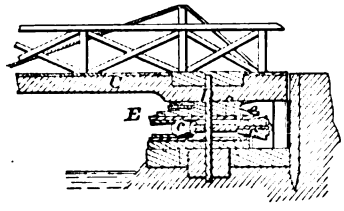

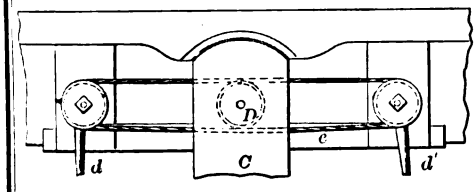

86119—W. Allport—*Cattle Tie.*

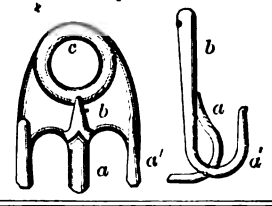

86120—J. H. Almond—*Spring Bed Bottom.*

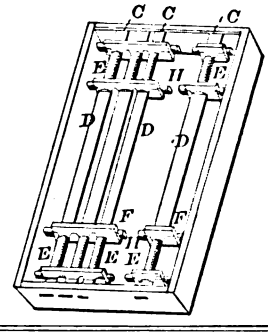

86121—B. Arnold—*For Mending Stockings.*

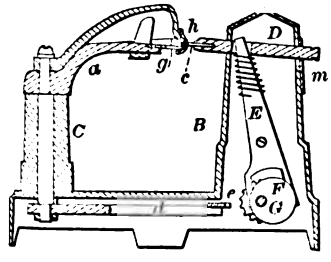

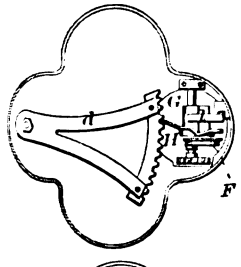

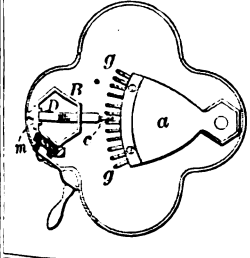

86123—J. Ashworth—*Splicing Belts.*

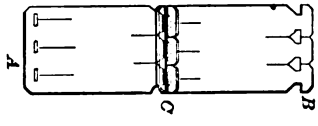

86122—B. Arnold—*For Mending Stockings.*

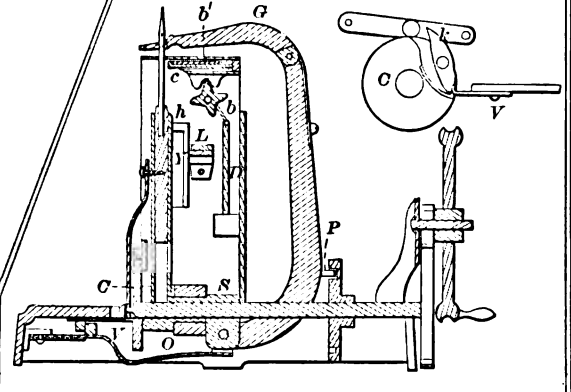

86124—Ballard & Killin—*Sash Lock.*

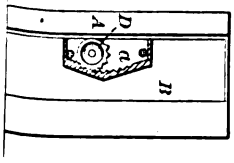

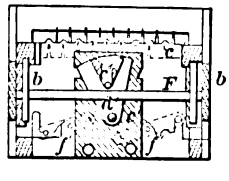

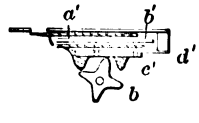

86125—E. S. Bennett—*Low Water Detector for Steam Boilers.*

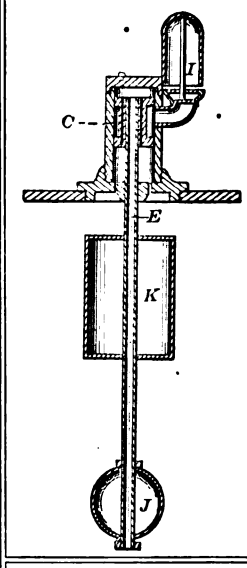

86126—E. S. Bennett—*Safety Valve.*

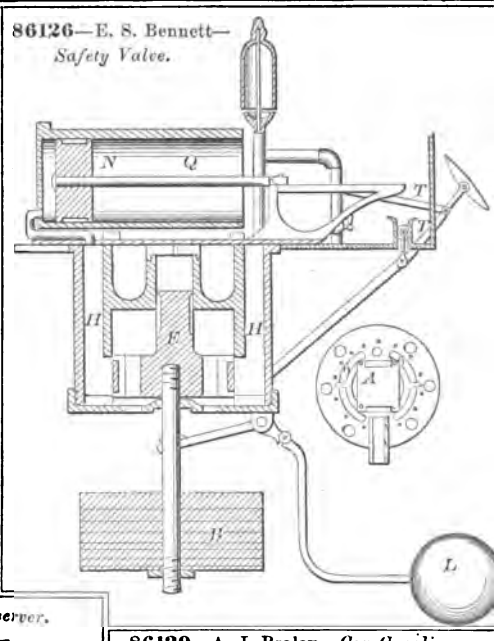

86127—E. S. Bennett—*Life Preserver.*

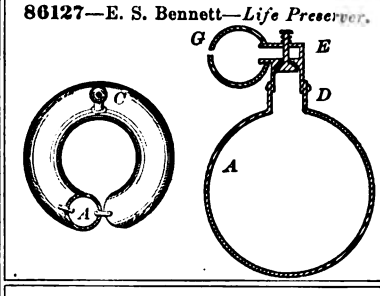

86128—W. Black—*Beehive.*

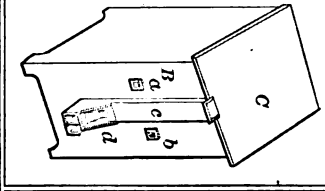

86129—A. J. Braley—*Car Coupling.*

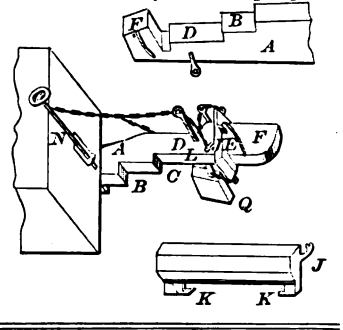

86130—B. Butler—*Axe Handle Shield.*

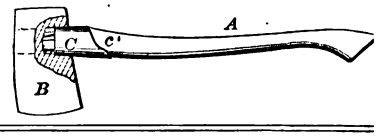

86131—C. H. Butterfield—*Sleigh Shaft.*

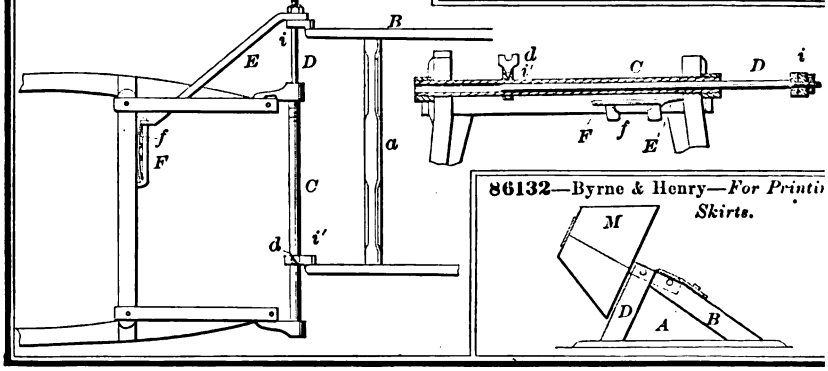

86132—Byrne & Henry—*For Printi*
Skirts.

86133—V. Calkins—*Farm Fence.*

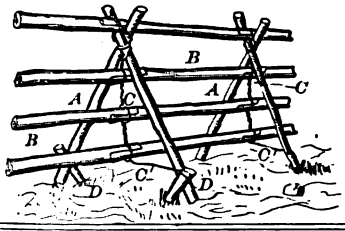

86134—C. T. Chester—*Galvanic Battery.*

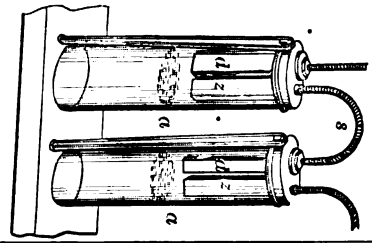

86136—J. Cobleigh—*Saw Mill Dog.*

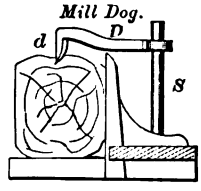

86138—R. A. Copeland—*Pipe Wrench and Cutter.*

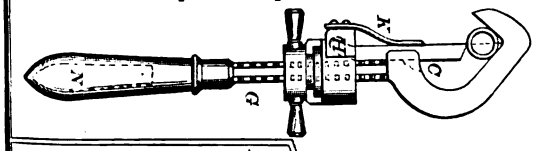

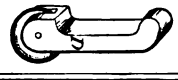

86135—A. Clark—*For Attaching Teeth to Dental Plates.*

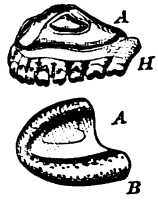

86137—E. A. Cooper—*Hames Fastener.*

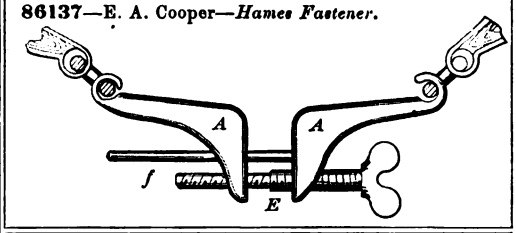

86139—S. Crowell—*Clothes Line Stretcher.*

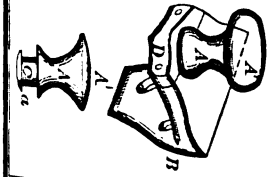

86140—J. Danner—*Clothes Frame.*

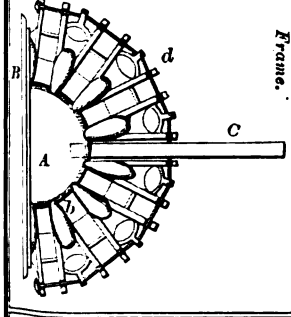

86141—B. M. Darling—*Seat for Chairs and Cars.*

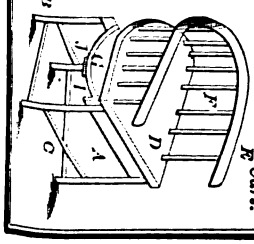

86143—S. Elder—*For Trimming Wall Paper.*

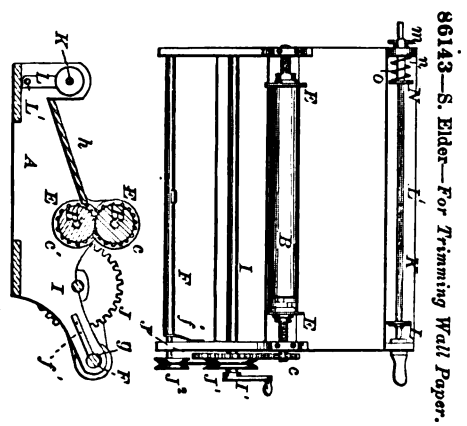

86144—Farrar & Whiting—*Flask for Moulding Pipe.*

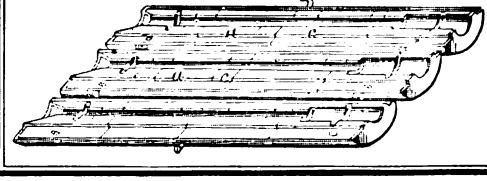

86146—T. Fowler—*For Expelling Water from Cloth.*

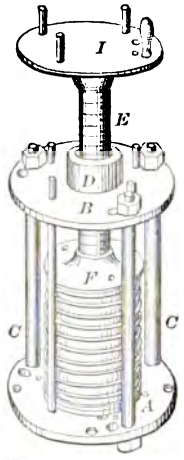

86147—J. Gibson, Jr.—*Stove Leg.*

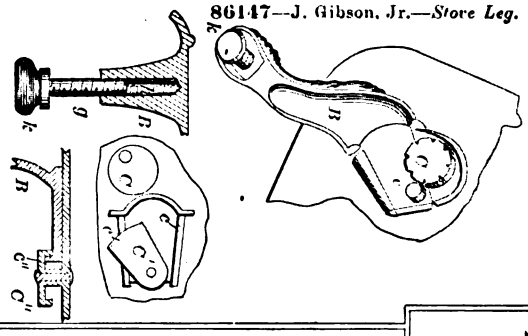

86148—G. D. Goodrich—*Clay Machinery.*

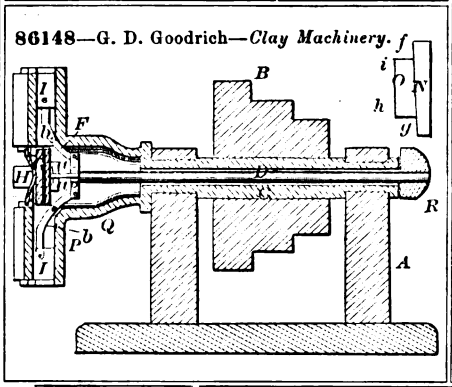

86149—C. Graham—*Trace Fastening.*

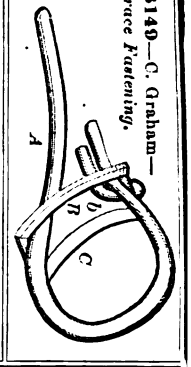

86152—J. T. Hancock—*Boiler Injector.*

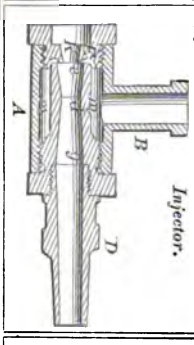

86154—M. Hiltz—*Fish Hook.*

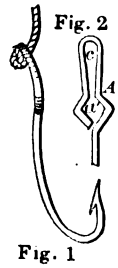

86150—L. Grim—*Carriage Coupling.*

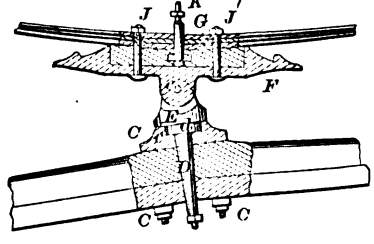

86155—J. E. Hobbs—*Gasometer.*

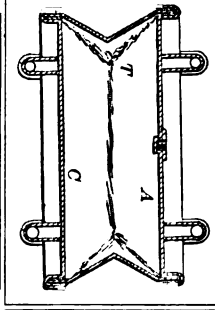

86151—Hamilton & Stevens—*Constructing Lightning Rods.*

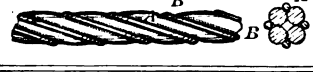

86153—J. E. Hawkins—*Velocipede.*

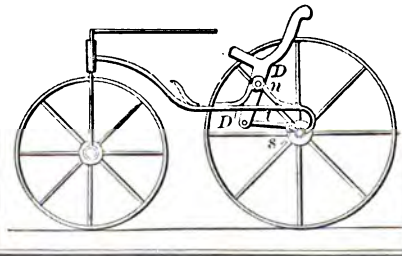

86157—J. H. Hollingsworth—*Fruit Box.*

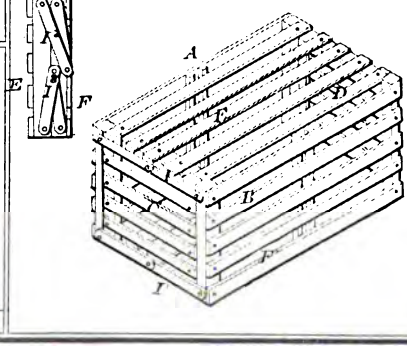

86156—Holcroft, Pearson & Shore—*Self-Acting Spinning Machine.*

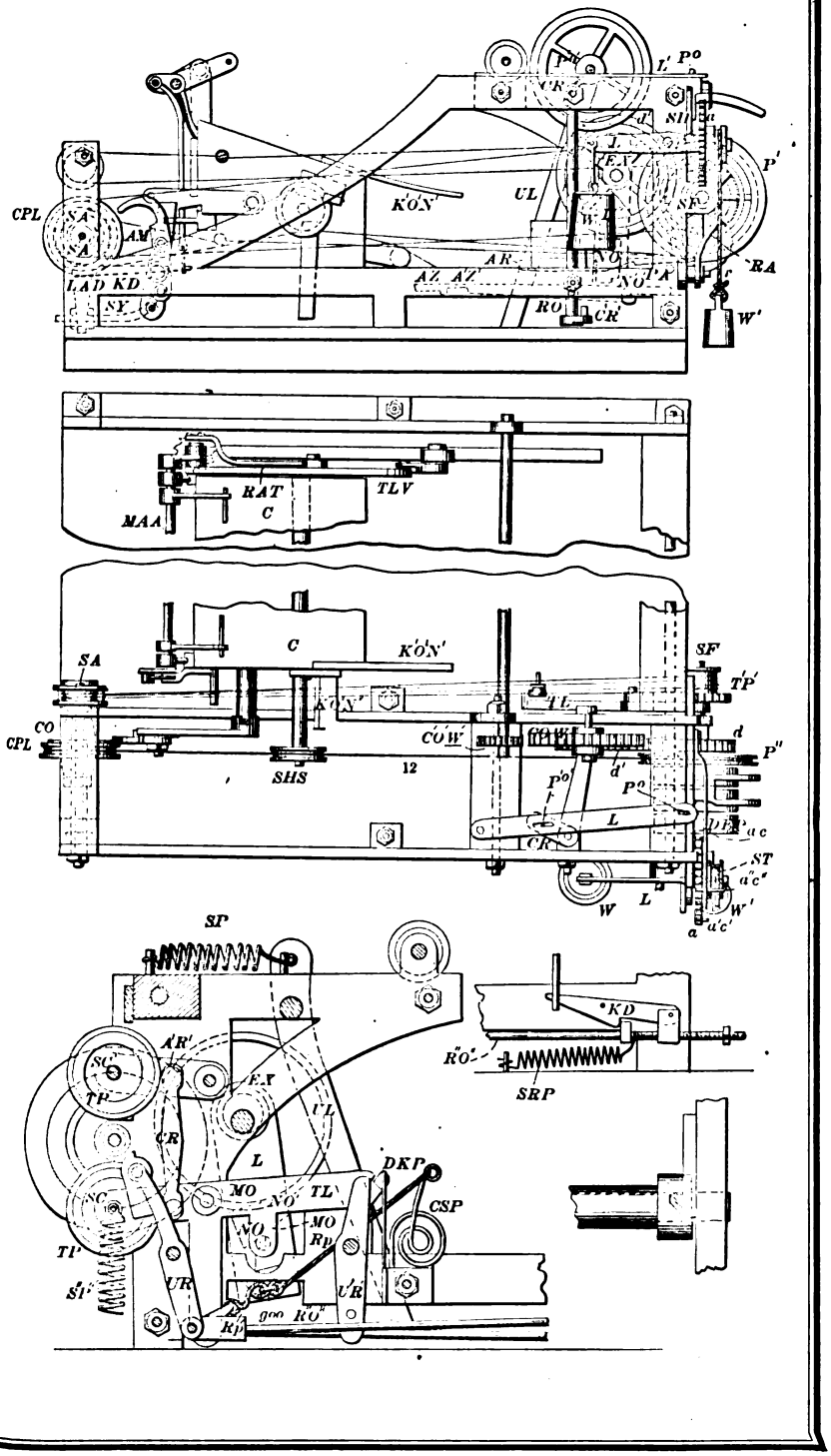

86158—H. Houston—*Nozzle Filter.*

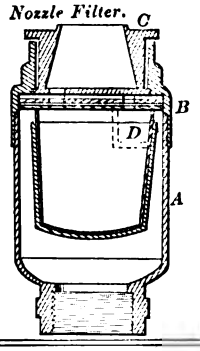

86159—C. H. Hudson—*Folding Tub.*

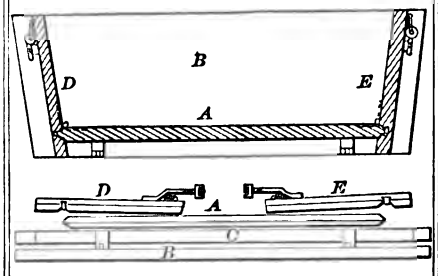

86161—Hurd & Ardinger—*Car Coupling.*

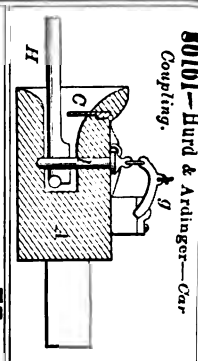

86160—J. Huff—*Cultivator.*

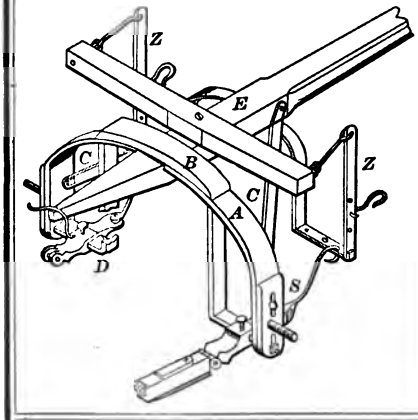

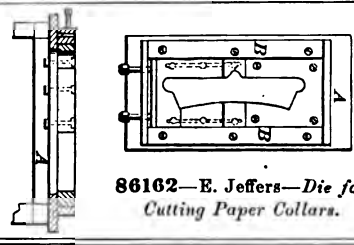

86162—E. Jeffers—*Die for Cutting Paper Collars.*

86165—L. P. Keach—*Boot Jack and Blacking Cabinet.*

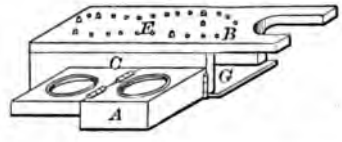

86163—J. T. Jones—*Sewing Machine.*

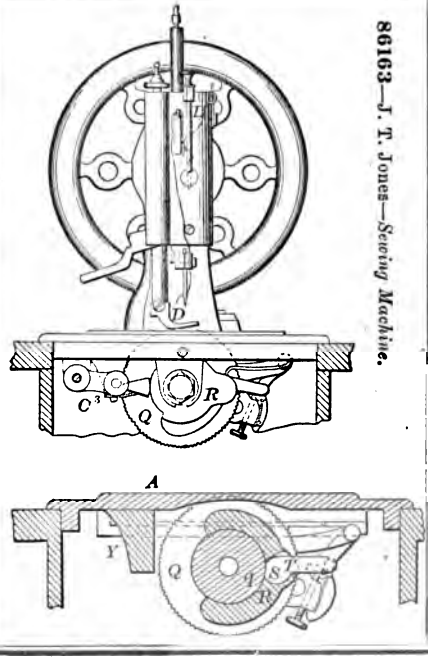

86166—D. Kirk—*For Clinching Horse Shoe Nails.*

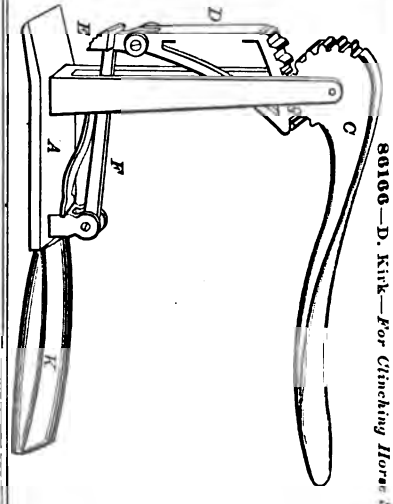

86164—J. T. Jones—*Sewing Machine.*

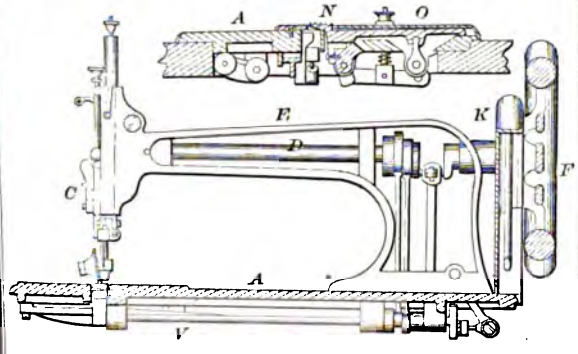

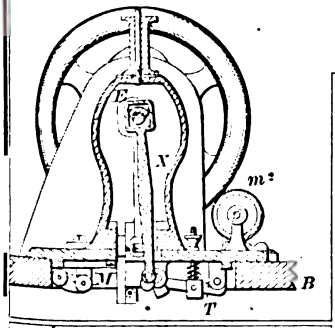

86168—W. H. Low—*Steam Safety Valve*

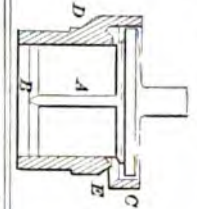

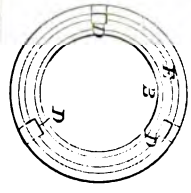

86167—La Rue & Audet—*For Separating Magnetic from Non-Magnetic Substances.*

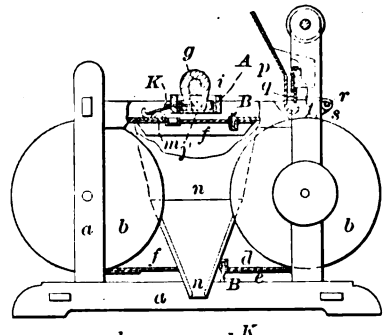

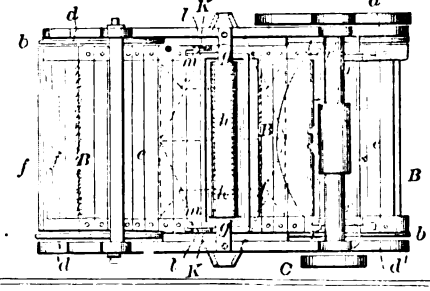

86169—D. Manuel—*Spring Bed Bottom*

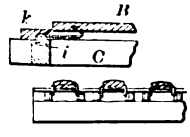

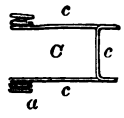

86170—T. J. Martin—*Cultivator.*

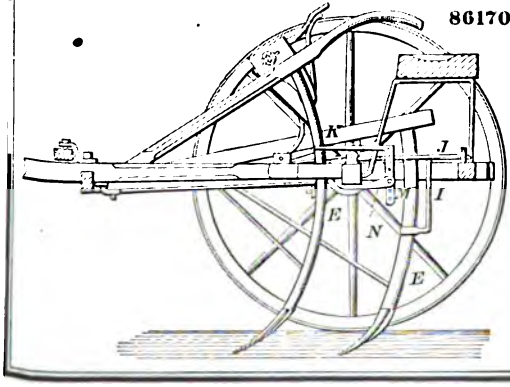

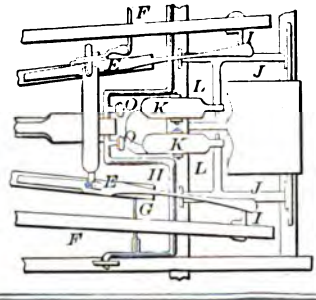

86171—T. J. Mayall—

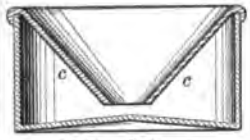

Rubber Spittoon.

86173—E. Maynard—
Ball and Socket Joint.

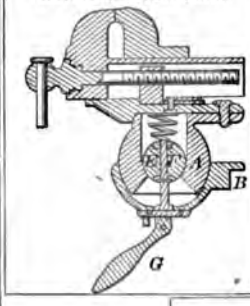

86174—McCullon & Woodcock—
Lubricator.

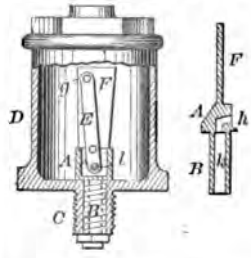

86175—Merritt & Gibbs—
Animal Trap.

86180—C. W. Saladee—*Collar.*

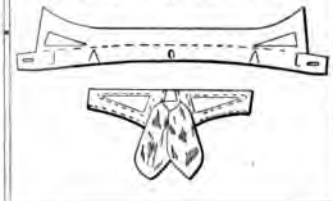

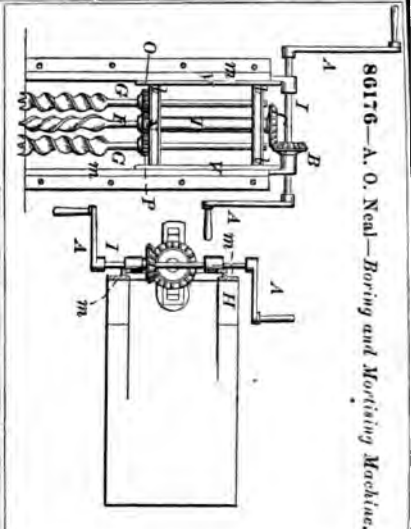

86176—A. O. Neal—*Boring and Mortising Machine.*

86177—D. W. Niles—*Writing Slate.*

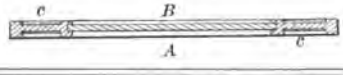

86178—H. F. Phillips—*Harvester Rake.*

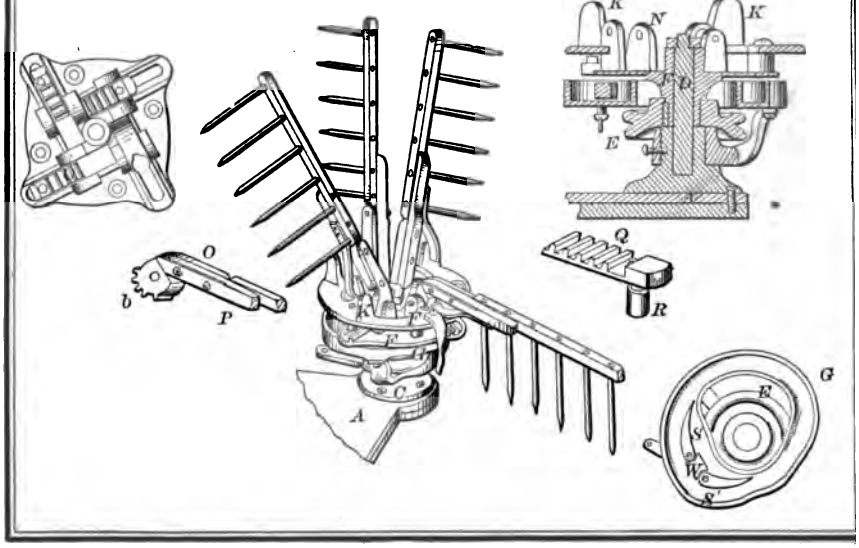

86179—T. I. Powell—*Hay Elevator and Conveyer.*

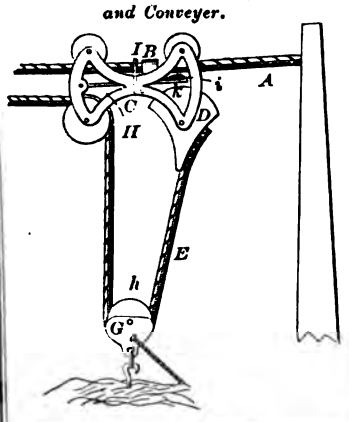

86181—P. A. Samuel—*Wrench.*

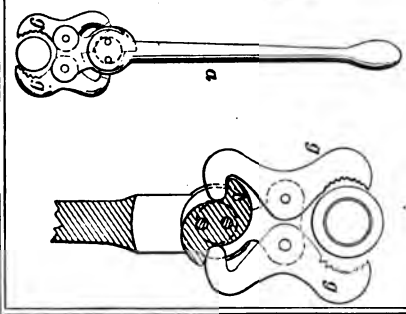

86182—F. I. Seymour—*For Spinning Tapering Tubes of Sheet Metal.*

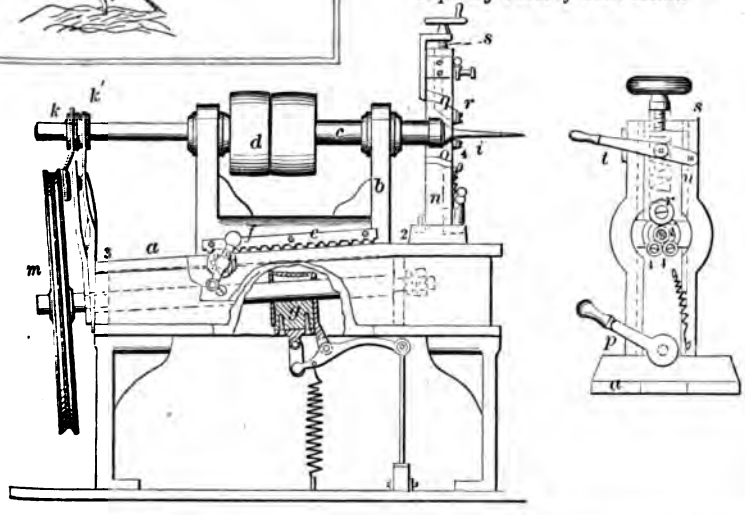

86183—H. N. Sherman—*Corset Fastening.*

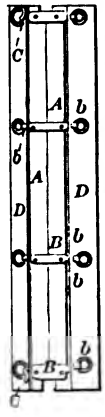

86184—G. Smith—*Farm Gate.*

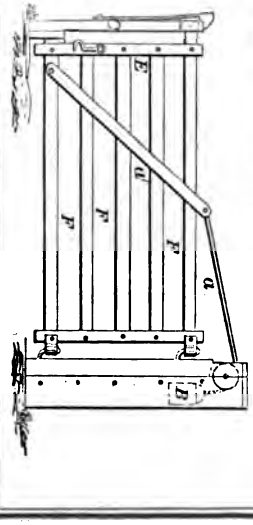

86185—J. S. Smith—*Cultivator for Dirting Cotton.*

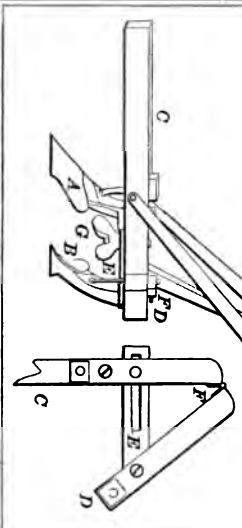

86186—H. F. Snyder—*Hanger for Shafting.*

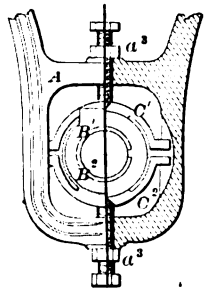

86187—L. Stevens—*For Illuminating Gas Manufacture.*

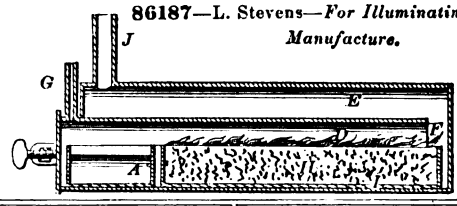

86188—A. Strever—*Hames Hook and Clevis.*

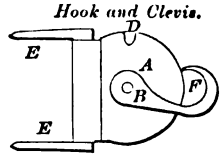

86189—T. J. Sullivan—*Safe.*

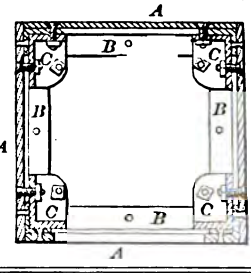

86190—Terbune & Romaine—*Potato Plow.*

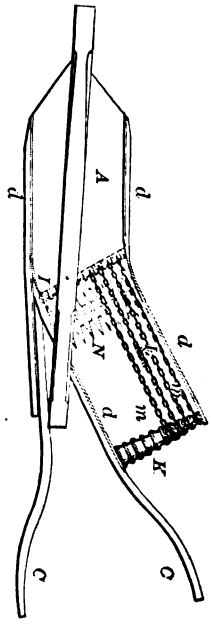

86191—R. M. Thompson—*Sash Holder.*

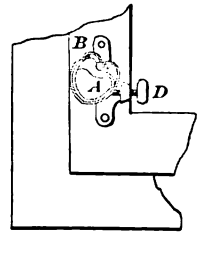

86192—H. Walker—*Grain Dryer.*

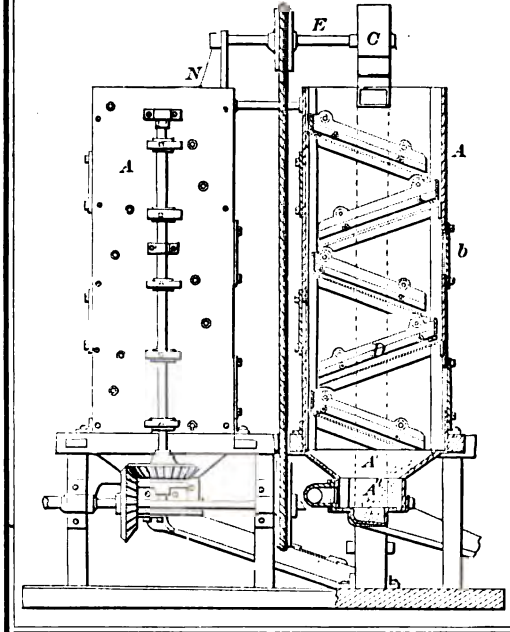

86193—J. W. Weston—*Float for Life Preservers.*

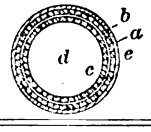

86195—Windell & Dorst—*Steam Whistle Drain Valve Device.*

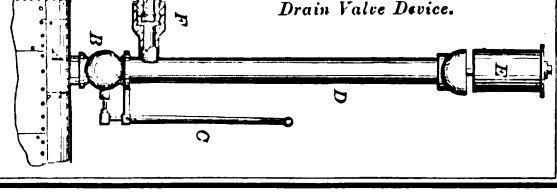

86194—J. E. Wheat—*Grain Cleaner.*

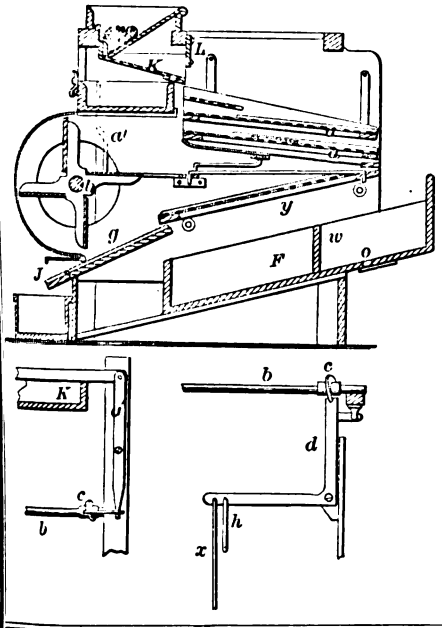

86196—Windell & Dorst—*Plug for Barrels.*

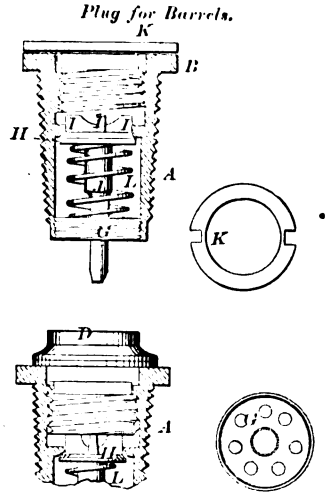

86198—C. M. Young—*Vapor Heater.*

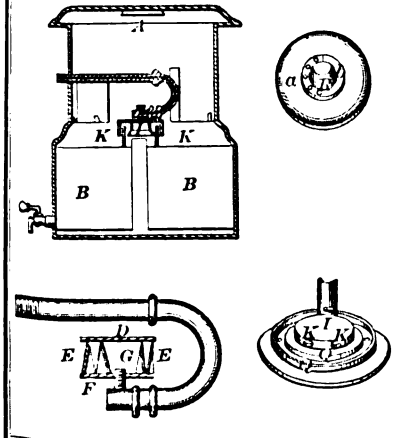

86199—J. W. Ardinger—*Grain Feeding and Scouring Apparatus.*

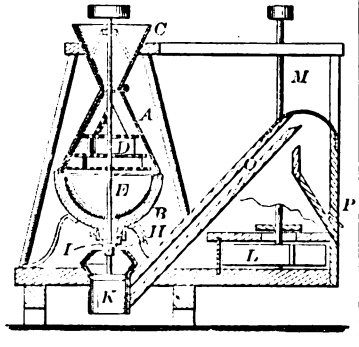

86197—A. & G. F. Wright—*Endless Chain for Horse Power.*

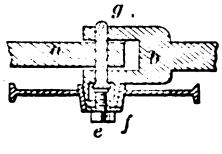

86204—J. R. Blake—*Truss*

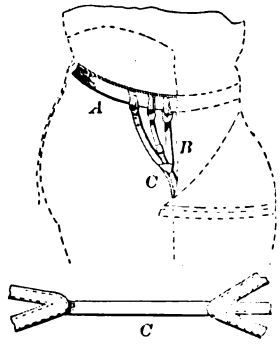

86203—M. & W. P. Bales—*Corn Harvester.*

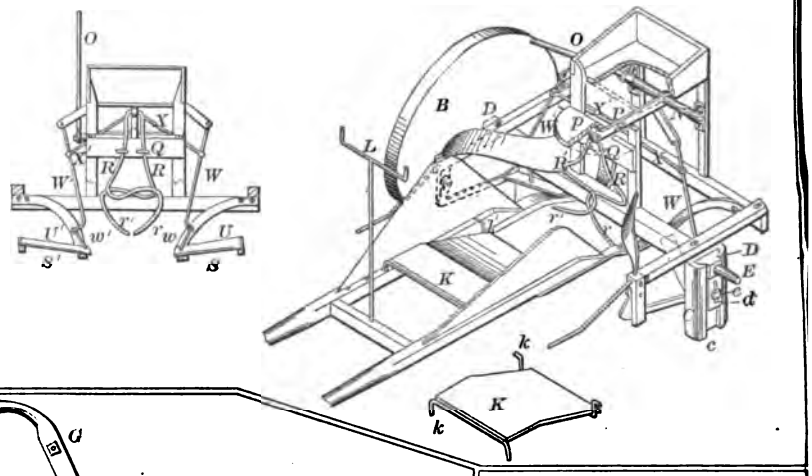

86205—W. R. Blanchard—*Cultivator.*

86206—C. F. Brown—*Anchor.*

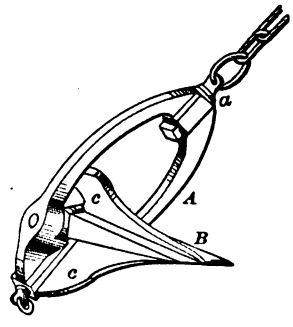

86207—T. J. Brown—*Stump Extractor.*

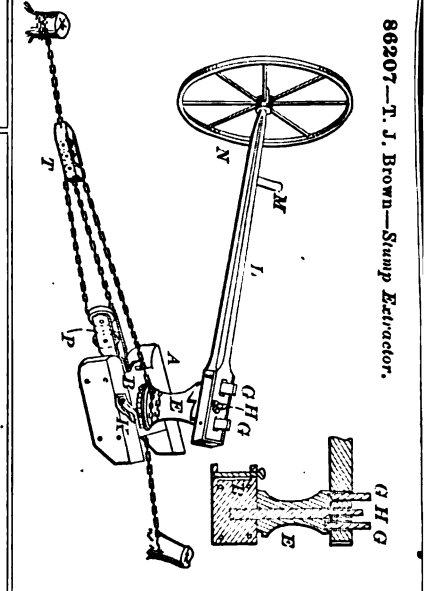

86208—J. R. Bullis—*Jointer for Circular Saws.*

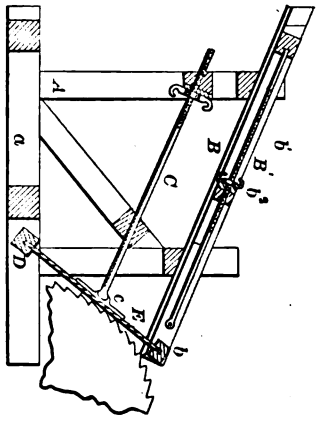

86209—T. & J. H. Burdick—*Mortising Tool.*

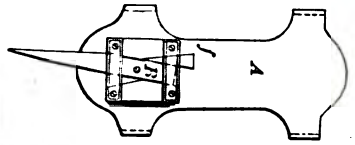

86213—J. F. Collins—*Pump.*

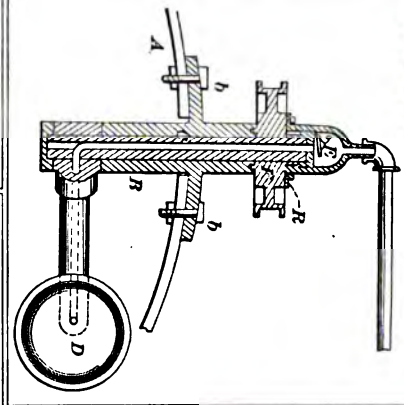

86211—Cleveland & Bassett—*Carding Engine.*

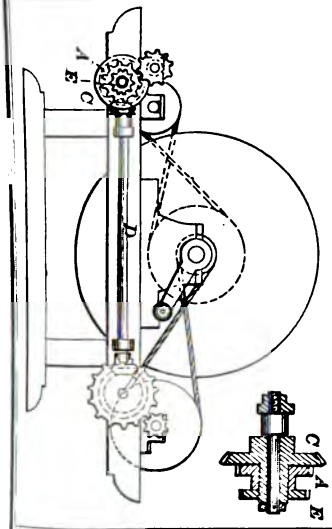

86212—J. L. Cole—*Coupling.*

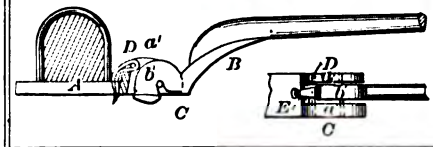

86210—J. H. & J. B. Clark—*Steam Heater.*

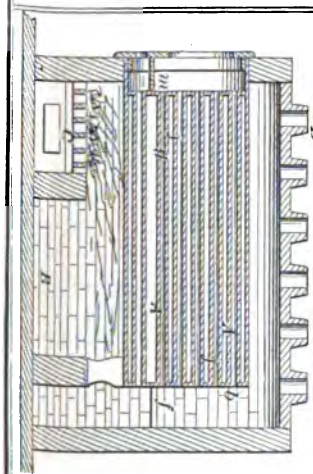

86215—M. Coryell—*Hop Press.*

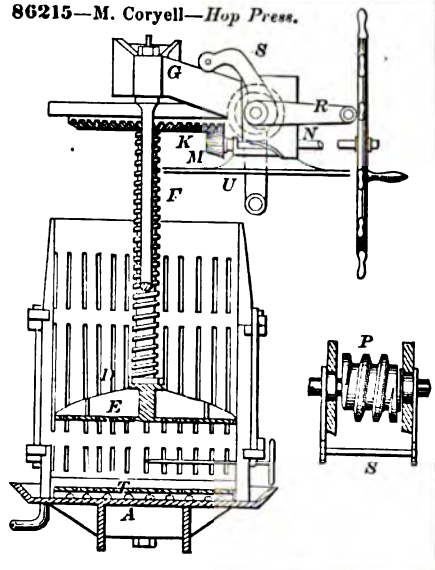

86216—J. C. & T. Couldrey—*Pump Valve.*

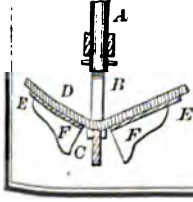

86214—I. H. Congdon—*Cross Head for Steam Engines.*

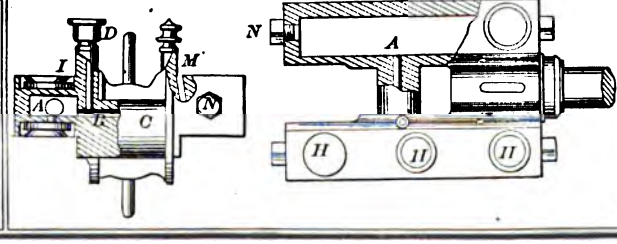

86217—G. W. Davis—*Keeper for Door Bolts.*

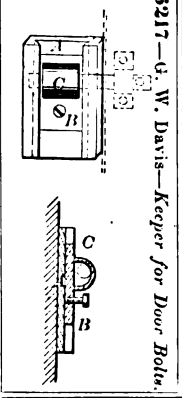

86224—T. Hay—*Globe Holder.*

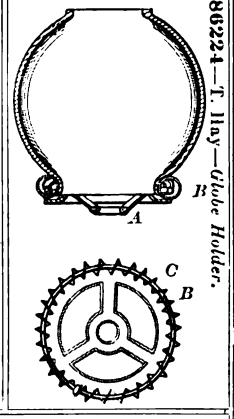

86221—J. J. Geiger—*Voltaic Pile.*

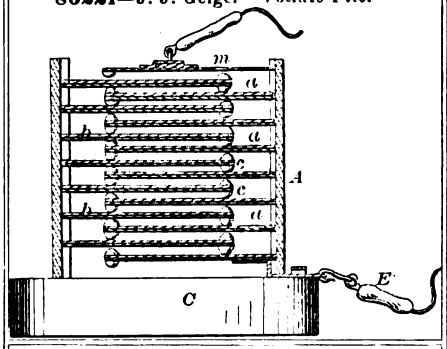

86219—C. Fogelberg—*Melody for Keyboard Instruments.*

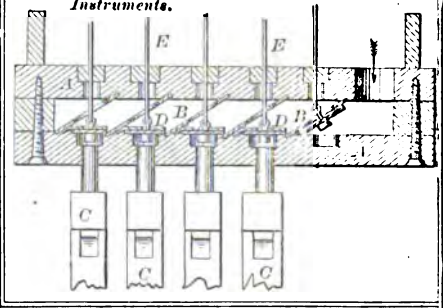

86222—P. E. & J. P. Gruger—*Wash Stand.*

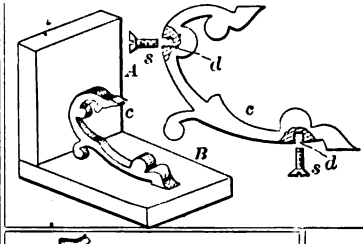

86220—P. Frost—*Malleable Cast Iron Bolt.*

86225—J. Hayden, Jr.—*Faucet.*

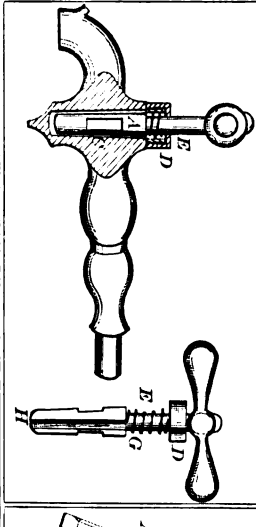

86223—R. Hamilton—*Road Scraper.*

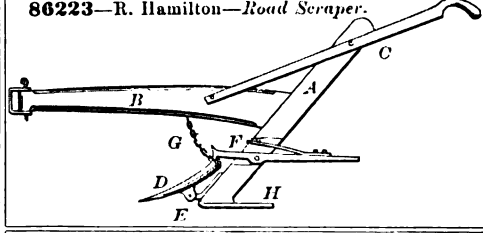

86226—A. Hearst—*Corn Planter.*

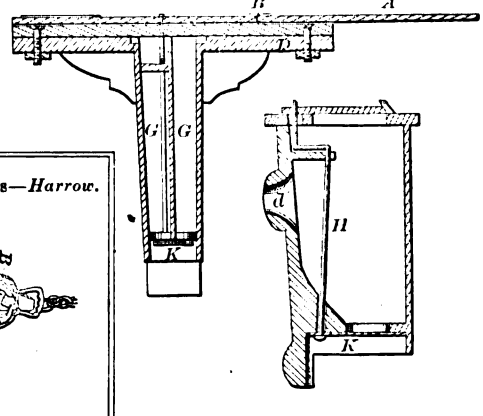

86218—T. H. Eulass—*Harrow.*

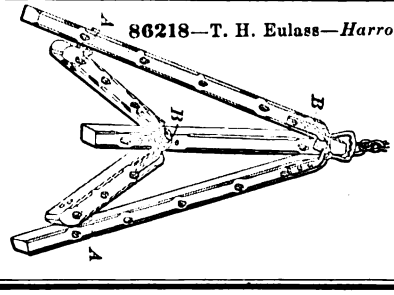

86228—L. Hillebrand—*Door Spring.*

86227—G. P. Herthel, Jr.—*Truss Bridge.*

86230—W. R. Hunter—*Car Axle Box.*

86231—Isaacs & Banner—*Plow.*

86232—C. M. James—*For Distilling Volatile Hydro-Carbons.*

86234—A. W. Lake—*Fermenting Ale.*

86236—M. R. Lenman—*Washing Machine.*

86229—A. P. Hopkins—*Plow and Scraper.*

86233—L. Kittinger—*Loom for Weaving Wire Cloth.*

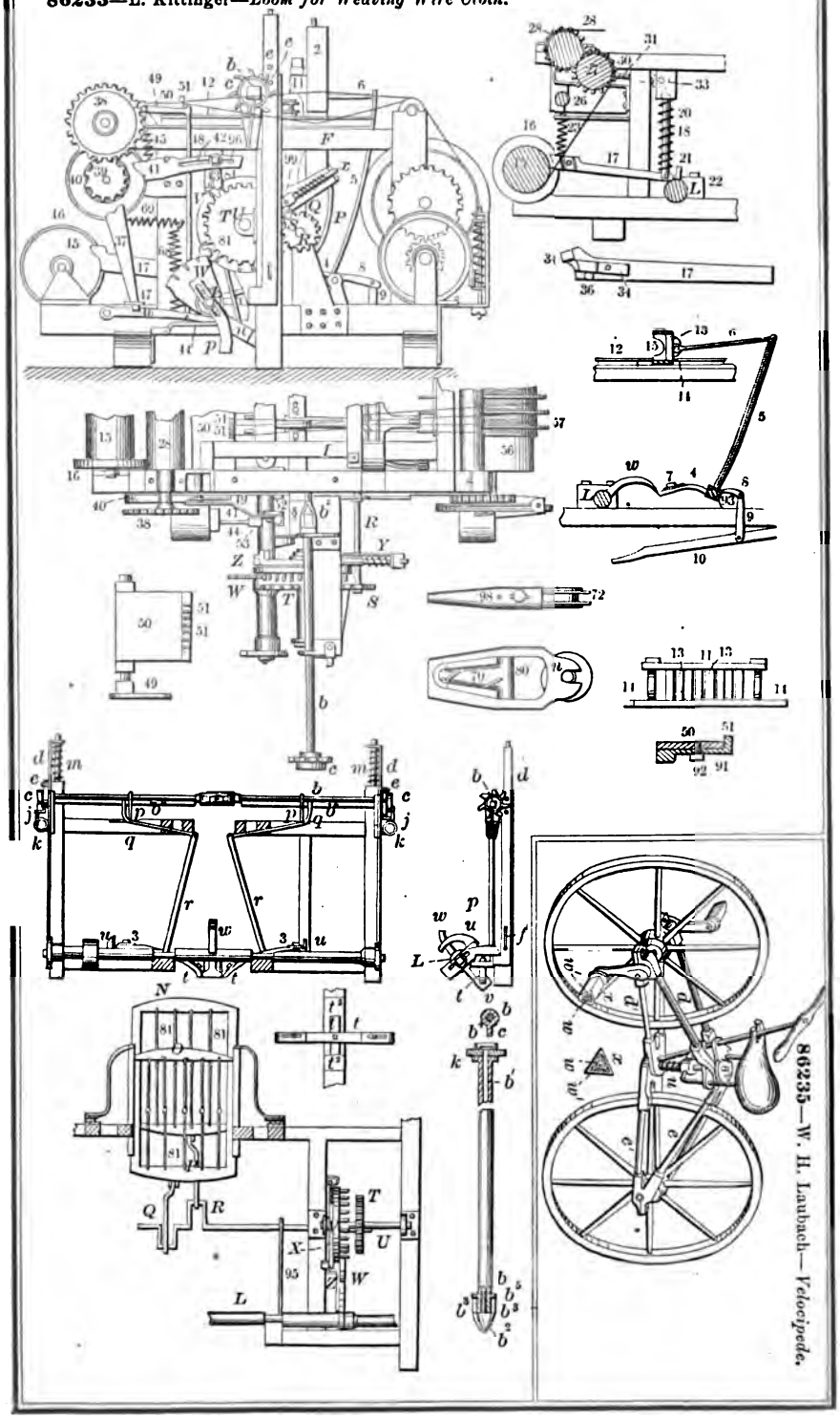

86235—W. H. Laubach—*Velocipede.*

86239—J. Martin—*Hot Air Furnace.*

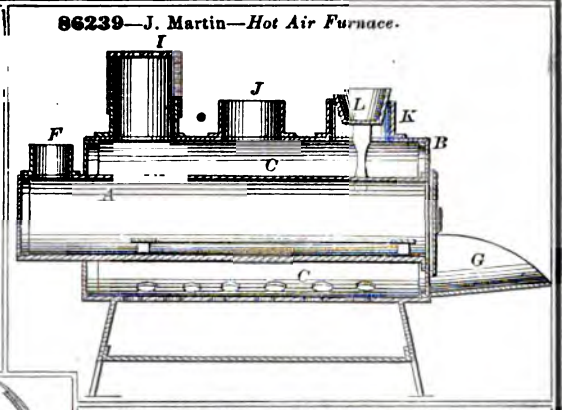

86237—J. A. Livingston—*Transferring Device.*

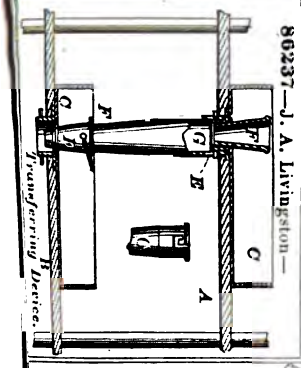

86238—J. Martin—*Water Wheel.*

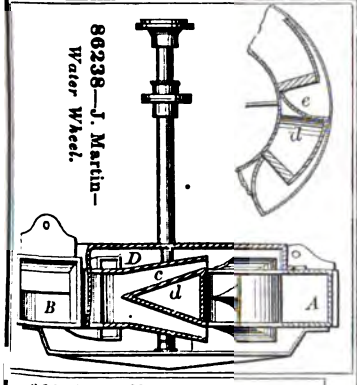

86240—G. W. & W. H. Metcalf—*Fire Board.*

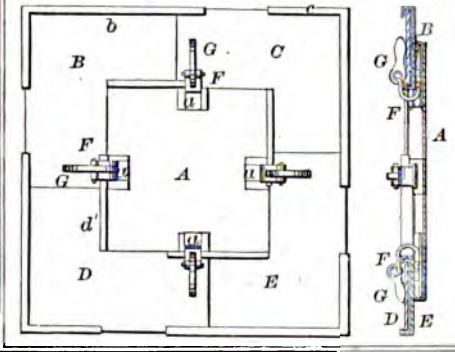

86243—A. Newkumet—*Moulding Crucibles.*

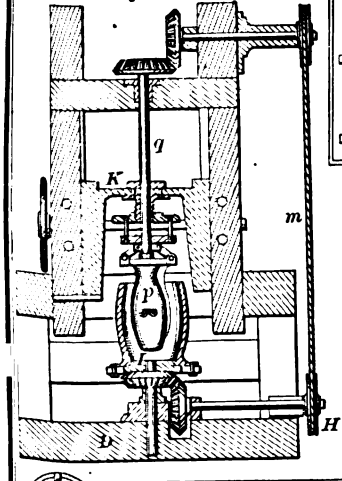

86241—J. H. Nale—*Wagon Seat.*

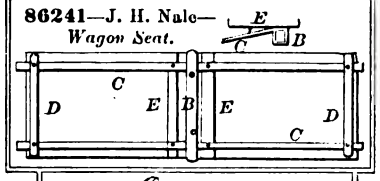

86245—Osborn & Walsen—*Stubble Attachment for Plows.*

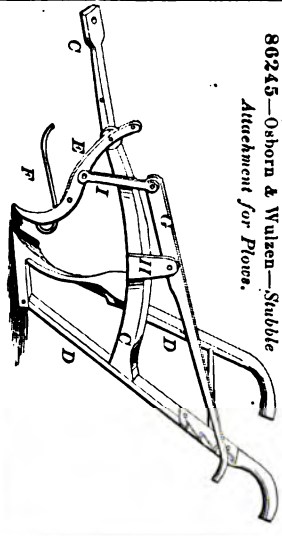

86242—A. Newcomb—*Door Bolt and Weather Strip.*

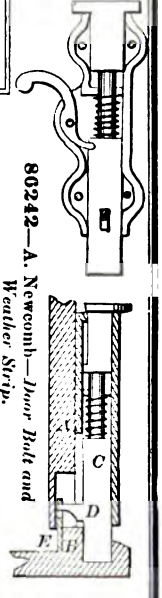

86244—J. W. Norcross—*Row Lock.*

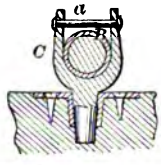

86246—H. Pennie—*Alarm Tank for Refrigerators.*

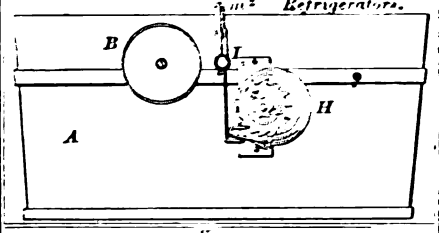

86249—J. H Rae—*Ore Washer and Separator.*

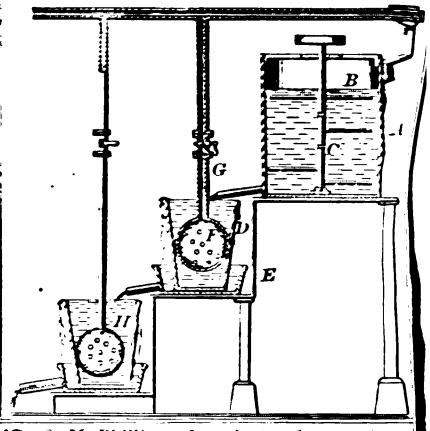

86248—O. M. Phillips—*Manufacture of Oxygen Gas.*

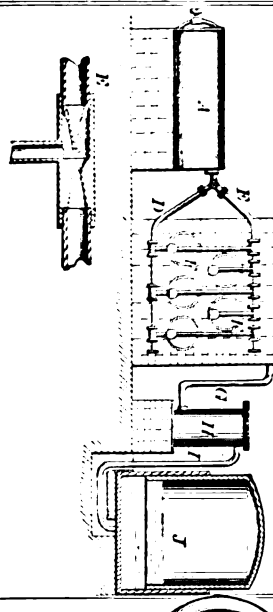

86247—O. M. Phillips—*Introducing Oxygen Gas into Furnaces, Retorts, &c.*

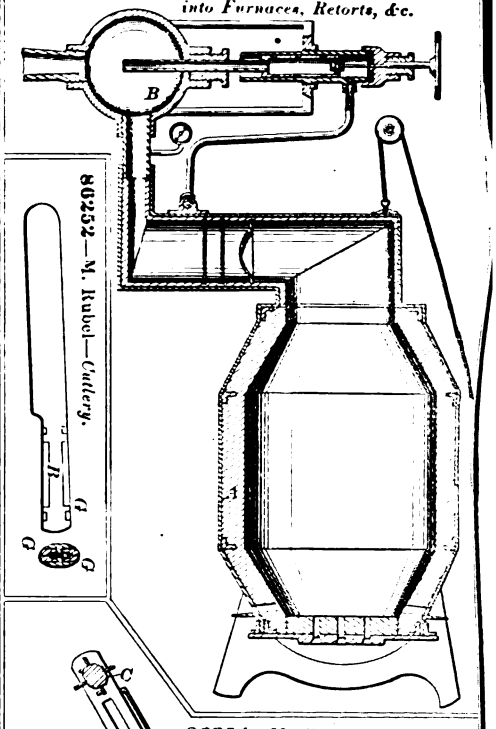

86252—M. Rubel—*Cutlery.*

86250—J. Ringen—*Washing Machine.*

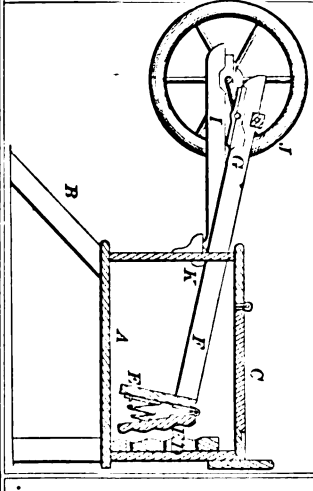

86253—C. Ruckert—*Carpet Stretcher.*

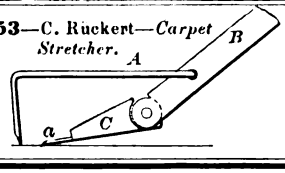

86254—M. Simpkins—*Quilting Frame and Clothes Dryer.*

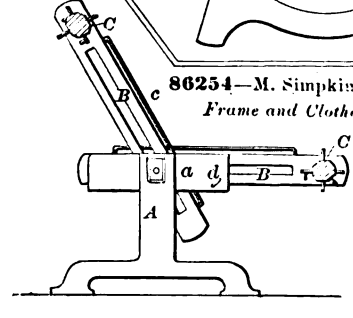

86251—D. T. Robinson—*Velocipede.*

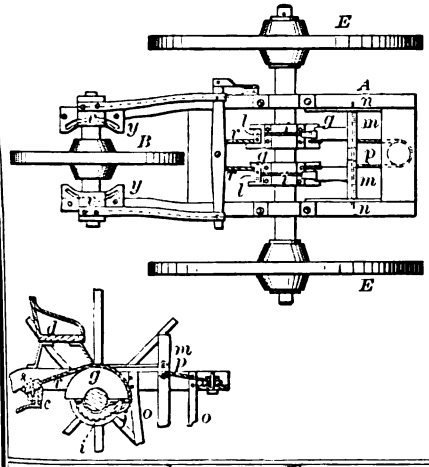

86256—J. Taylor—*For Washing and Scouring Sand.*

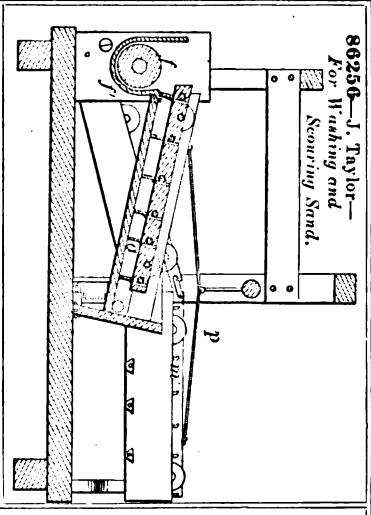

86258—N. Thorn—*Paddle Wheel.*

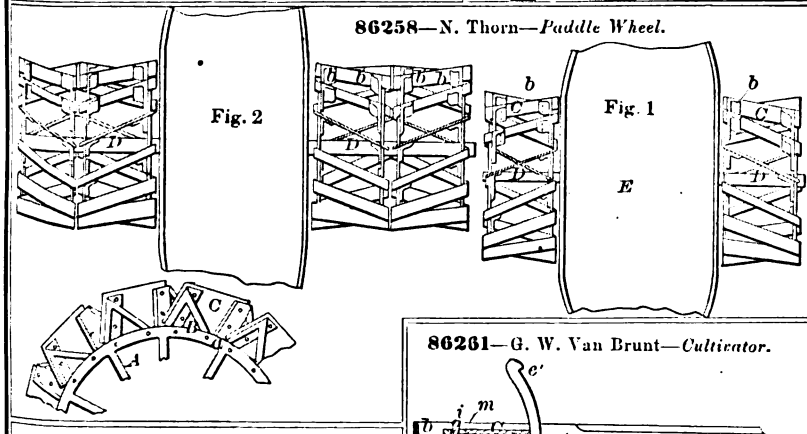

86261—G. W. Van Brunt—*Cultivator.*

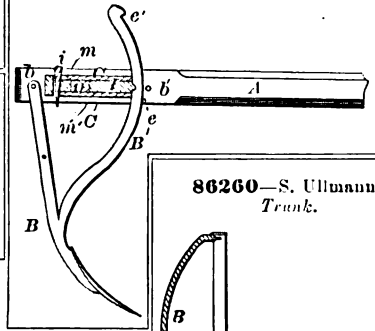

86257—R. W. Thing—*Composing Stick.*

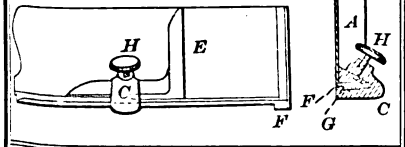

86260—S. Ullmann—*Trunk.*

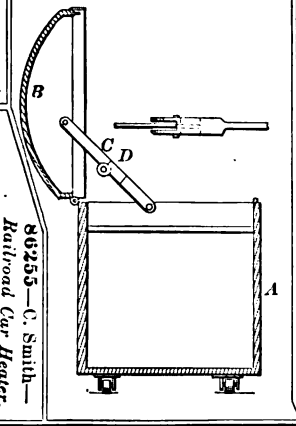

86263—C. Wells—*Printing Press.*

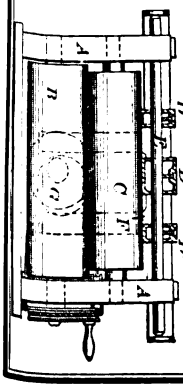

86255—C. Smith—*Railroad Car Heater.*

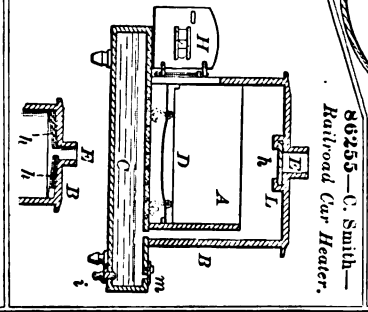

86262—C. Wells—*Cultivator.*

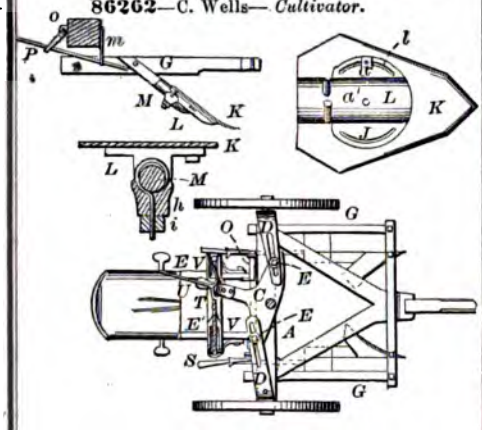

86264—White & Henson—*Pump.*

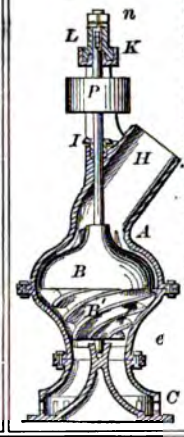

86266—E. L. Abbott—*Shaft Coupling.*

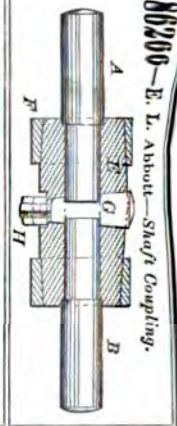

86265—W. N. Whiteley—*Harvester Rake.*

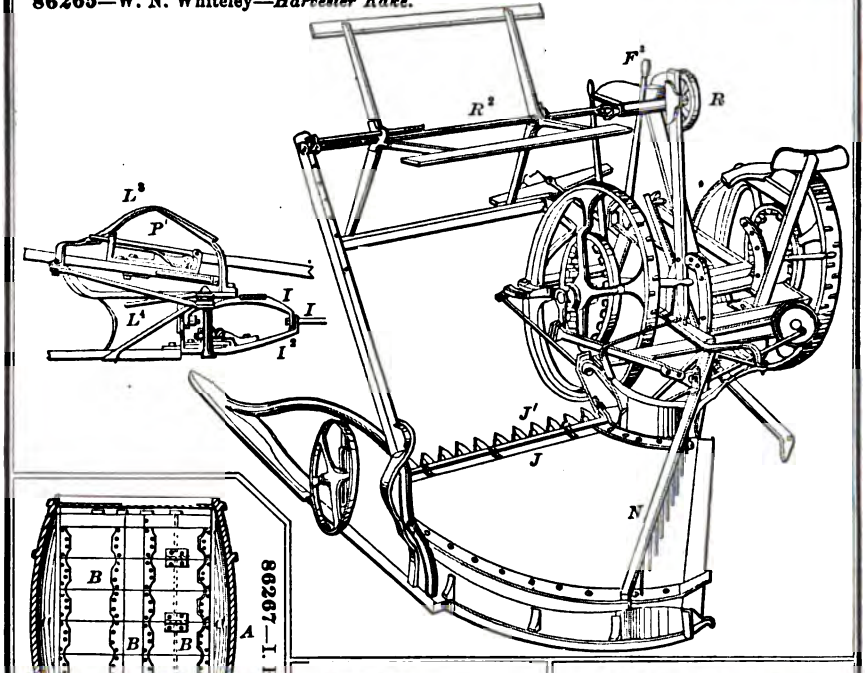

86267—I. R. Amsden—*Egg and Fruit Carrier.*

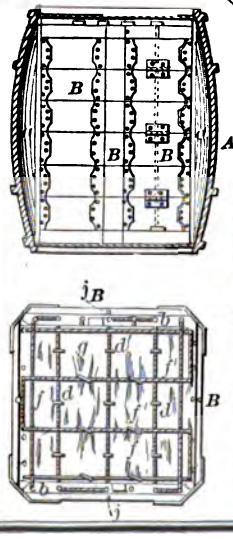

86268—G. Baker—*Valve for Steam and other Engines.*

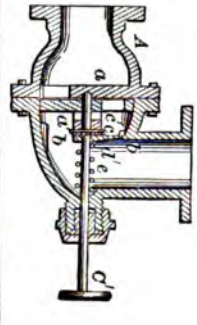

86269—C. J. Baldwin—*Churn Dasher.*

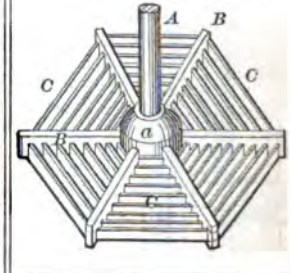

86270—D. H. Ball—*Heater for Mills.*

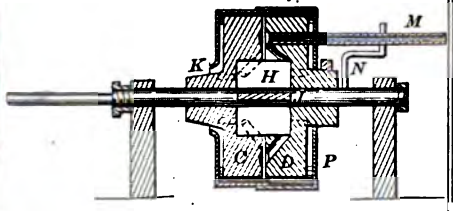

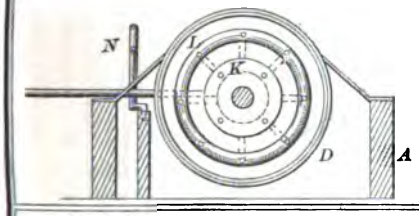

86271—D. H. Ball—*Circular Saw Mill.*

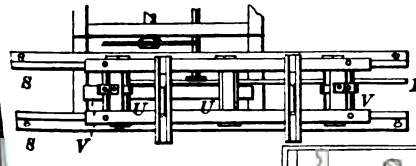

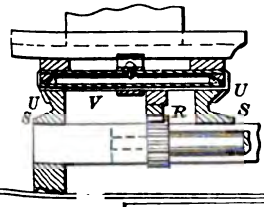

86272—W. N. Bartholomew—*Slate Frame.*

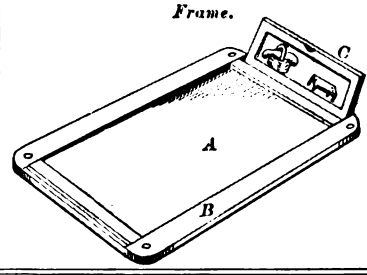

86273—C. E. Blake—*Pump Device for Steam and other Enginery.*

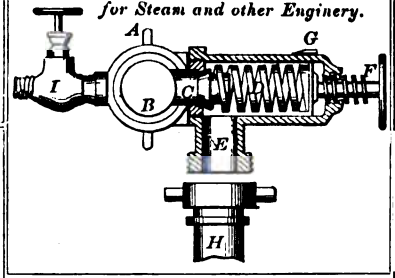

86274—T. H. Body—*Churn.*

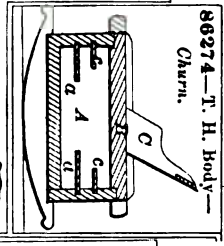

86276—J. Brady—*Latch and Lock.*

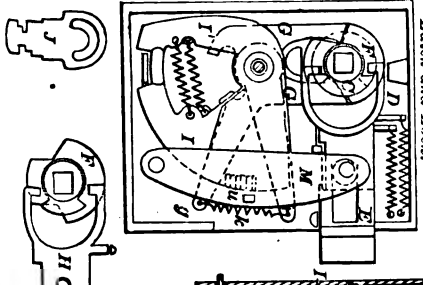

86277—F. Brewster—*Railroad Ticket Case.* J

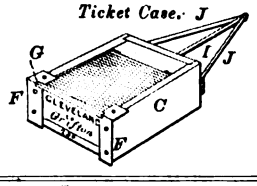

86278—W. H. Busser—*Carriage Top.*

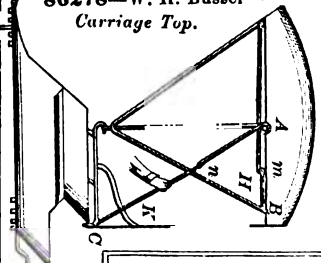

86280—I. D. Carter—*Fence.*

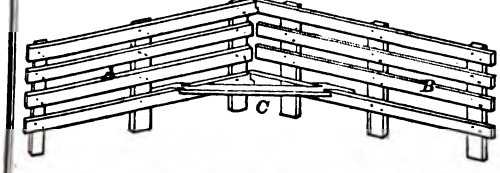

86281—C. H. Collins—*Railway Rail.*

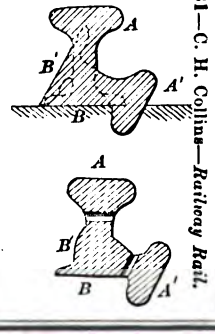

86279—W. Carr—*Fellow Sawing Machine.*

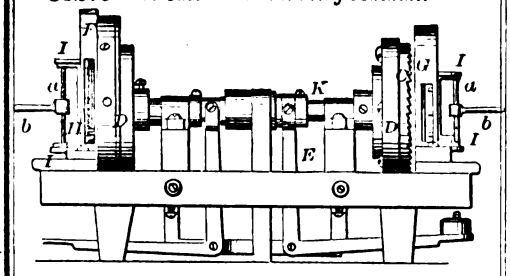

86282—J. W. Custer—*Shutter Bolt.*

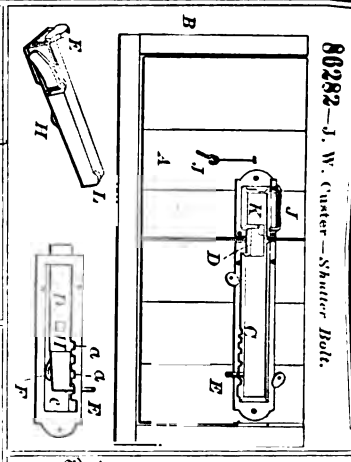

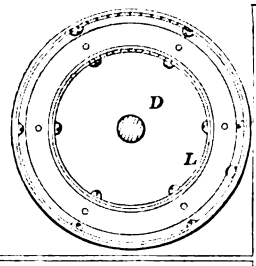

86285—C. F. Dean—*Barrel Hoop Loosener and Nail Extractor.*

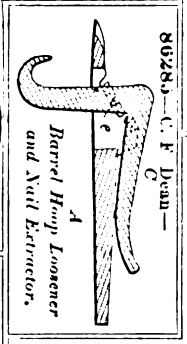

86287—A. M. Dix—*Pumping Apparatus.*

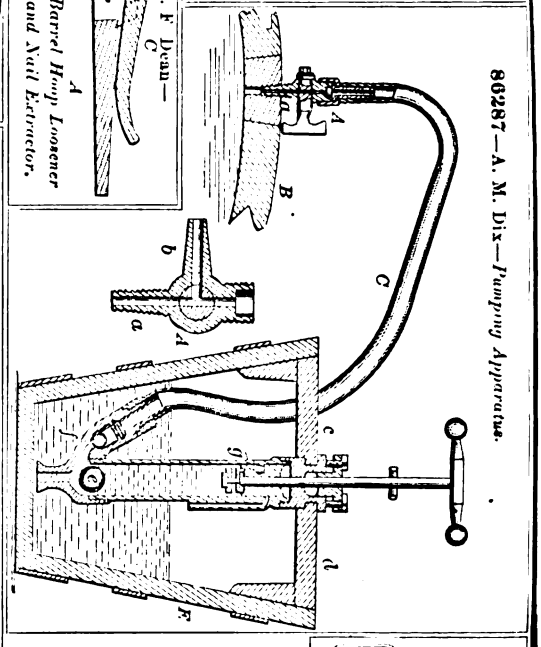

86286—H. Disston—*Hardening and Straightening Circular Saw Blades.*

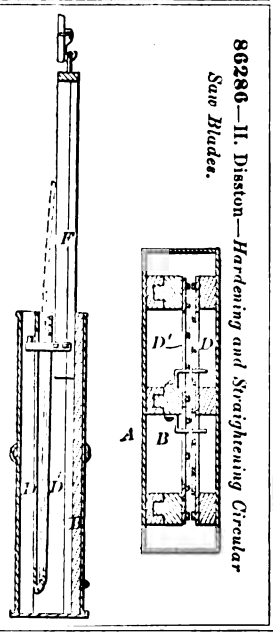

86291—H. N. Eagle—*Lamp Chimney.*

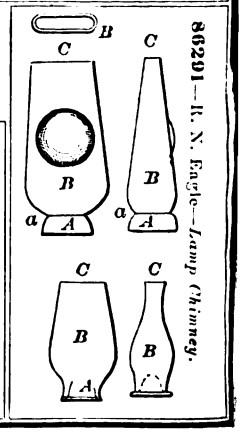

86289—A. Duvall—*For Mixing Liquids with Powder for Phosphates, &c.*

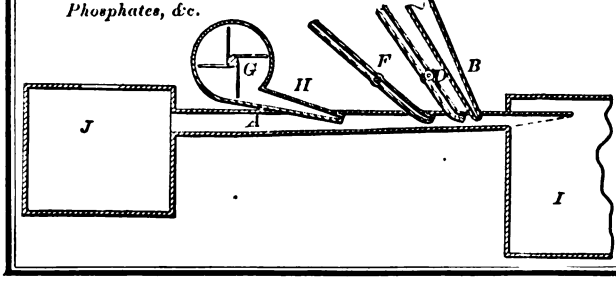

86295—P. S. Foster—*Bench Plane.*

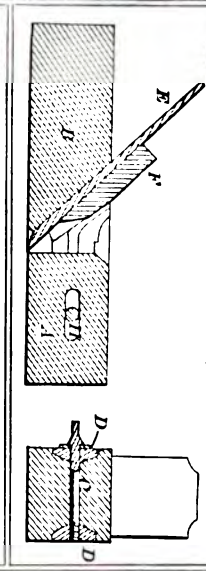

86288—W. A. Donnell—*Seed Drill and Corn Coverer.*

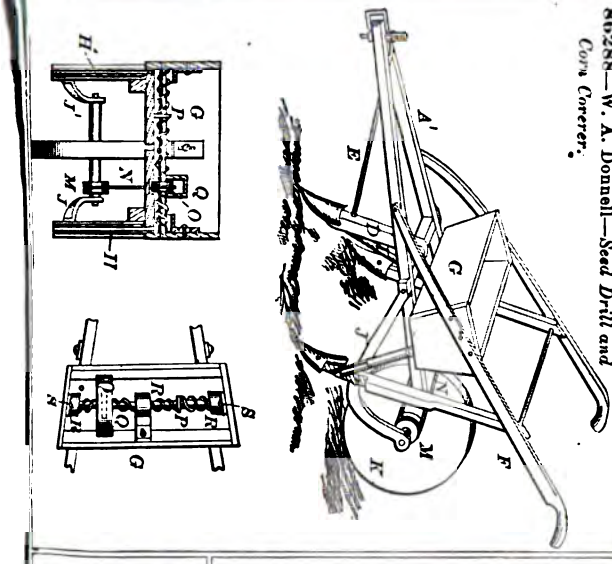

86290—A. Duvall—*Submarine Excavator.*

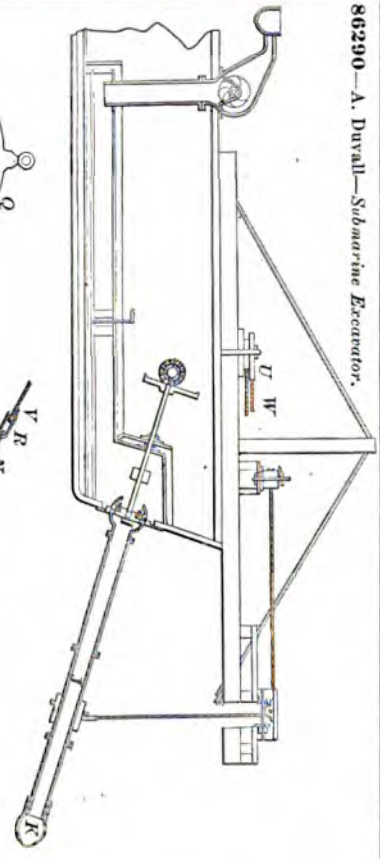

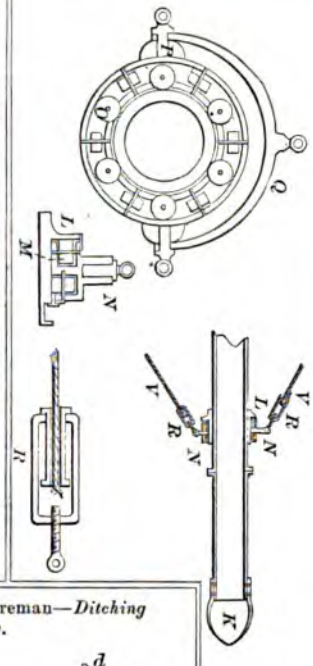

86296—D. C. Gately—*Vulcanized Packing.*

86294—E. L. Foreman—*Ditching Plow.*

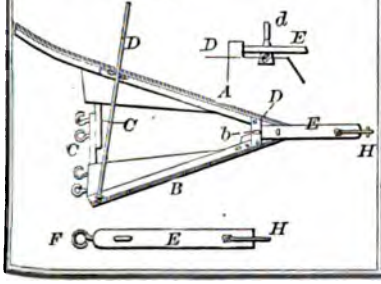

86292—R. H. Fisher—*Power Press.*

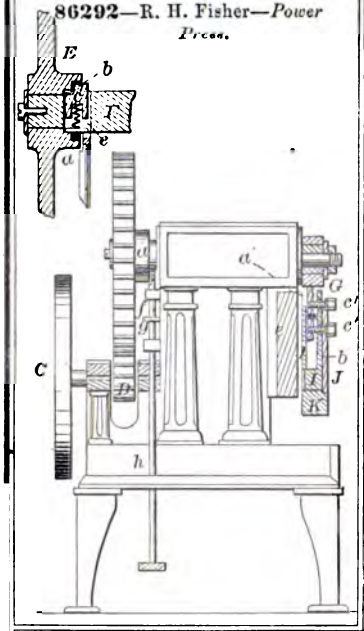

86293—H. K. Forbis—*Mortising Machine.*

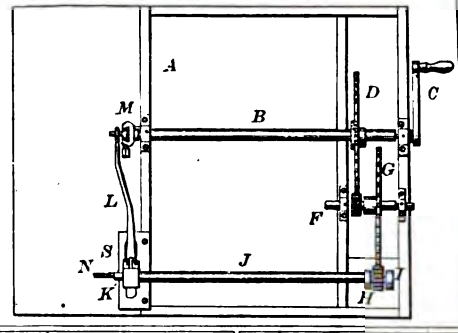

86298—E. B. Gould—*Horse Collar Fastening.*

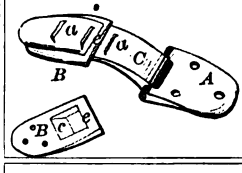

86300—H. Gross—*Letter Opener.*

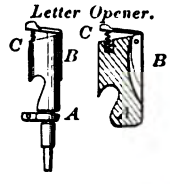

86297—Gilmore & Anderson—*For Dressing Millstones.*

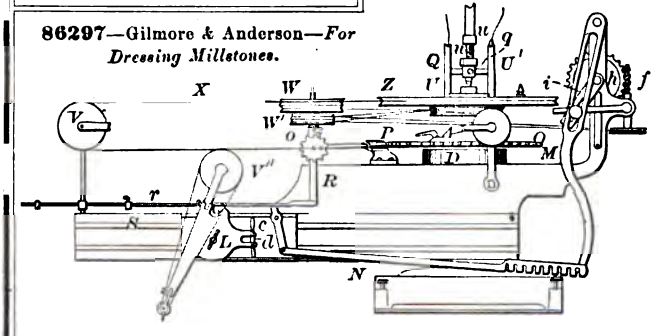

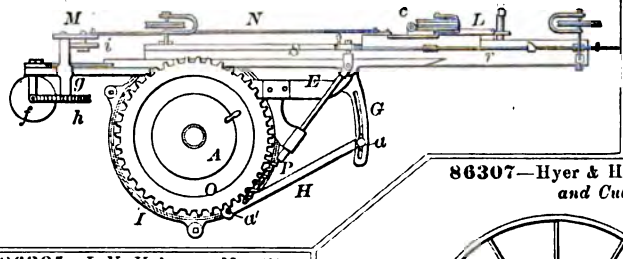

86301—E. K. Haynes—*Lamp Burner.*

86306—W. M. Hurlbert—*Cultivator Teeth.*

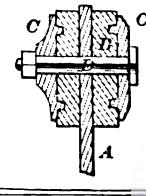

86307—Hyer & Hudson—*Seed Sower and Cultivator.*

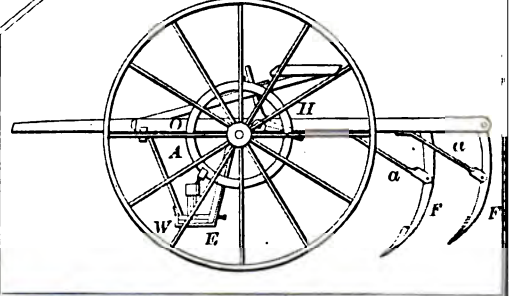

86305—I. V. Holmes—*Metallic Lathing.*

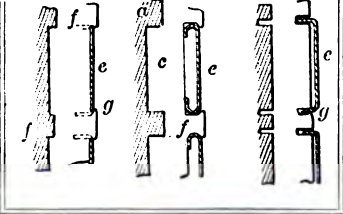

86302—E. Hobbs—*Iron Nut Machine.*

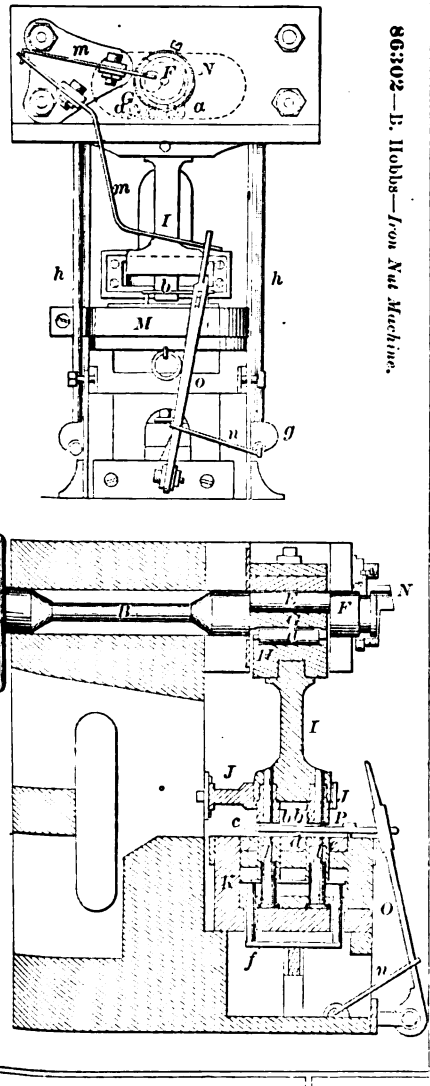

86304—Holley & Pearse—*For the Manufacture of Iron and Steel.*

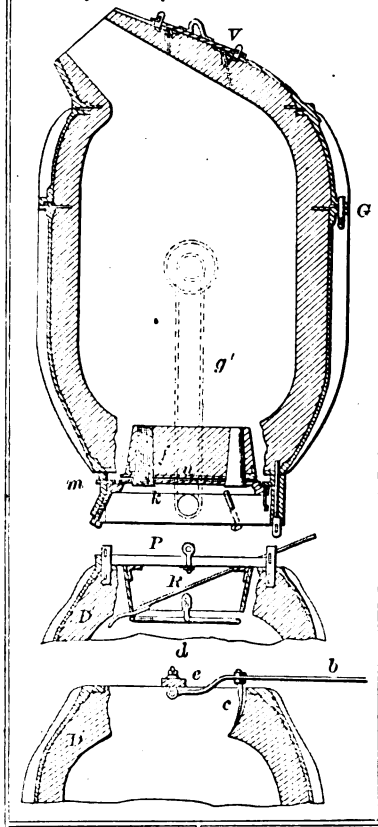

86308—R. E. Jones—*Gauge.*

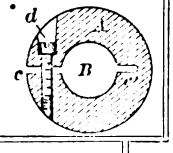

86309—W. Kaiser—*Table.*

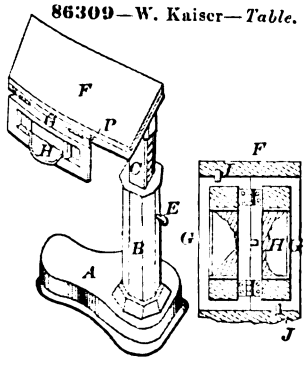

86310—J. I. Mabbett—*Weather Strip for Doors.*

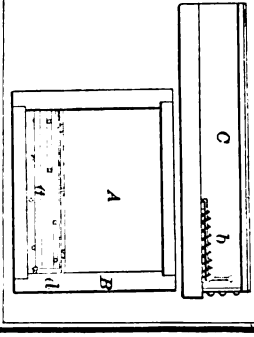

86311—E. Matteson—*Rotary Steam Engine.*

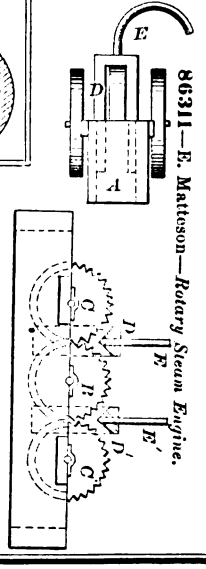

86303—A. L. Holley—*Manufacture of Iron and Steel by the Bessemer Process.*

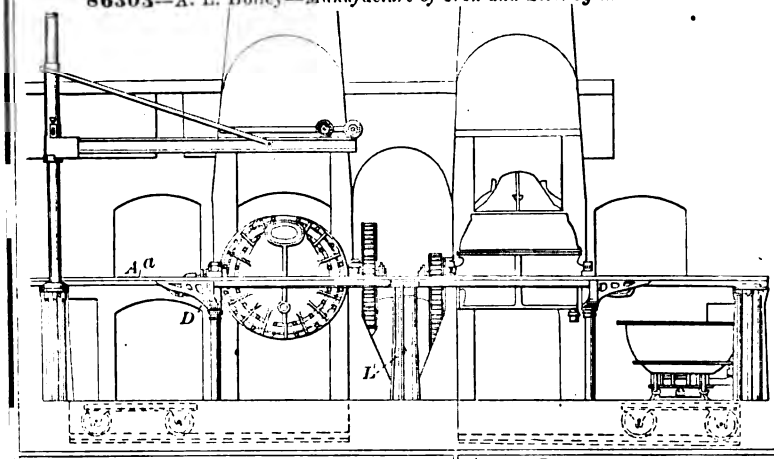

86313—T. B. McConaughey—*Fertilizer and Seed Drill.*

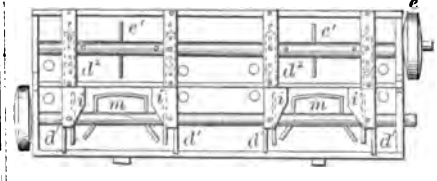

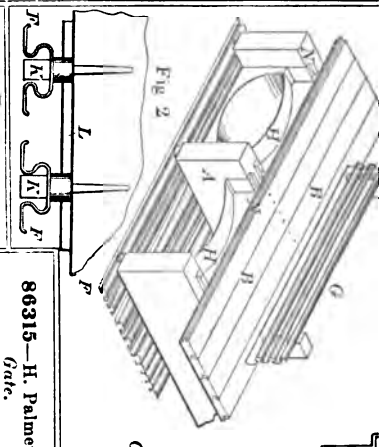

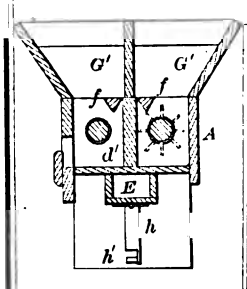

86315—H. Palmerlee—*Gate.*

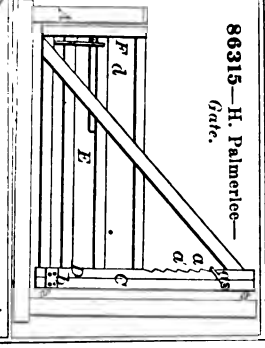

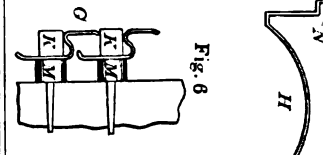

86317—T. Piper—*For Sticking Pins.*

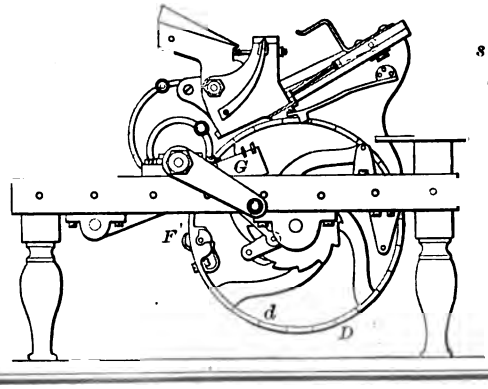

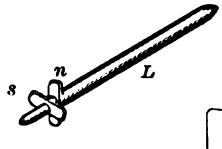

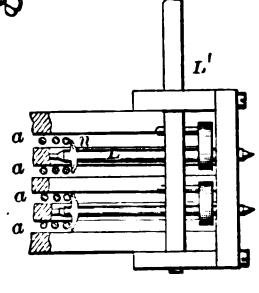

86314—J. Montgomery—*Rolling Mill.*

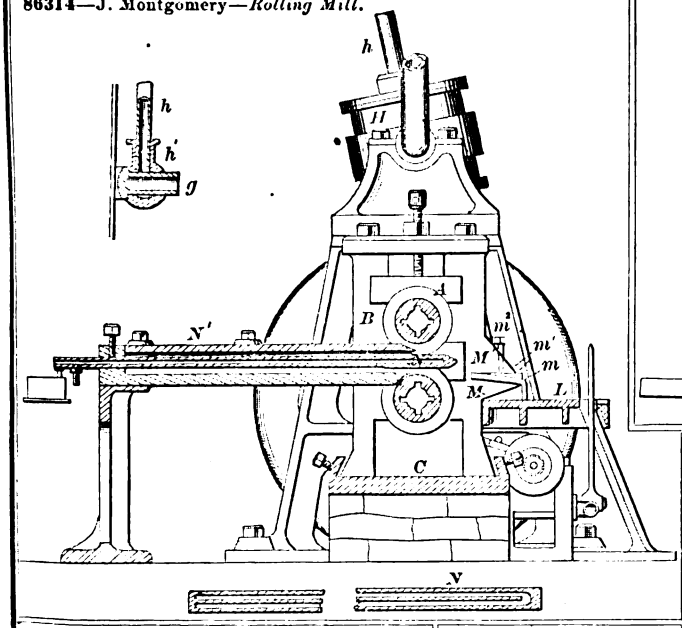

86316—C. N. Peterson—*Packing for Piston Rods.*

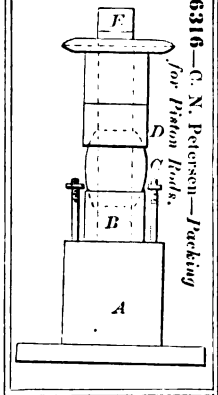

86318—I. Powars—*Door Spring.*

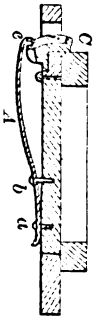

86323—J. Ryer—*Vault Cover.*

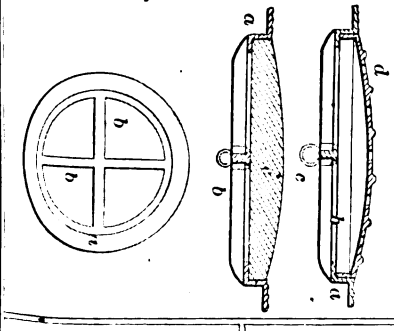

86319—J. Reakirt—*Putting up Caustic Alkalies.*

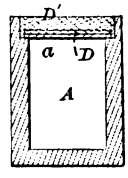

86320—Reichenbach & Golay—*Blowing Machine.*

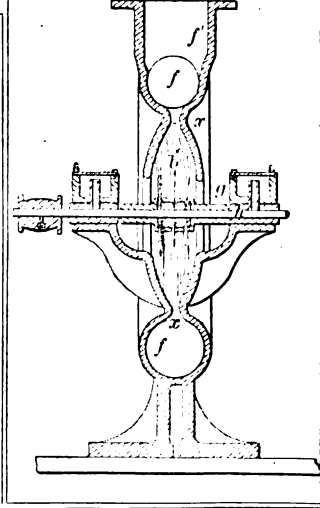

86321—G. H. Reynolds—*Steam Generator.*

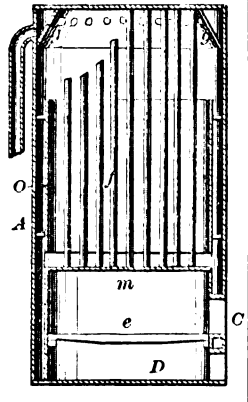

86322—P. C. Rowe—*Wrench.*

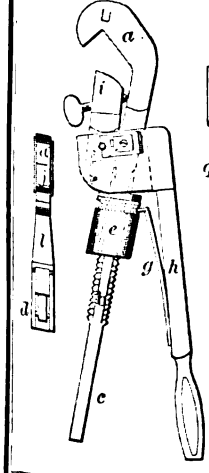

86324—Scott & Wood—*Punching Machine.*

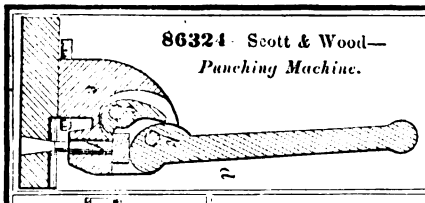

86325—H. W. & B. C. Smith—*Sled Brake.*

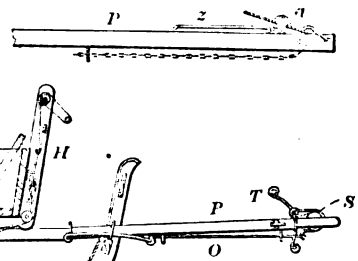

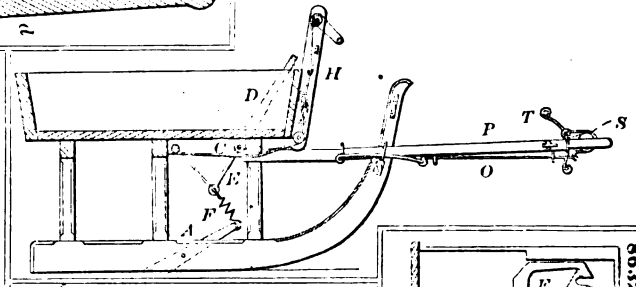

86327—W. L. Starlin—*Tuyere.*

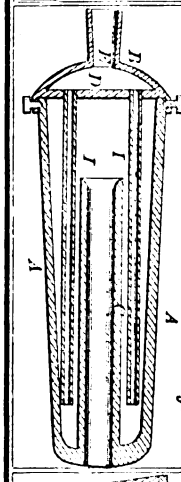

86326—W. E. & H. H. Sparks—*Latch.*

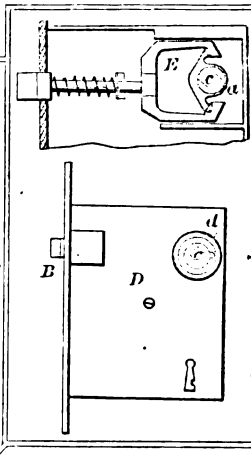

86328—A. D. Tate—*Mop Wringer.*

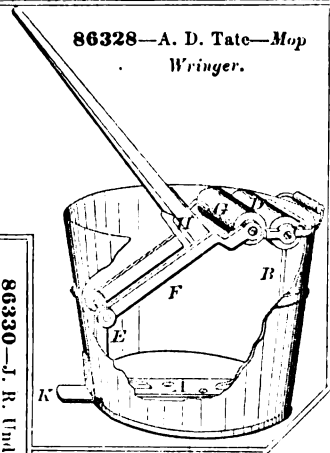

86330—J. R. Underwood—*Washing Machine.*

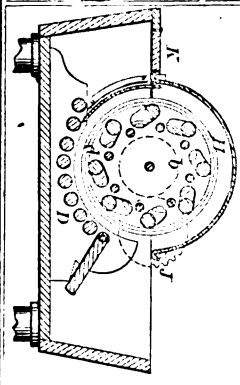

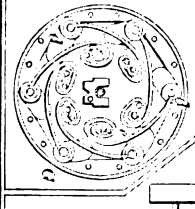

86332—W. J Walker—*Seed Separator.*

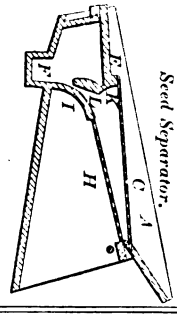

86329—Tobias & Bates—*Cultivator.*

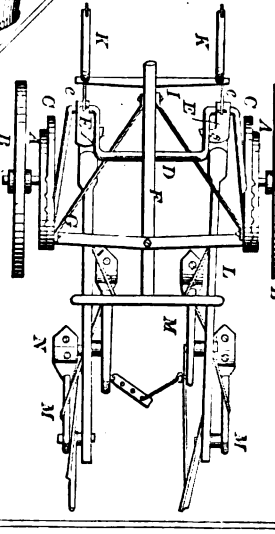

86335—A. W. Wilcox—*Reed Organ.*

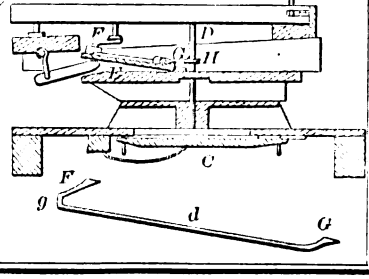

86333—J. T. Warren—*Fruit Picker.*

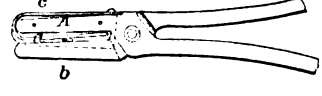

86334—Weston & Dennis—*Cloth Press.*

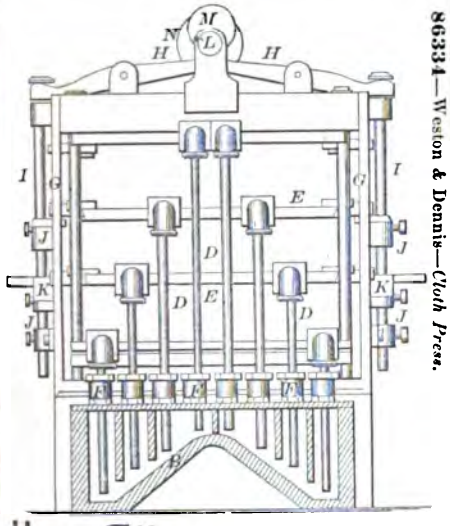

86336—J. D Wright—*Mosquito Fan and Air Circulator.*

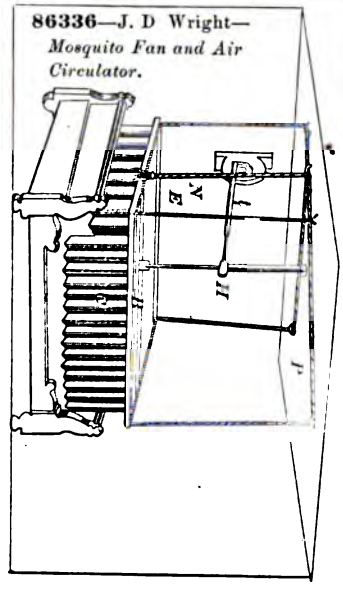

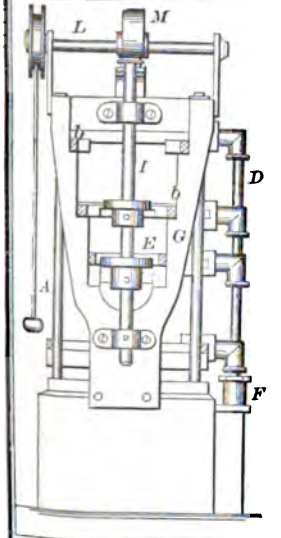

86338—C. W. Saladee—*Collar.*

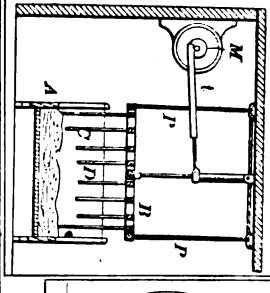

86339—Greenwood & Husted—*Velocipede.*

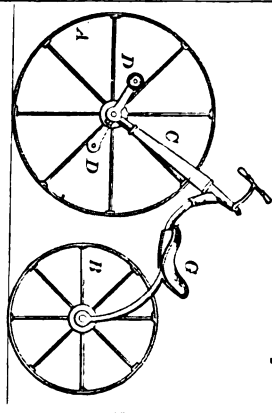

86337—D. Zink—*Parlor Ten Pin Toy.*

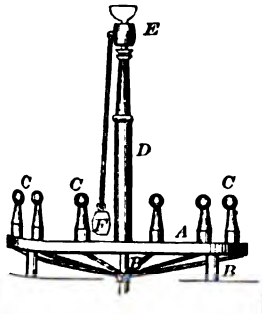

86340—H. A. Horn—*Hoop Skirt.*

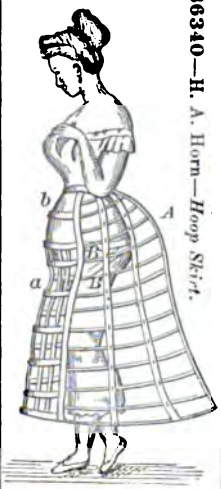

86342—B. F. Adams—*Fly Screen for Animals.*

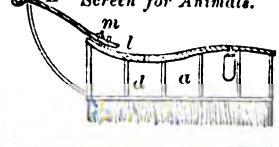

86341—J. Absterdam—*Safety Valve.*

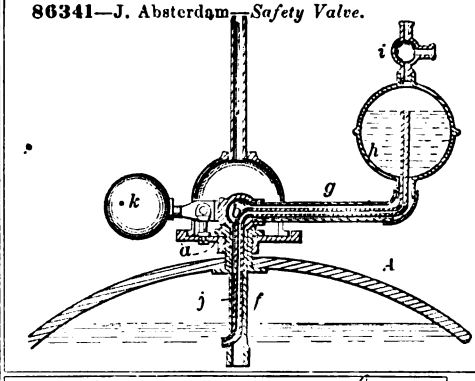

86343—J. Alexander—*Churn.*

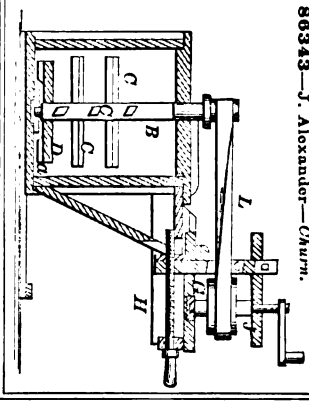

86345—Armstrong & Jeffcoat—*Hay Raker and Loader.*

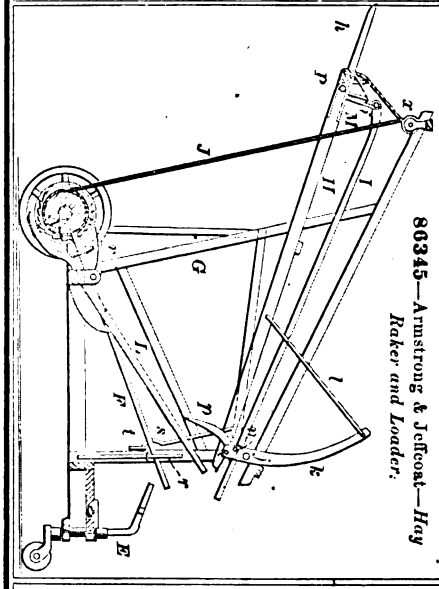

86346—J. Ashcroft—*Steam Safety Valve.*

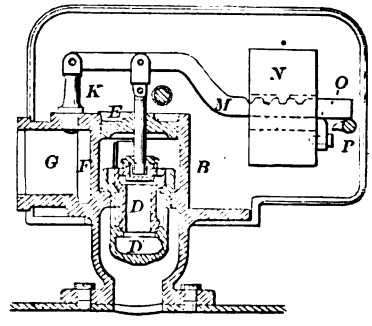

86344—J. J. Anderson—*Sofa Bedstead.*

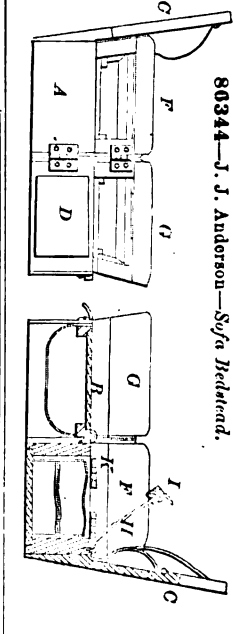

86347—H. J. Bailey—*For Tin Lined Lead Pipe.*

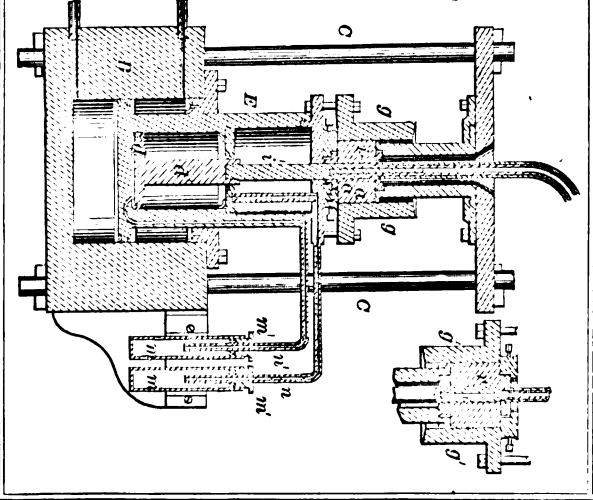

86348—J. Balpach—*Carriage Spring.*

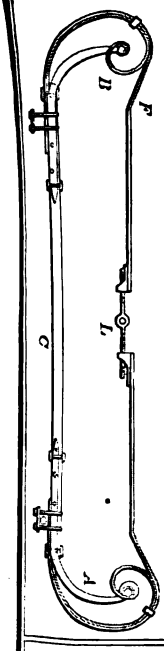

86349—W. C. Barr—*Cherry Pitter.*

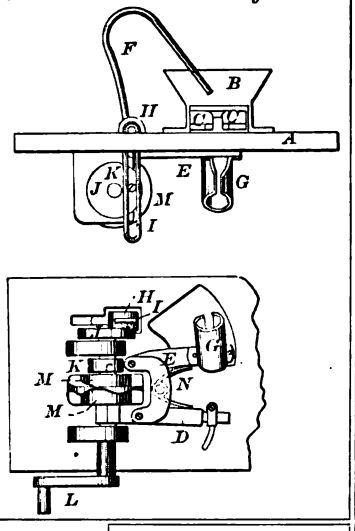

86350—G. S. Barton—*Steam Dryer.*

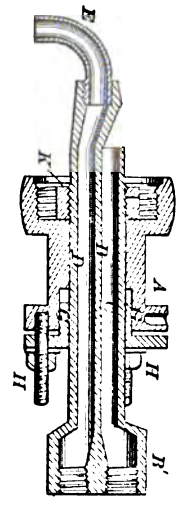

86351—E. S. Bennett—*Mop and Scrubber.*

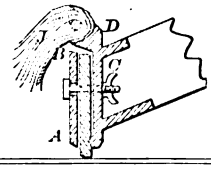

86353—L. R. Blake—*Pincers. Nail Maker and Device for Lasting Boots.*

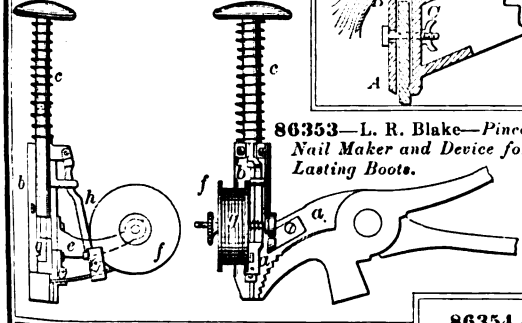

86356—H. H. Bryant—*Fireproof Safe.*

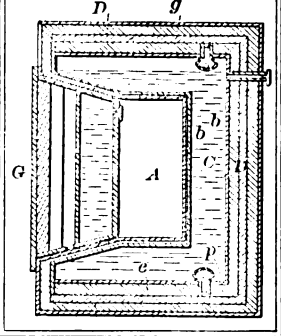

86352—S. Bennett—*For Grinding Tools.*

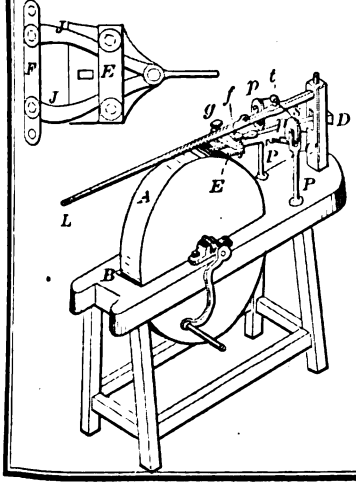

86354—S. Bowman—*Grain Drill Attachment.*

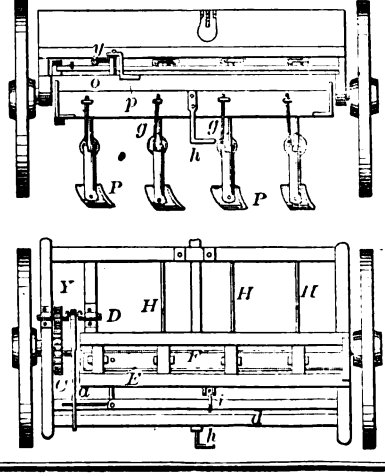

86324—Scott & Wood—*Punching Machine.*

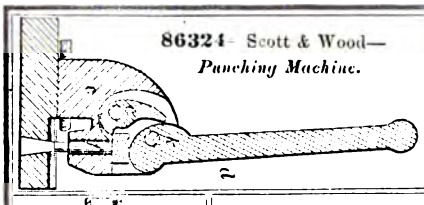

86325—H. W. & B. C. Smith—*Sled Brake.*

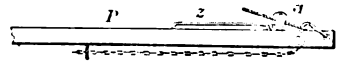

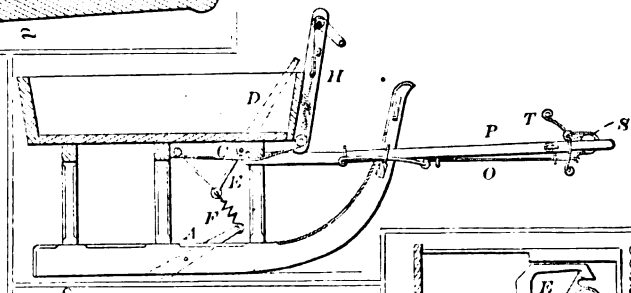

86326—W. E. & H. H. Sparks—*Latch.*

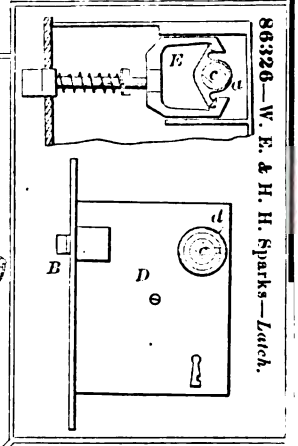

86327—W. L. Starlin—*Tuyere.*

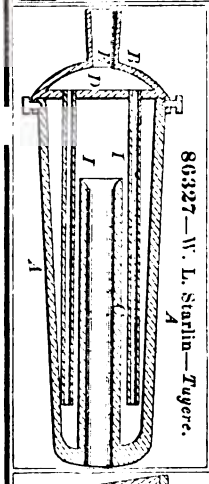

86328—A. D. Tate—*Mop Wringer.*

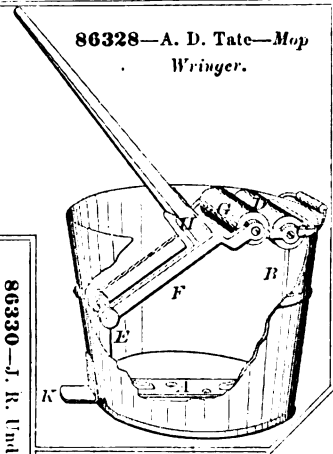

86329—Tobias & Bates—*Cultivator.*

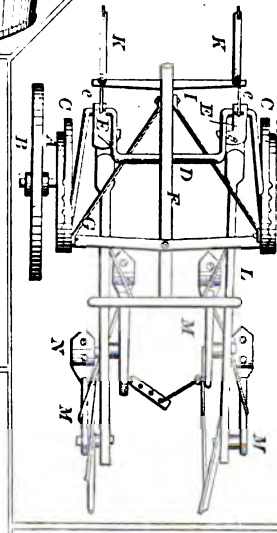

86330—J. R. Underwood—*Washing Machine.*

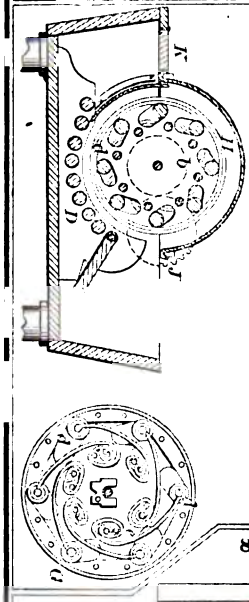

86332—W. J Walker—*Seed Separator.*

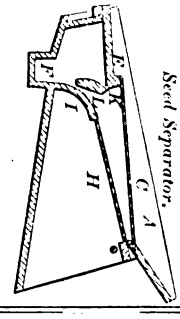

86333—J. T. Warren—*Fruit Picker.*

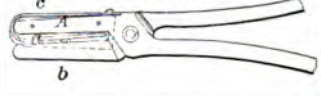

86335—A. W. Wilcox—*Reed Organ.*

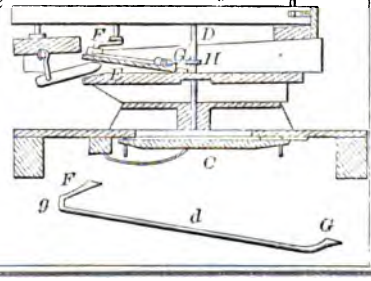

86365—T. Cleary—*Shuttle Box in Looms.*

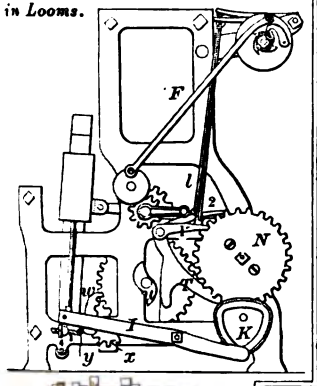

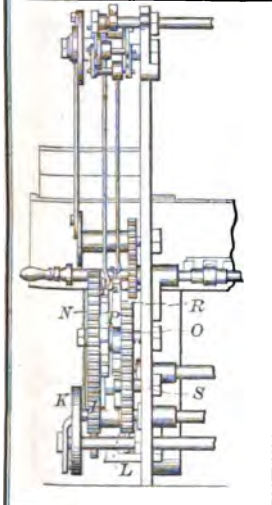

86367—T. S. Coffin—*Scythe Snath.*

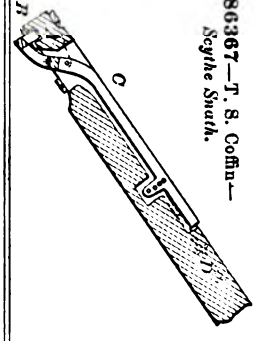

F 86370—A. E. Cruttenden—*Plow Attachment.*

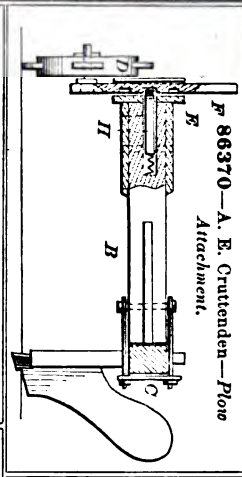

86372—J. A. Davis—*Feed Water Device for Boilers.*

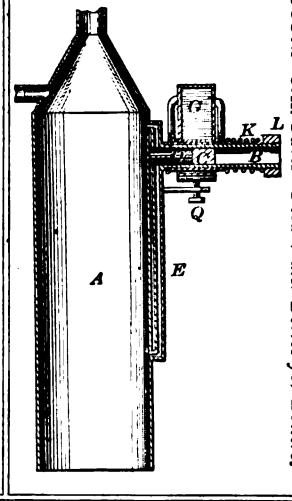

86373—J. A. Davis—*Steam Generator.*

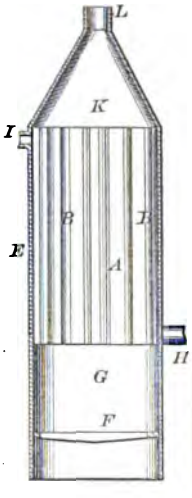

86371—G. A. Dabney—*Churn.*

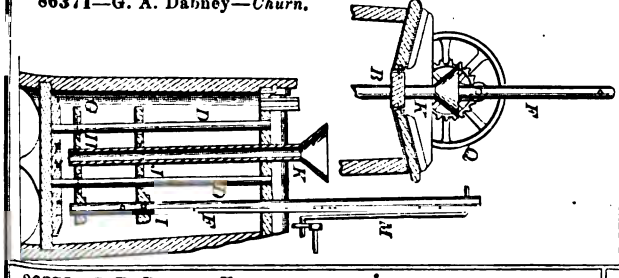

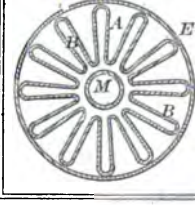

86375—S. P. Doane—*Harvester.*

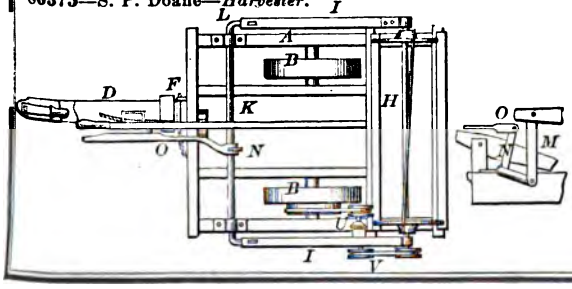

86377—F. Egge—*Padlock.*

86374—W. Dennison—*Skating Rink.*

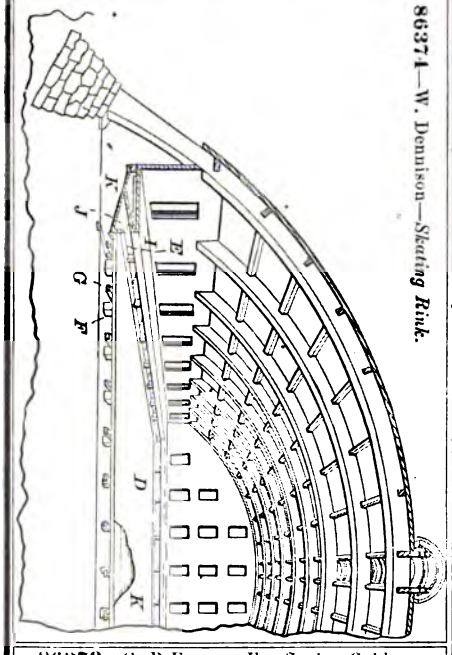

86376—C. Drew—*Harness Pad.*

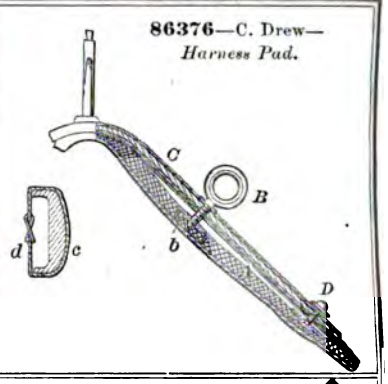

86378—Elson & Schaefer—*Fire Arm.*

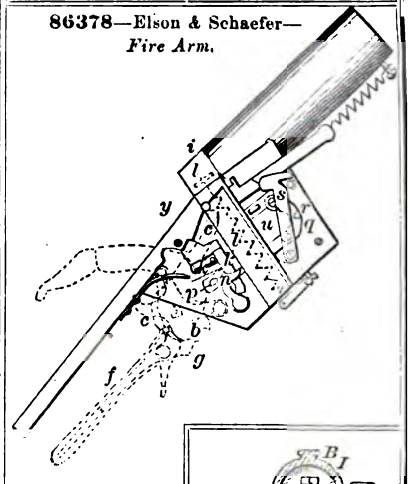

86379—G. R. Evans—*For Saving Gold, Amalgam and Quicksilver.*

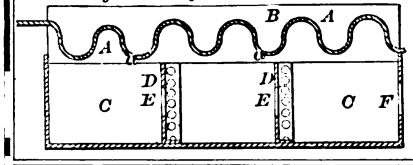

86380—H. F. Evans—*For Tarred Paper, Pasteboard, &c.*

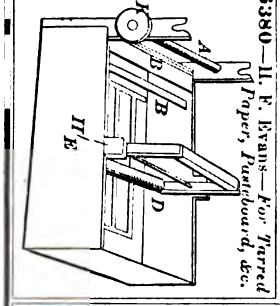

86385—H. Friedländer—*Kettle for Boiling Milk.*

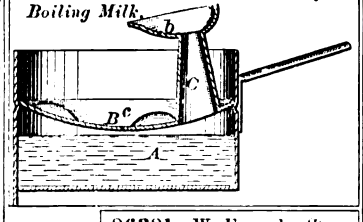

86384—L. Fitton—*Hydrant.*

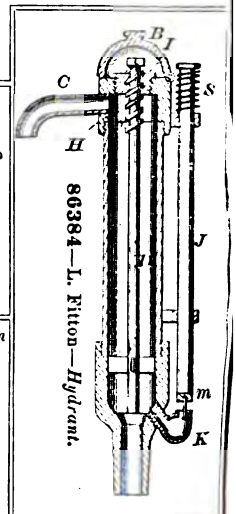

86381—W. Evered—*Steam Engine Balanced Valve.*

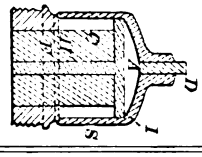

86383—A. Fishburn—*Gate Post.*

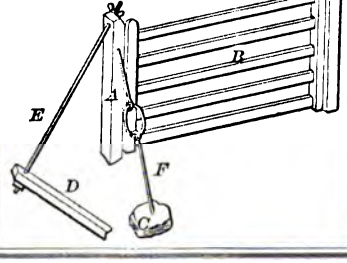

86382—F. L. Faries—*Tree Protector.*

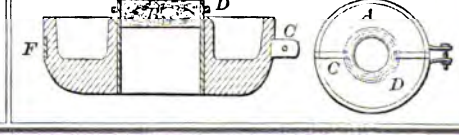

86386—W. C. Gardner—*Corn Planter.*

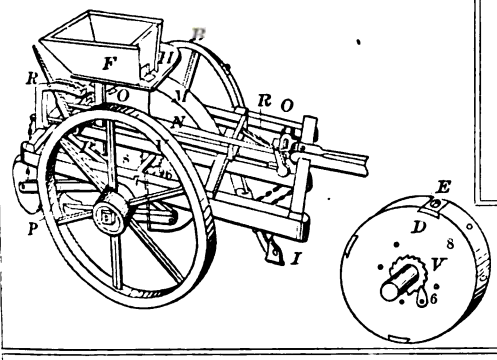

86387—D. C. Gately—*Anti-Rattler for Carriages.*

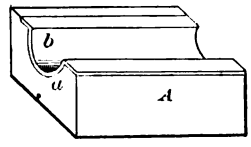

86388—D. Guy, Jr.—*For Saving Floating Gold.*

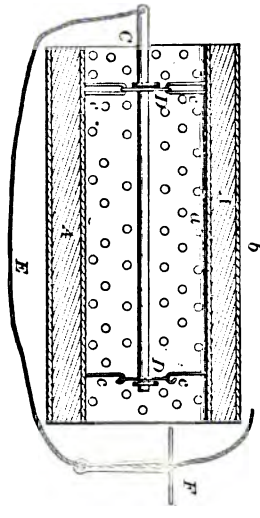

86389—D. L. Gibbs—*Mortising Machine.*

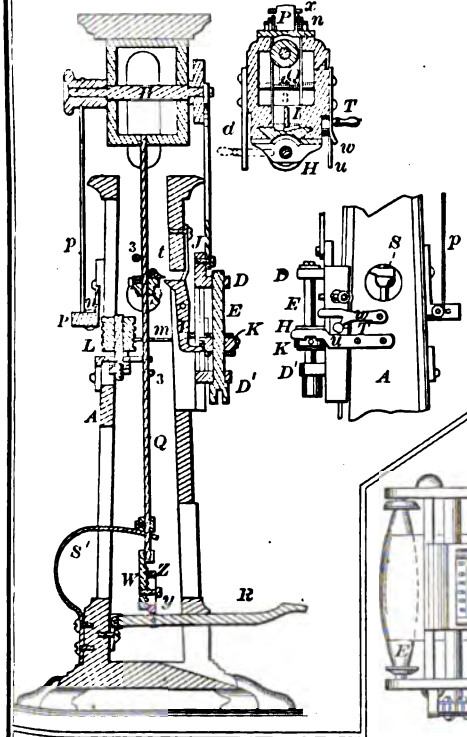

86390—J. W. Goff—*Box for Locomotive Driving Axles.*

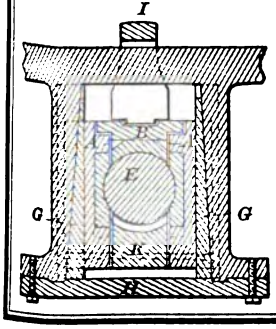

86391—E. Greenlee—*Fruit Mill.*

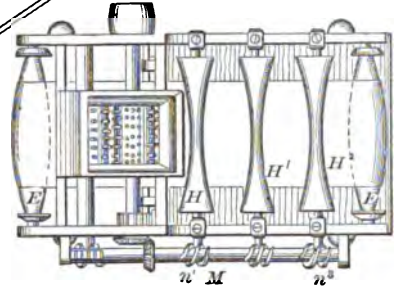

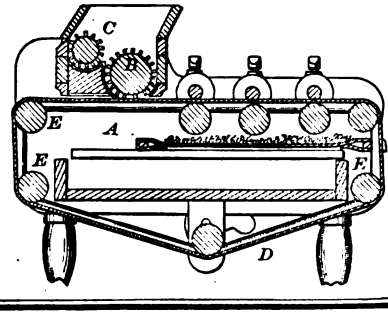

86392—J Haas—*Shaft Bearing.*

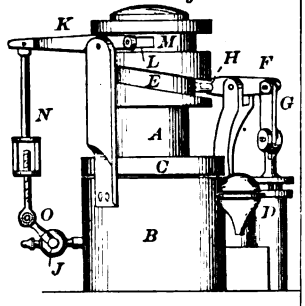

86393—C. H. Hall—*Steam Generator.*

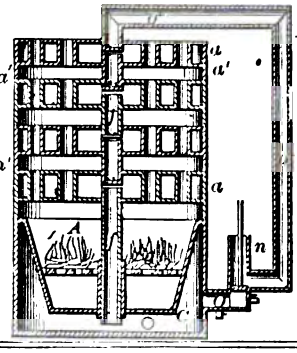

86394—A. H. Hammond—*Reed for Musical Instruments.*

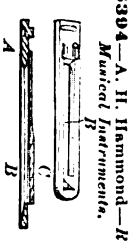

86395—C. T. Harvey—*For Towing Canal Boats.*

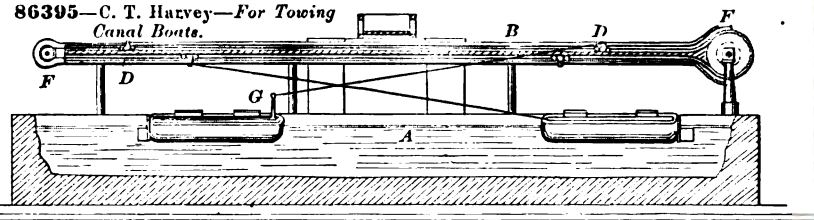

86396—J. R. Hathaway—*Burial Case.*

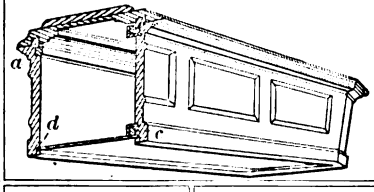

86397—J. Heilden—*Front Platform for Carriages.*

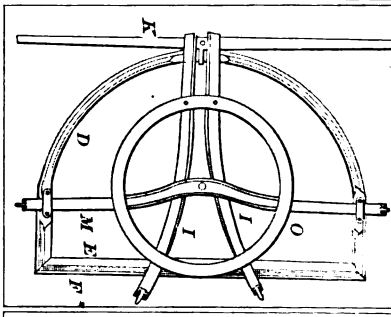

86399—W. P. Hopkins—*Steps for Spindles.*

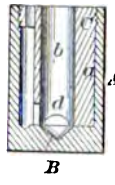

86400—S. C. Horton—*Post Hole Auger.*

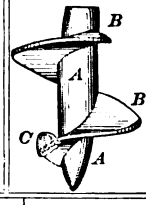

86401—C. D. House—*For Cutting and Coring Apples.*

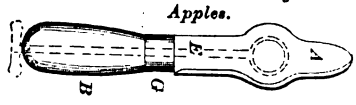

86402—A. Humphries—*Spoking Machine.*

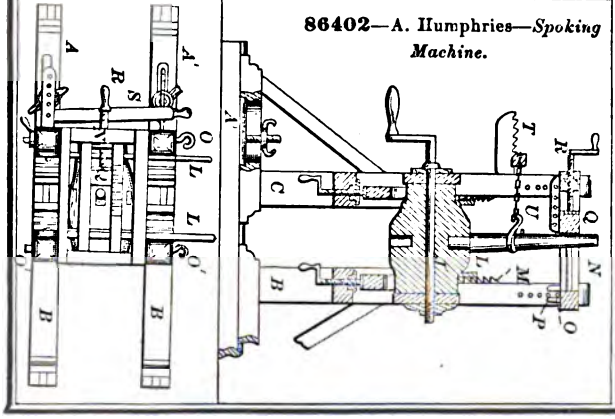

86403—C. J. Huntington—*Bag Fastener.*

86405—J. H. Irwin—*Velocipede.*

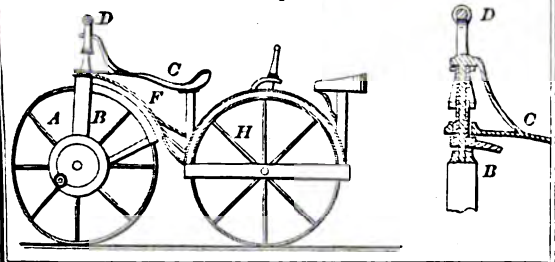

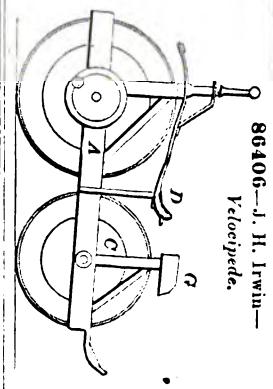

86406—J. H. Irwin—*Velocipede.*

86407—N. Jenkins—*Saw.*

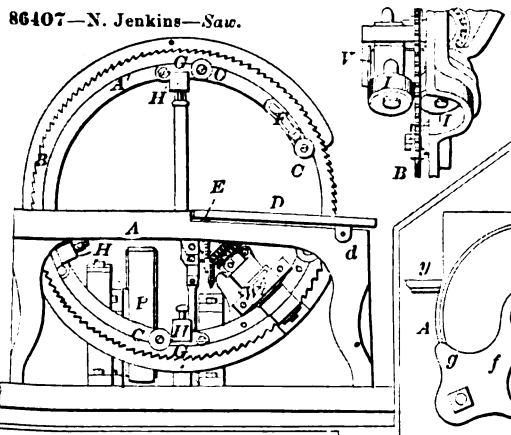

86408—W. F. Jessup—*For Seeding.*

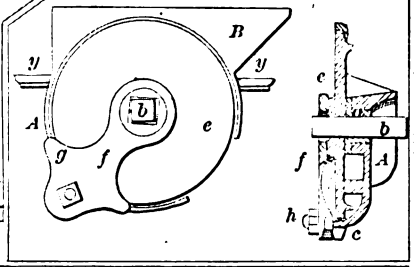

86409—A. W. Johnson—*For Working Waste Fibrous Stock.*

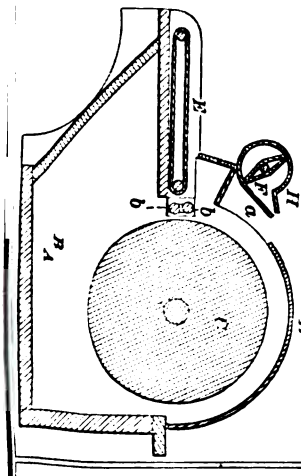

86410—G. H. Johnson—*Grain Distributor.*

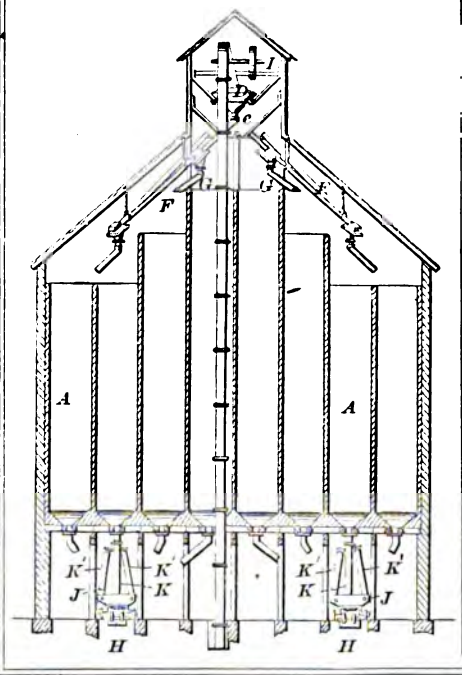

86411—F. A. Jones—*Watch Regulator.*

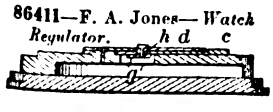

86374—W. Dennison—*Skating Rink.*

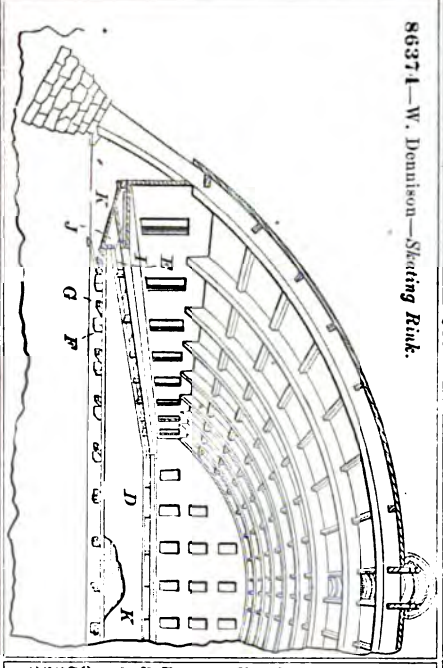

86376—C. Drew—*Harness Pad.*

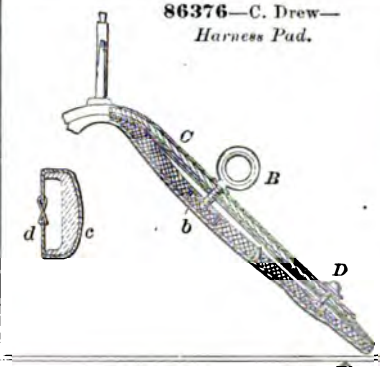

86378—Elson & Schaefer—*Fire Arm.*

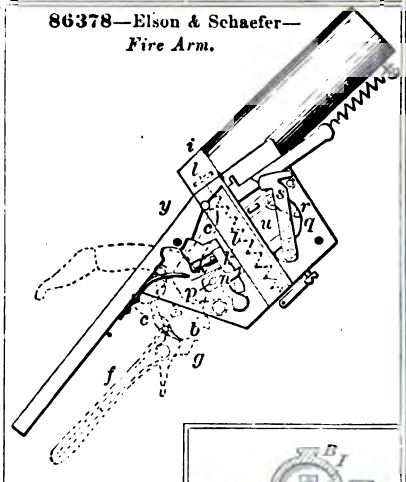

86379—G. R. Evans—*For Saving Gold Amalgam and Quicksilver.*

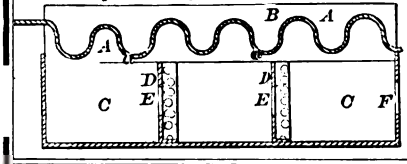

86380—H. F. Evans—*Paper, Pasteboard, &c.*

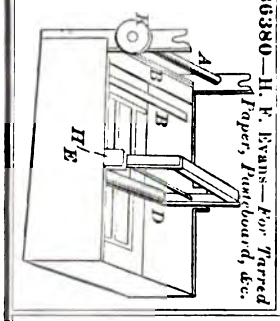

86385—H. Friedländer—*Kettle for Boiling Milk.*

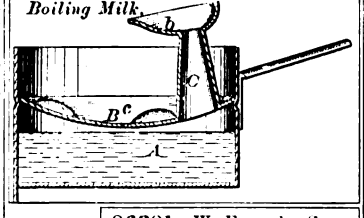

86384—L. Fitton—*Hydrant.*

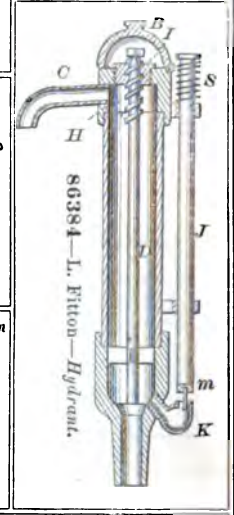

86381—W. Evered—*Steam Engine Balanced Valve.*

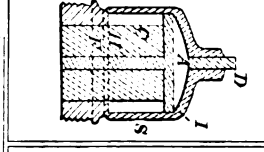

86383—A. Fishburn—*Gate Post.*

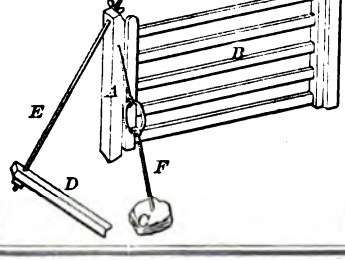

86382—F. L. Furies—*Tree Protector.*

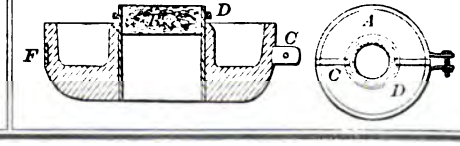

86420—I. W. Lamb—*Padlock.*

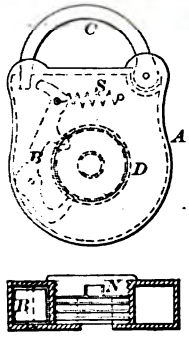

86422—J. W. Larimore—*Castor, Fruit and Cake Dish.*

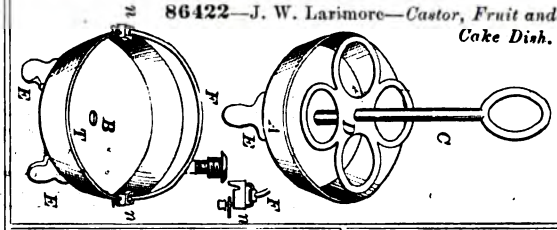

86421—F. A. Lane—*Lubricator.*

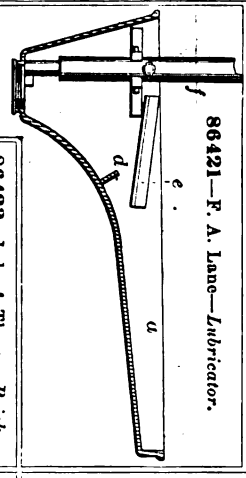

86424—G. A. Libbey—*Key Ring.*

86423—Lehr & Thorp—*Brick Machine.*

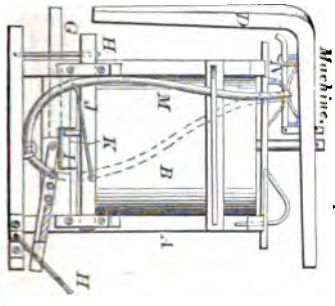

86427—W. Loft—*Kindling Block.*

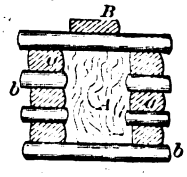

86425—R. Lighthall—*Steam Generator.*

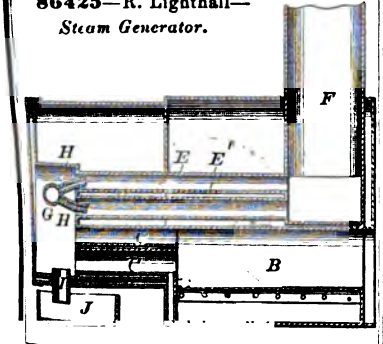

86430—O. L. Mayhew—*Milk and Beer Cooler.*

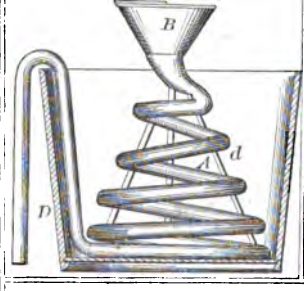

86428—S. P. Loomis—*Boiler*

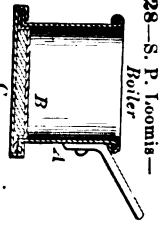

86429—C. Mason—*Steam Generator.*

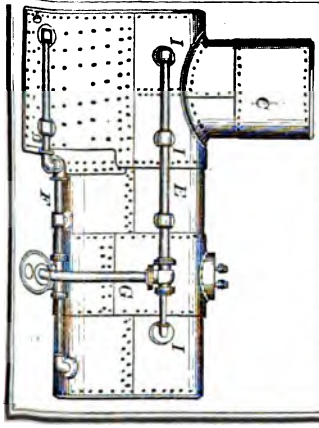

86431—J. W. McDonald—*Road Scraper.*

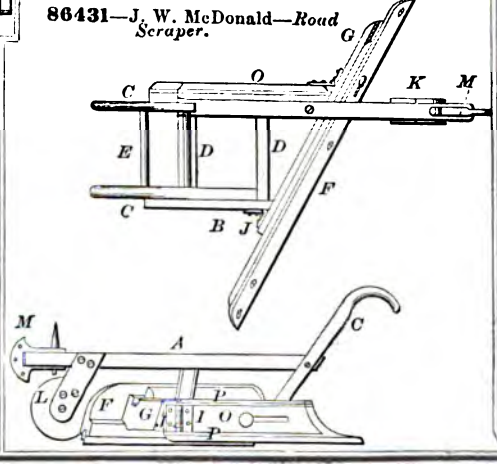

86432—R. Mears—*Globe Valve.*

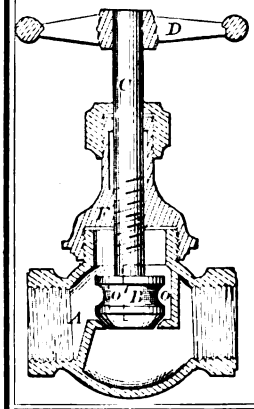

86436—J. J. Munger—*Grain Dryer.*

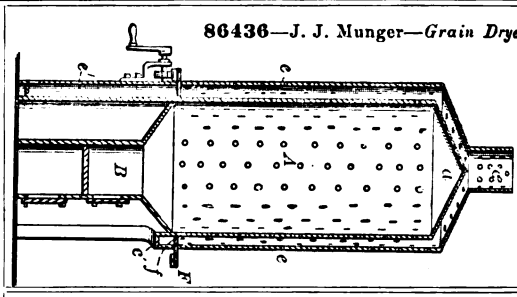

86434—W. Morgenstern—*Fire Arm.*

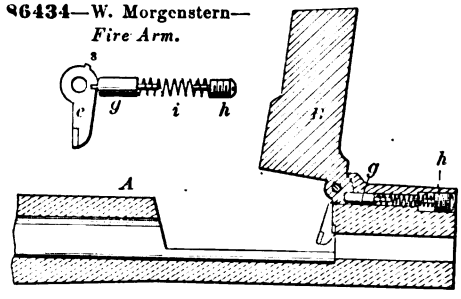

86433—D. M. Mefford

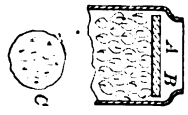

For Preserving Fruit.

86438—Palmer & Leslie—*Ticket Punch.*

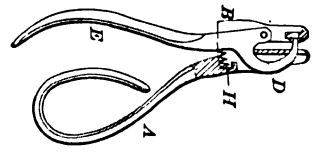

86437—G. W. Ouram—*Shutter Fastening.*

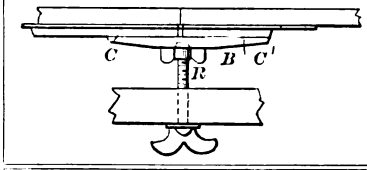

86439—G. C. Pattison—*Anchor.*

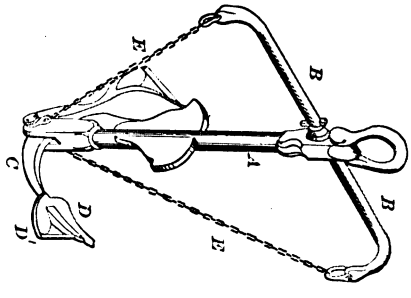

86435—J. S. Mullin—*Steam Generator.*

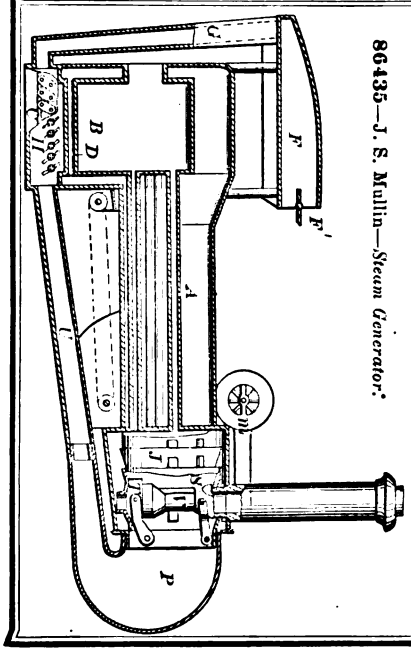

86440—J. Peard—*School Desk.*

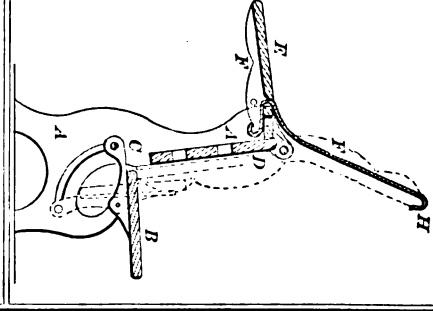

86441—J. Pearson—*Beehive.*

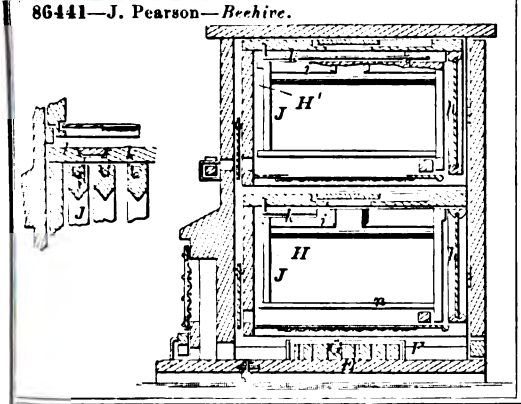

86444—E. W. Porter—*Tea Pot Handle.*

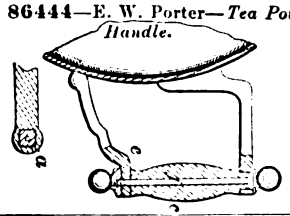

86448—O. B. Rand—*Knob Latch.*

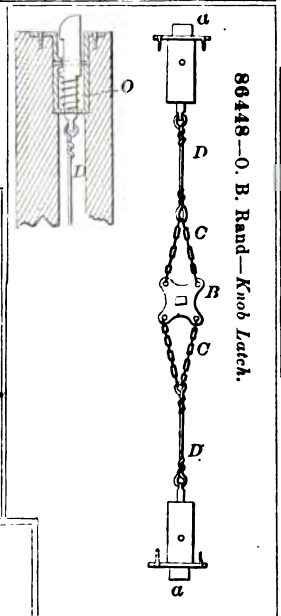

86447—Radford & Sawyer—*Globe Valve.*

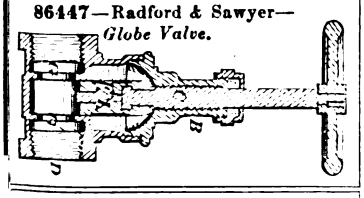

86446—Quinn & Putnam—*Bottle Stopper.*

86445—G. L. Price—*Carpet Rag Looper.*

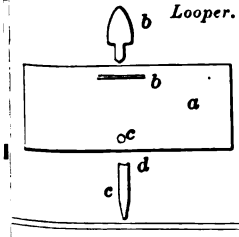

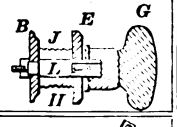

86442—C. J. C Petersen—*Potato Planter, Cultivator and Digger.*

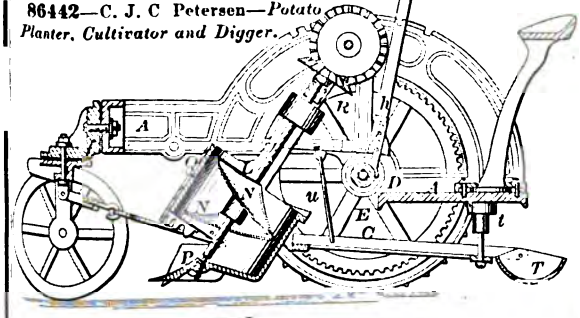

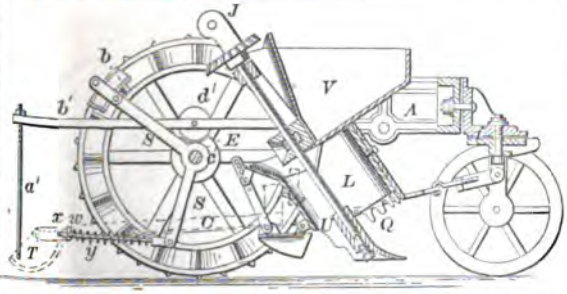

86443—S. Platt—*For Evaporating Brine, &c.*

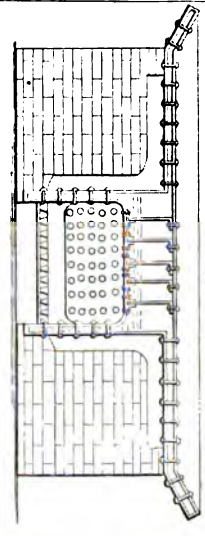

86432—R. Mears—*Globe Valve.*

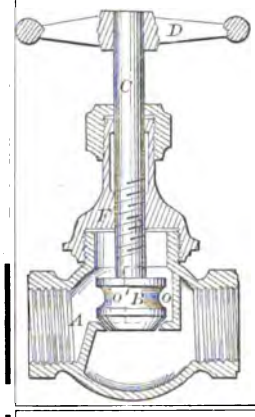

86433—D. M. Mefford

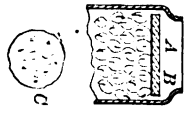

For Preserving Fruit.

86436—J. J. Munger—*Grain Dryer.*

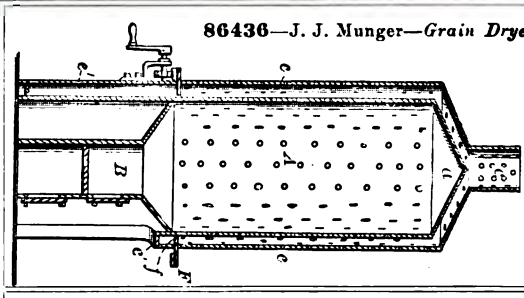

86434—W. Morgenstern—*Fire Arm.*

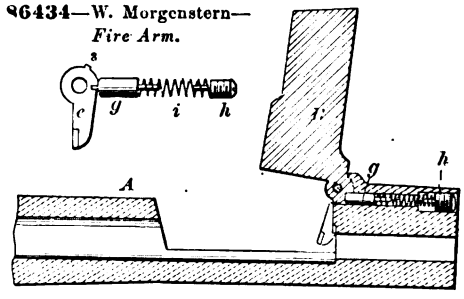

86438—Palmer & Leslie—*Ticket Punch.*

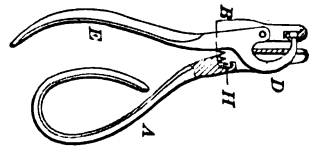

86437—G. W. Ouram—*Shutter Fastening.*

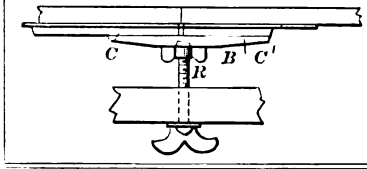

86439—G. C. Pattison—*Anchor.*

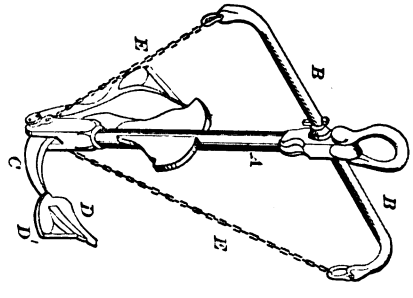

86435—J. S. Mullin—*Steam Generator.*

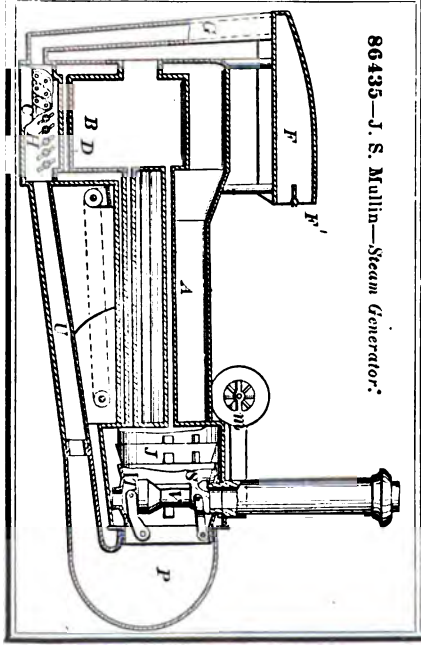

86440—J. Peard—*School Desk.*

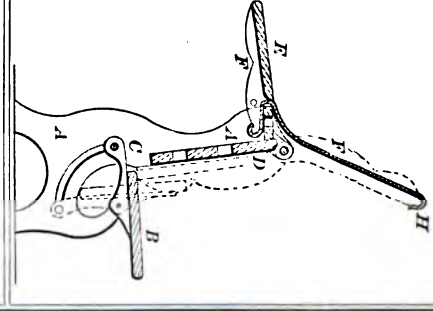

86511—J. D. Custer—*Harvester Rake.*

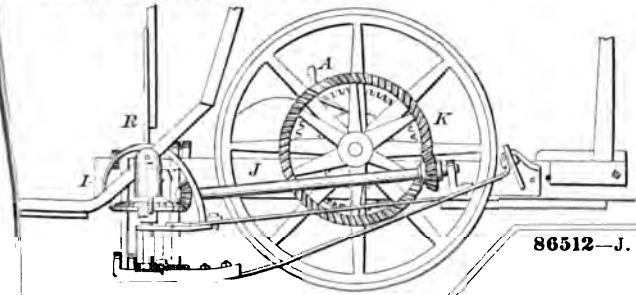

86512—J. J. Diehl—*Door Mat.*

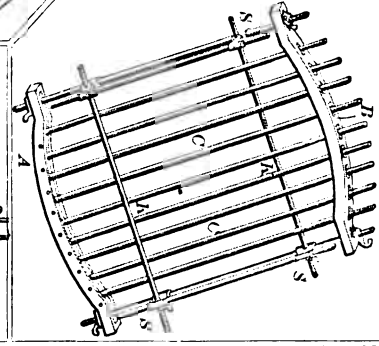

86514—H. H. Eames—*Desulphurizing and Treating Ores.*

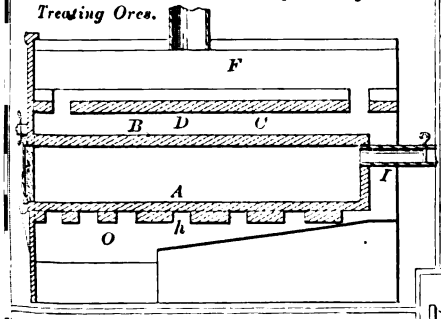

86515—R. Eaton—*Feed Water Heater.*

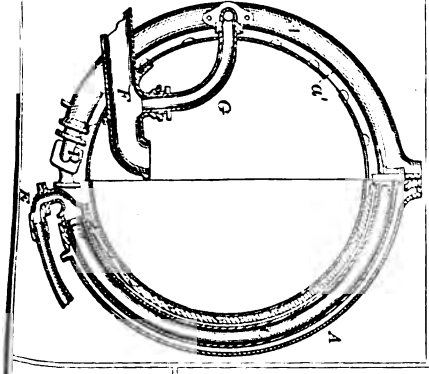

86516—W. H. Elliot—*Hay Spreader.*

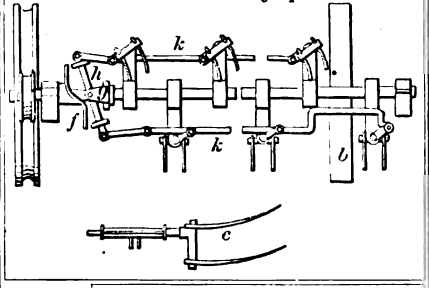

86518—A. Eshelman—*Mill Staff.*

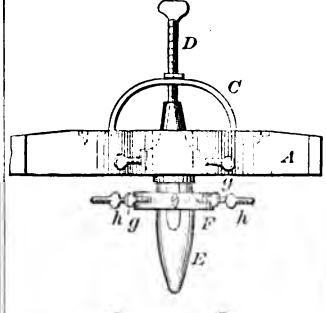

86519—T. Field—*Ice Cream Mould.*

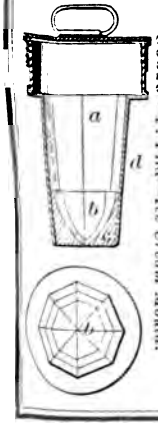

86521—J. Fox—*Shield for Corn in Plowing.*

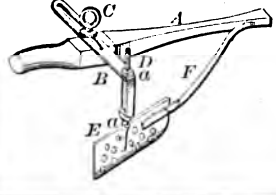

86517—C. R. Ely—*Head Block.*

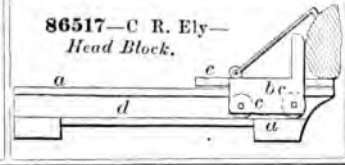

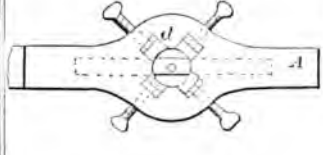

86449—Rank & Cox—*Harvester.*

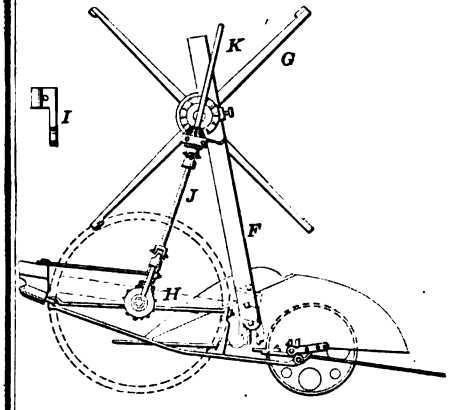

86450—A. Reese—*Horse Shoe Nail Machine.*

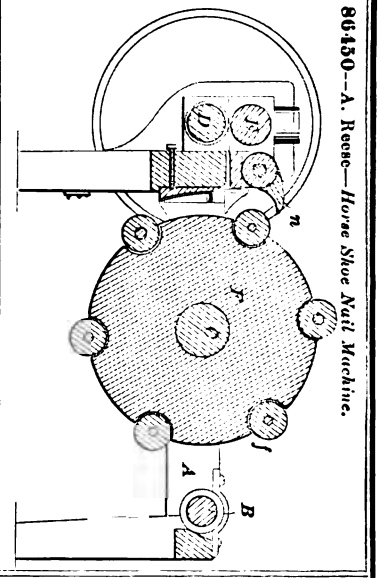

86452—J. Robb—*For Grinding Cards.*

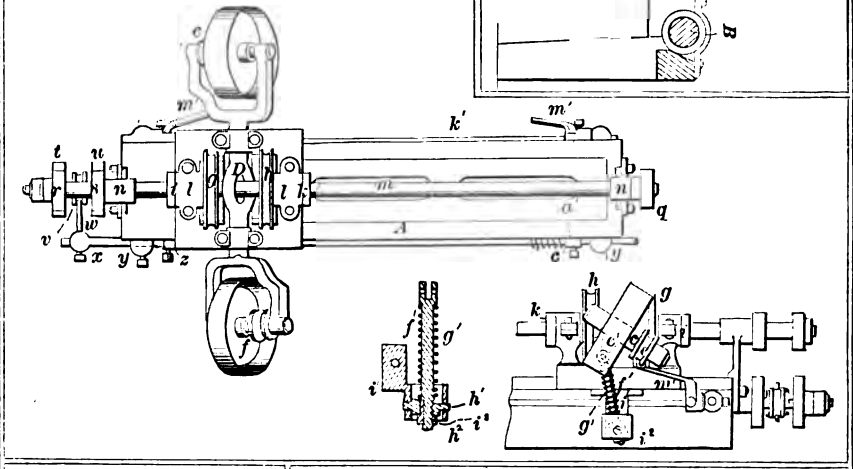

86451—N. Rixford—*Wagon.*

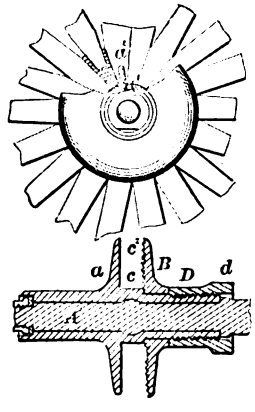

86454—W. A. Robinson—*Bolt for Stove Doors.*

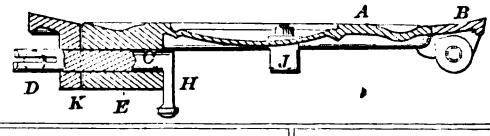

86455—Rogers & Thompson—*Shoeing Device.*

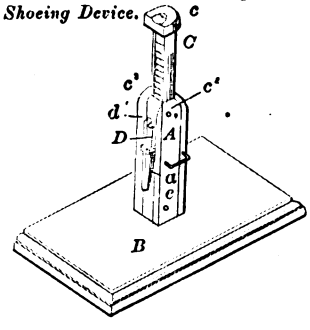

86453—D. A. Robinson, Jr.—*Mucilage Bottle.*

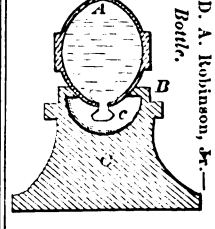

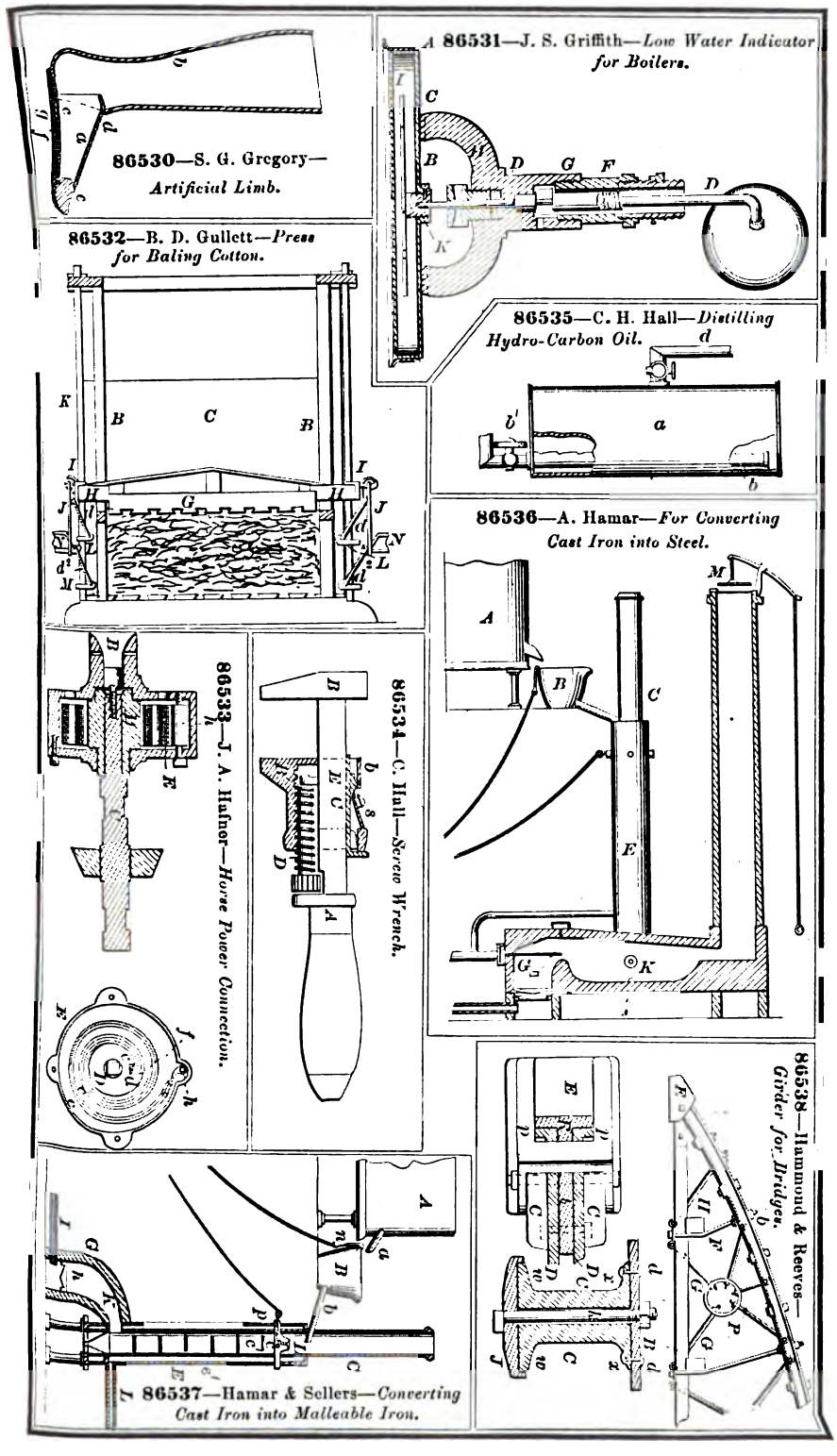

86530—S. G. Gregory—*Artificial Limb.*

86531—J. S. Griffith—*Low Water Indicator for Boilers.*

86532—B. D. Gullett—*Press for Baling Cotton.*

86533—J. A. Hafner—*Horse Power Connection.*

86534—C. Hall—*Screw Wrench.*

86535—C. H. Hall—*Distilling Hydro-Carbon Oil.*

86536—A. Hamar—*For Converting Cast Iron into Steel.*

86537—Hamar & Sellers—*Converting Cast Iron into Malleable Iron.*

86538—Hammond & Reeves—*Girder for Bridges.*

86539—Mrs. E. J. Harding—*Abdominal Supporter.*

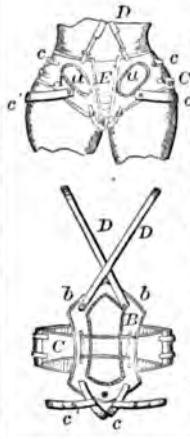

86540—D. Harrigan—*Oil Cup.*

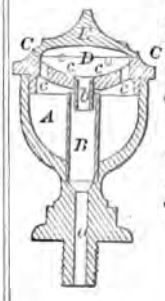

86541—I. A. Heald—*Cigar Machine.*

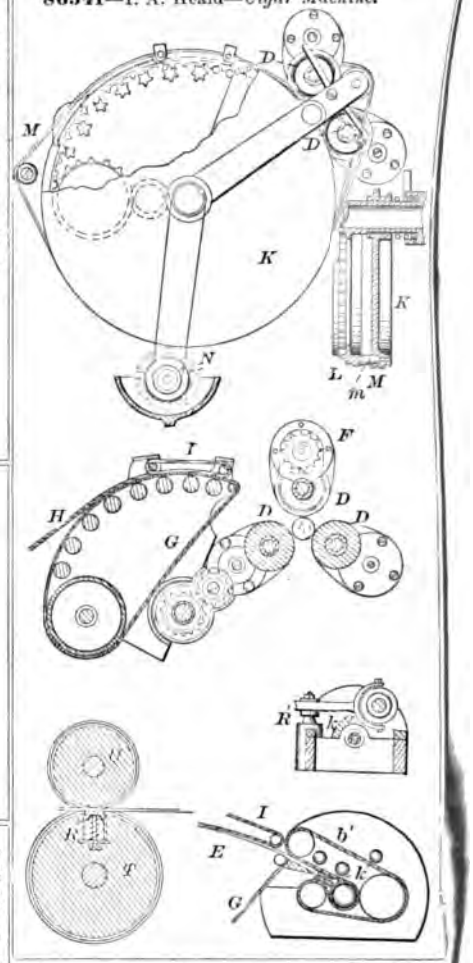

86542—F. Herman—*Carpet Bag Frame.*

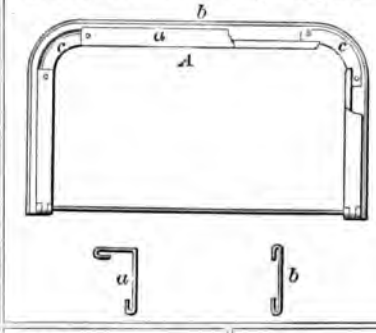

86548—J. H. Irwin—*Lantern.*

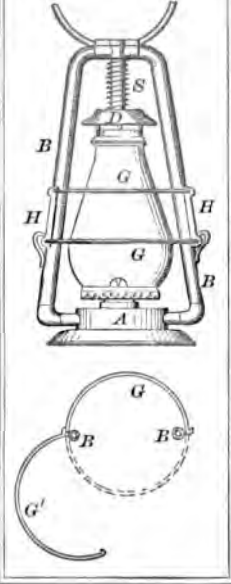

86544—J. C. Howells—*Hair Pin Box.*

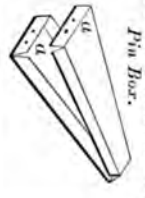

86543—A. Higley—*Axle Box.*

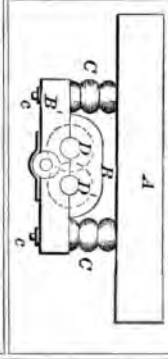

86545—E. N. Huntsman—*Velocipede.*

86549—J. H. Irwin—*Lantern.*

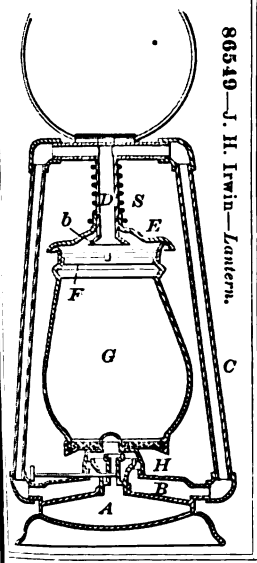

86550—J. P. Jamison—*Tobacco Box.*

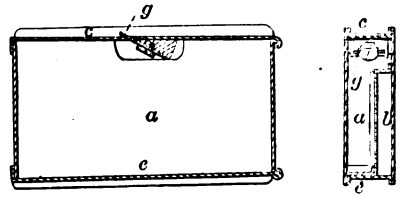

86556—D. Lane—*Water Wheel.*

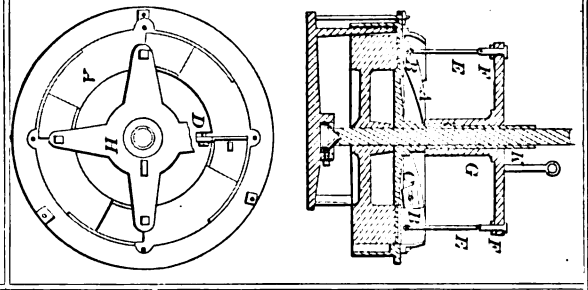

86555—J. J. Koch—*Washing Machine.*

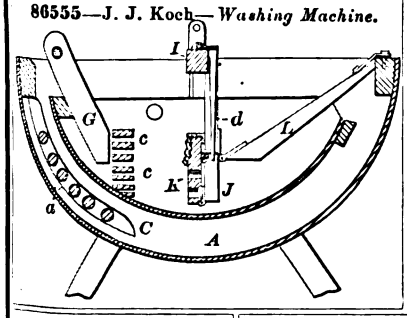

86557—W. O. Leslie—*Brick Machine.*

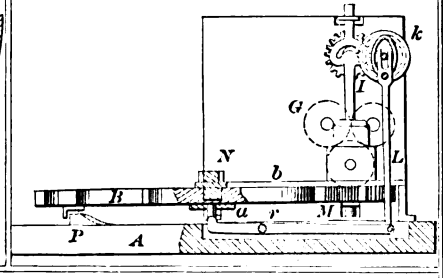

86552—Johnson & Ingersoll—*Blind Fastener.*

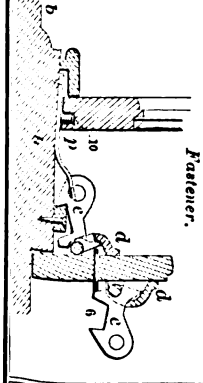

86554—S. Johnston—*Harvester Rake.*

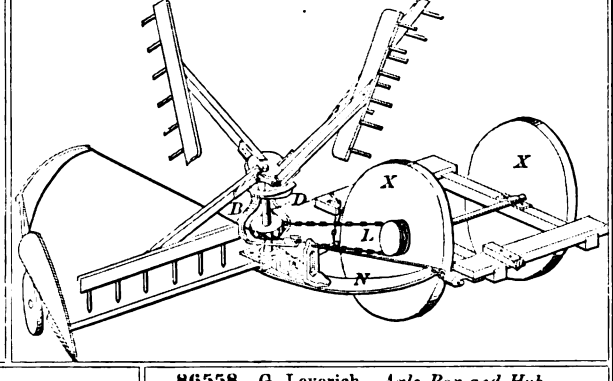

86553—J. Johnson—*Collecting Exudable Products of Pine Trees.*

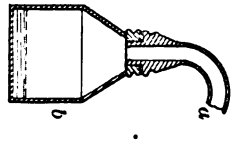

86558—G. Leverich—*Axle Box and Hub.*

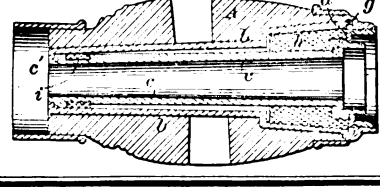

86559—J. L. Linderman—*Seed Sower.*

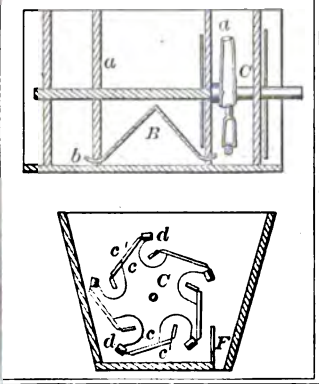

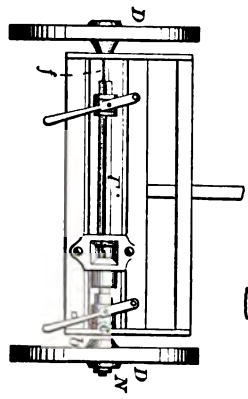

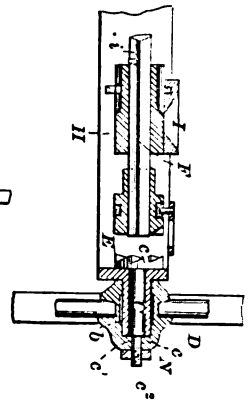

86561—Lowth & Howe—*Seed Sower.*

86560—Locke & Mason—*Lock.*

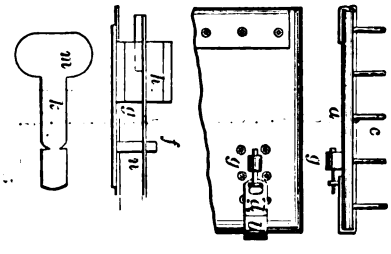

86564—Matteson & Williamson—*Grain Separator.*

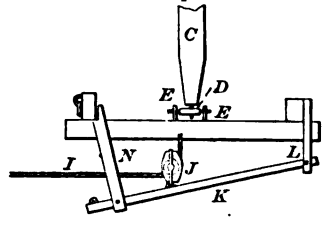

86563—J. N. Matlock—*Seed Sower.*

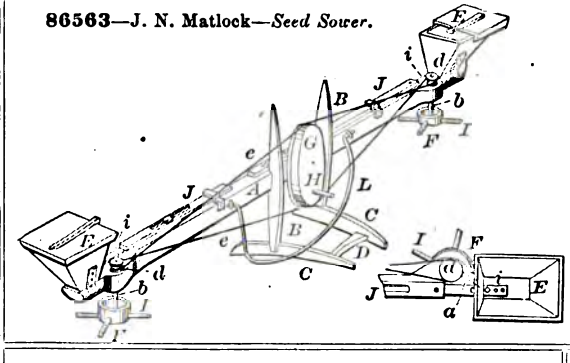

86562—W. I. Ludlow—*Corn Sheller.*

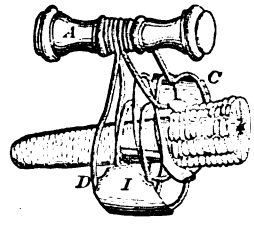

86567—G. W. McCann—*Brick Machine.*

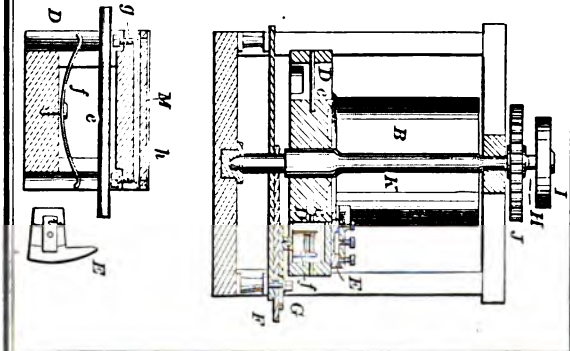

86565—Matteson & Williamson—*Horse Hay Fork.*

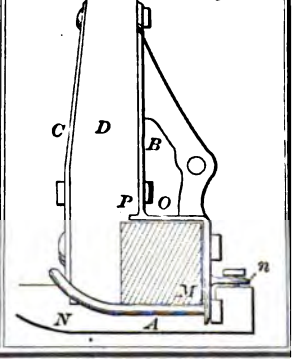

86566—E. Maynard—*Fire Arm.*

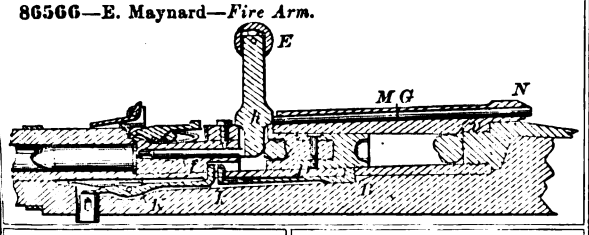

86570—E. J. Meriman—*Corset.*

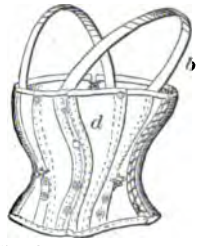

86568—S. A. McGeorge—*Wash Boiler.*

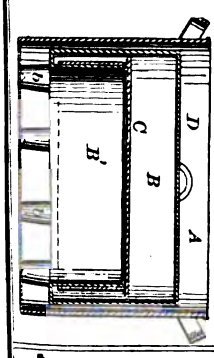

86569—S. D. Meador—*Beehive.*

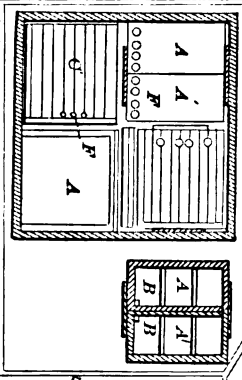

86571—H. Miller—*Sheet Metal Can.*

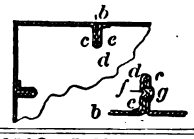

86572—J. Montgomery—*Portable Sectional House.*

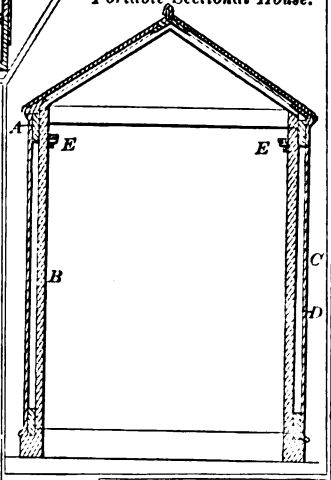

86573—J. A. Morrell—*Velocipede.*

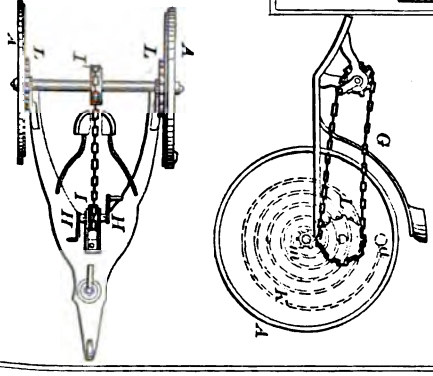

86576—Murphy & Barber—*For Splitting Match Splints.*

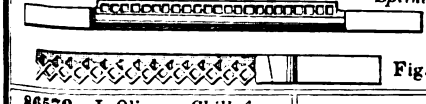

Fig 2

Fig. 3

86577—J. W. Nicholson—*Shovel Plow.*

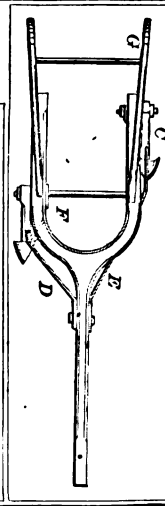

86579—J. Oliver—*Chill for Casting Mould Boards.*

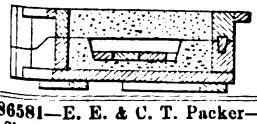

86578—C. Olhaber—*Stove.*

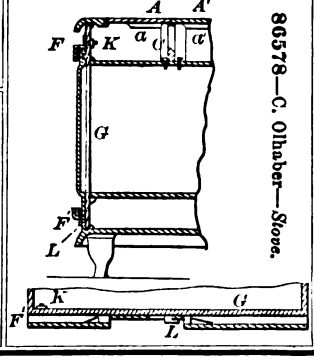

86581—E. E. & C. T. Packer—*Shaft Coupling.*

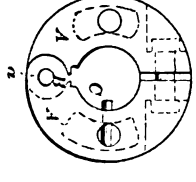

86575—W. Mowry—*Paper Feeding Machine.*

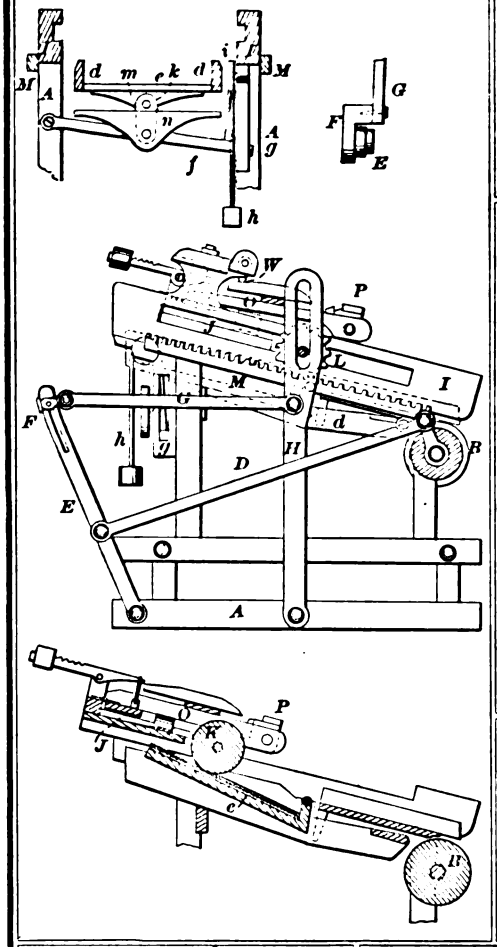

86582—G. Palmer—*Lock Nut.*

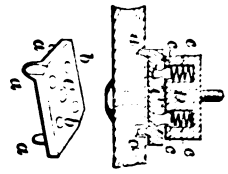

86583—G. Palmer—*Railway Track.*

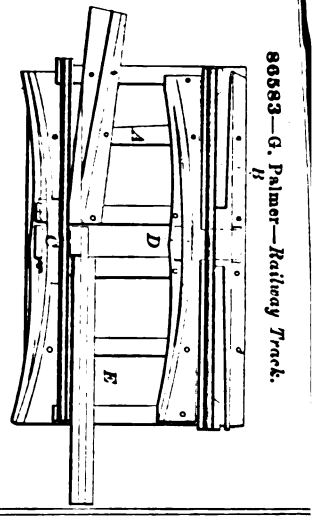

86585—G. H. Phillips—*Store.*

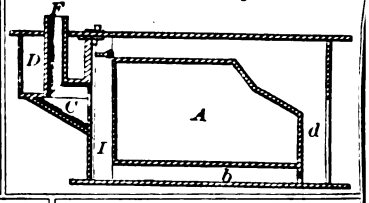

86580—J. D. Otis—*Feed Water for Boilers.*

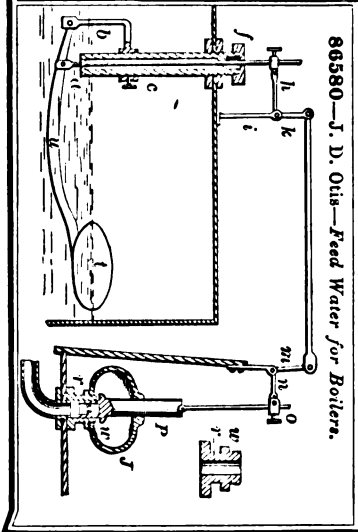

86586—Piper & Allen—*Paint Brush.*

86587—G. Race—*Halter Hitch.*

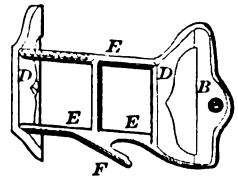

86588—Randall, Moore & Randall—*Shear Boom.*

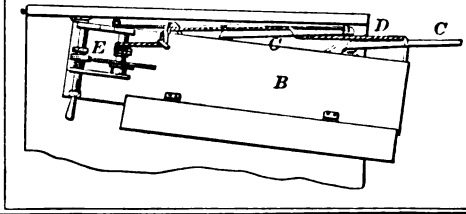

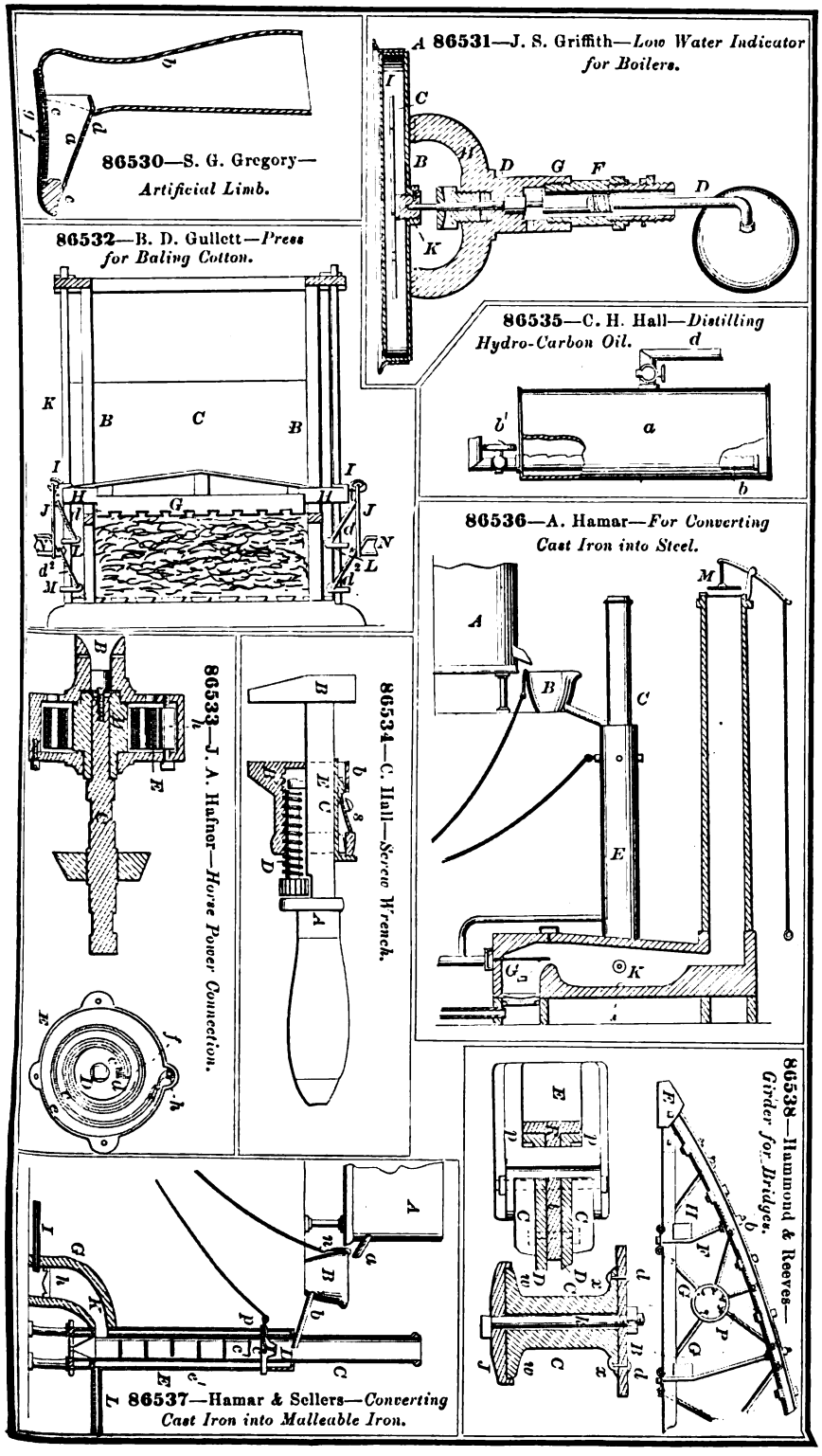

86530—S. G. Gregory—*Artificial Limb.*

86531—J. S. Griffith—*Low Water Indicator for Boilers.*

86532—B. D. Gullett—*Press for Baling Cotton.*

86533—J. A. Hafner—*Horse Power Connection.*

86534—C. Hall—*Screw Wrench.*

86535—C. H. Hall—*Distilling Hydro-Carbon Oil.*

86536—A. Hamar—*For Converting Cast Iron into Steel.*

86537—Hamar & Sellers—*Converting Cast Iron into Malleable Iron.*

86538—Hammond & Reeves—*Girder for Bridges.*

86559—J. L. Linderman—*Seed Sower.*

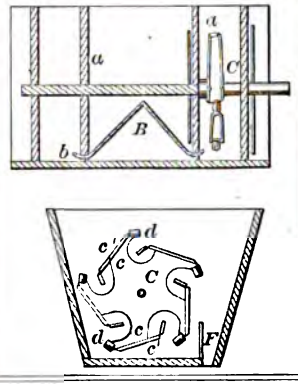

86561—Lowth & Howe—*Seed Sower.*

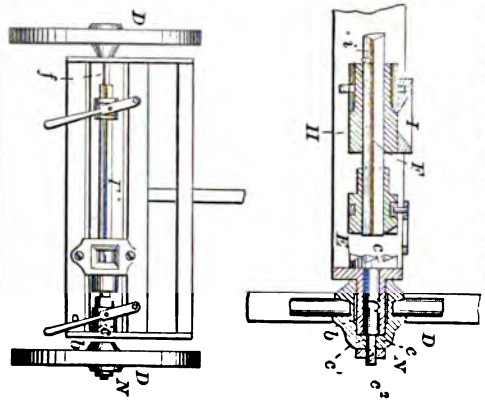

86560—Locke & Mason—*Lock.*

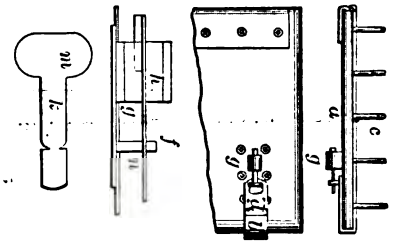

86564—Matteson & Williamson—*Grain Separator.*

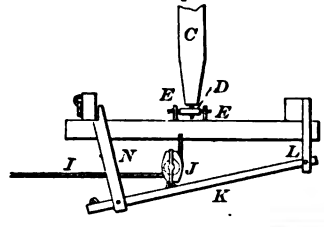

86563—J. N. Matlock—*Seed Sower.*

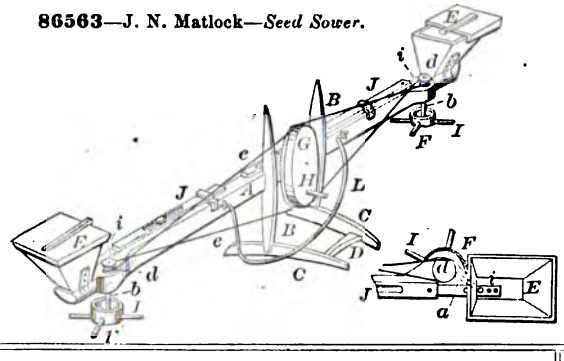

86562—W. I. Ludlow—*Corn Sheller.*

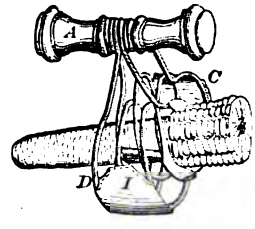

86567—G. W. McCann—*Brick Machine.*

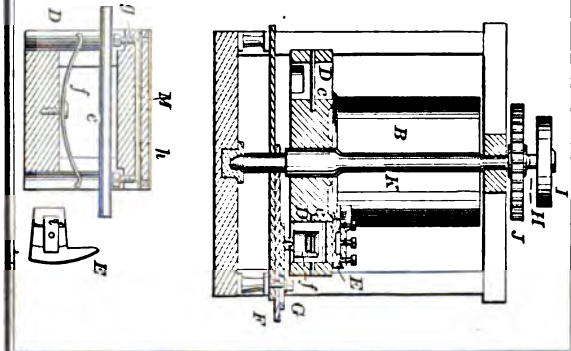

86565—Matteson & Williamson—*Horse Hay Fork.*

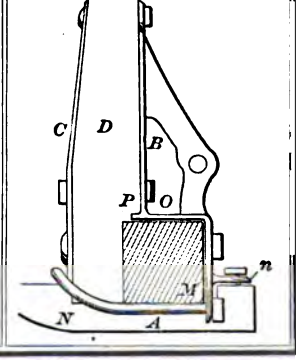

86566—E. Maynard—*Fire Arm.*

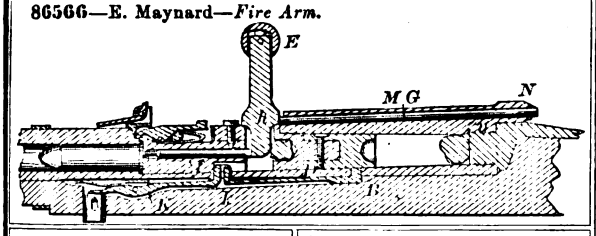

86570—E. J. Meriman—*Corset.*

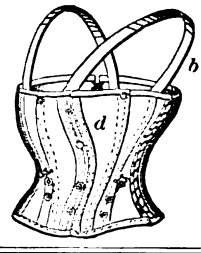

86568—S. A. McGeorge—*Wash Boiler.*

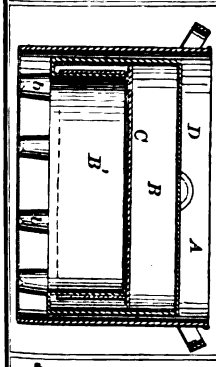

86569—S. D. Meador—*Beehive.*

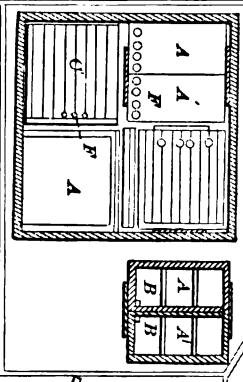

86571—H. Miller—*Sheet Metal Can.*

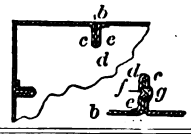

86572—J. Montgomery—*Portable Sectional House.*

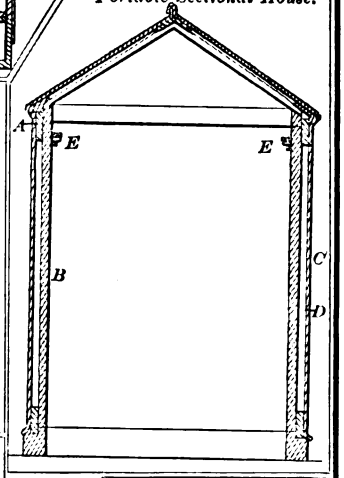

86573—J. A. Morrell—*Velocipede.*

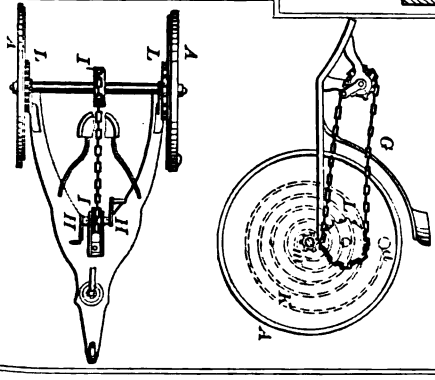

86576—Murphy & Barber—*For Splitting Match Splints.*

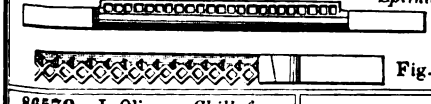

86577—J. W. Nicholson—*Shovel Plow.*

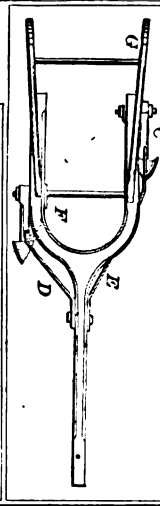

86579—J. Oliver—*Chill for Casting Mould Boards.*

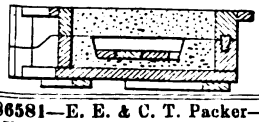

86578—C. Olhaber—*Stove.*

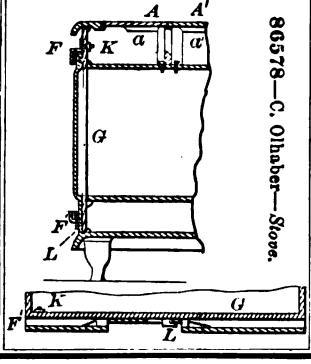

86581—E. E. & C. T. Packer—*Shaft Coupling.*

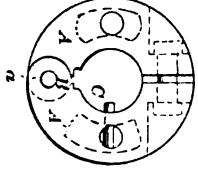

86559—J. L. Linderman—*Seed Sower.*

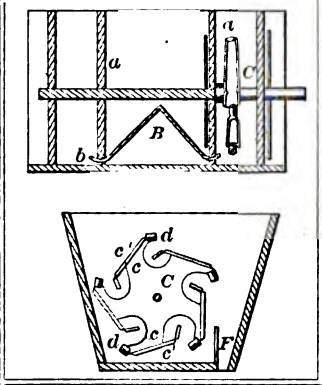

86561—Lowth & Howe—*Seed Sower.*

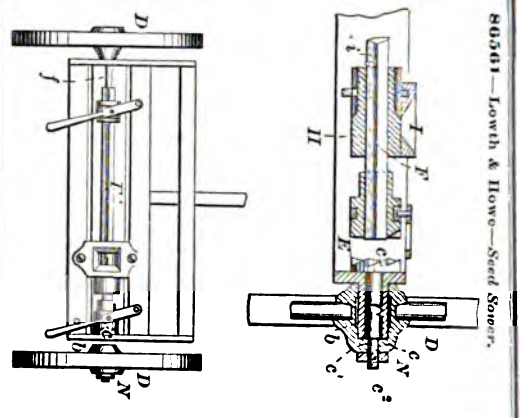

86560—Locke & Mason—*Lock.*

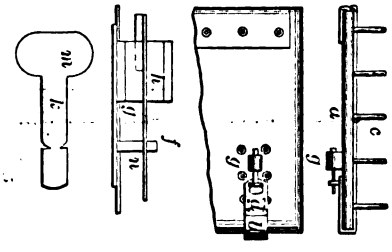

86564—Matteson & Williamson—*Grain Separator.*

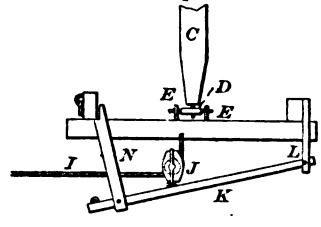

86563—J. N. Matlock—*Seed Sower.*

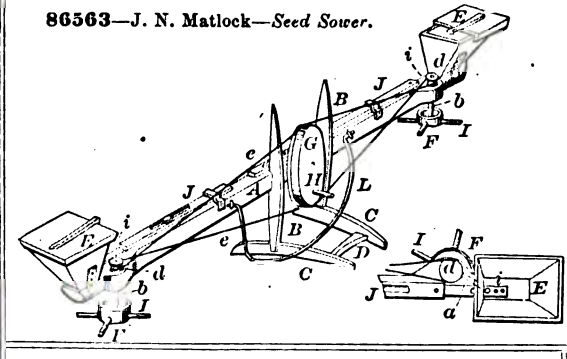

86562—W. I. Ludlow—*Corn Sheller.*

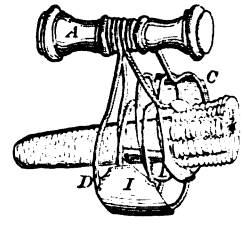

86567—G. W. McCann—*Brick Machine.*

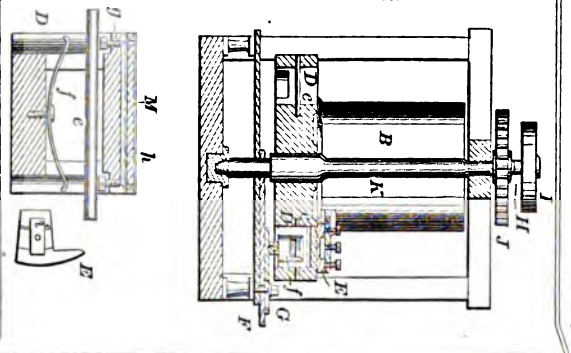

86565—Matteson & Williamson—*Horse Hay Fork.*

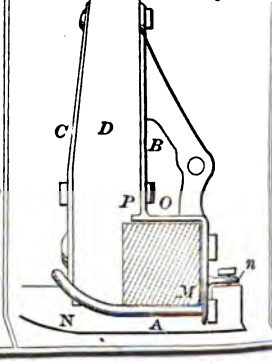

86621—E. Zachariae—*Piano Pedal.*

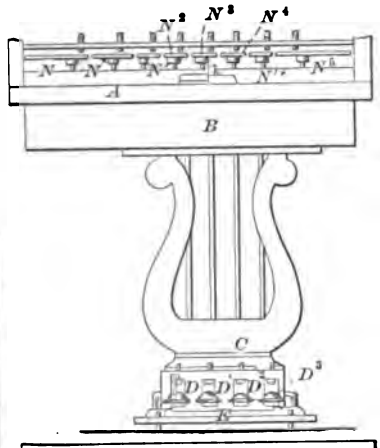

86626—R. H. Atwell—*Can Opener.*

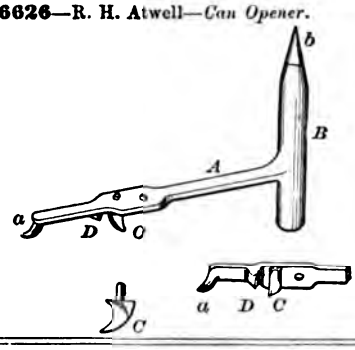

86628—J. M. Barnaby—*Blind Fastener.*

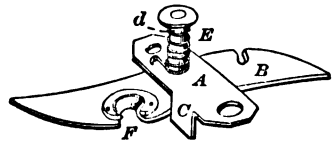

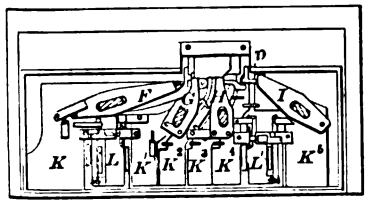

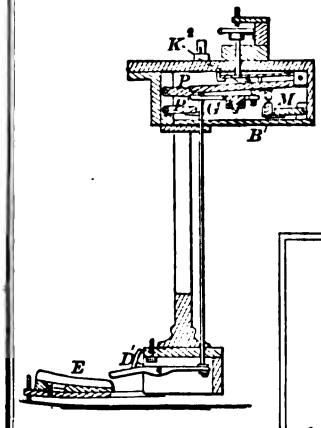

86623—J. R. Abbe—*Cutting Stone.*

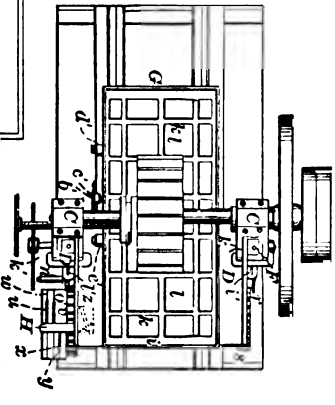

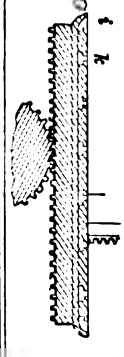

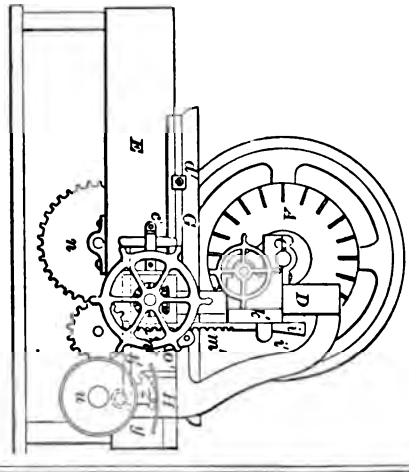

86625—C. E. Ashcroft—*Dryer.*

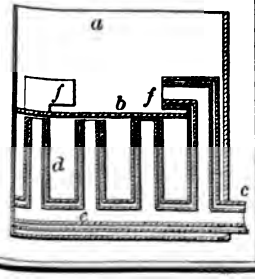

86590—T. K. Reed—*For Uniting the Soles and Uppers of Boots and Shoes.*

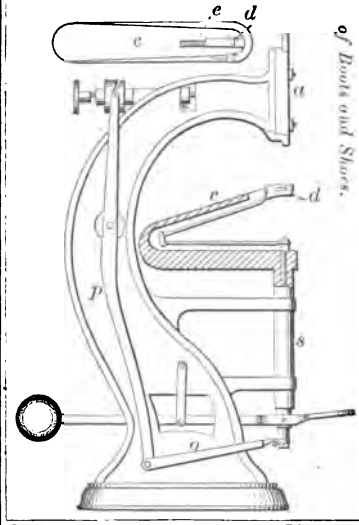

86592—T. K. Reed—*For Forming Stitched Seams.*

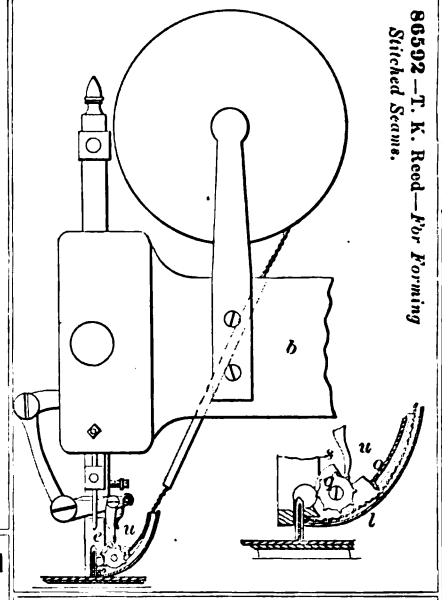

86596—E. Shiver—*For Making Shot.*

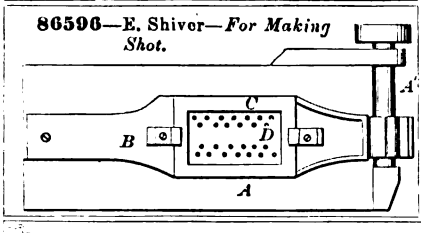

86597—W. H. Sible—*Wrench.*

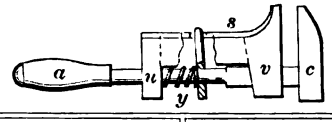

86599—H. W. Southworth—*Mirror and Stand.*

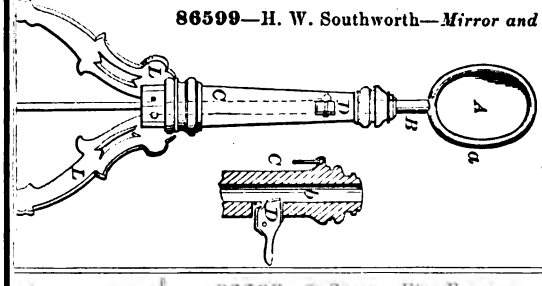

86598—G. Sill—*Swing.*

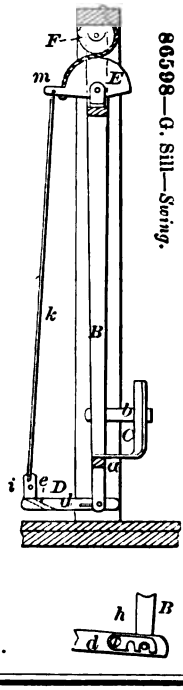

86600—O. Spear—*Fire Escape.*

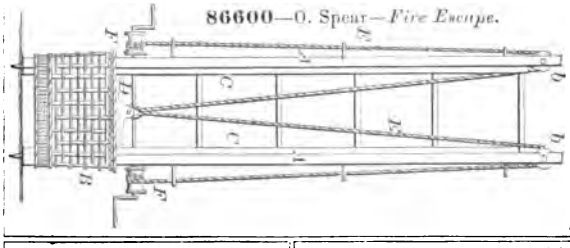

86601—J. W. Still—*Gate Latch.*

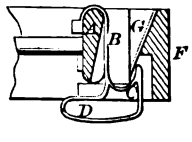

86603—I. P. Tice—*Moulding Machine.*

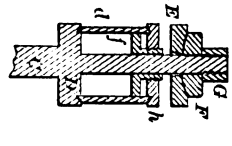

86632—E. E. Bean—*For Sewing Leather.*

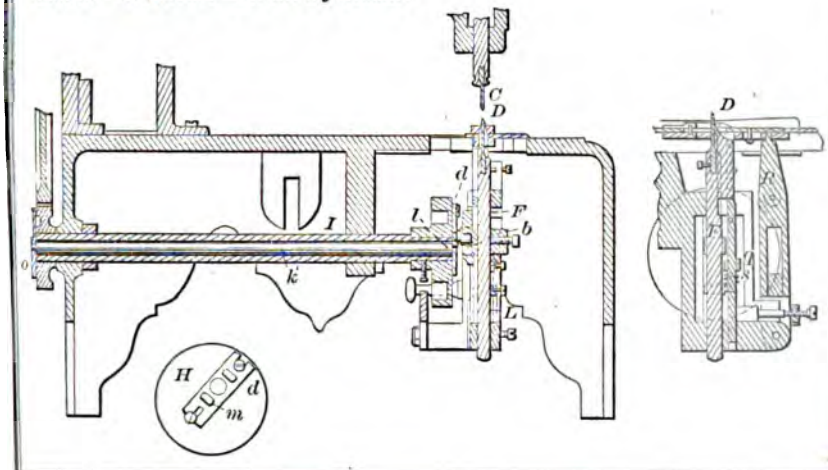

86633—B. D. Berry—*Manufacture of Brick.*

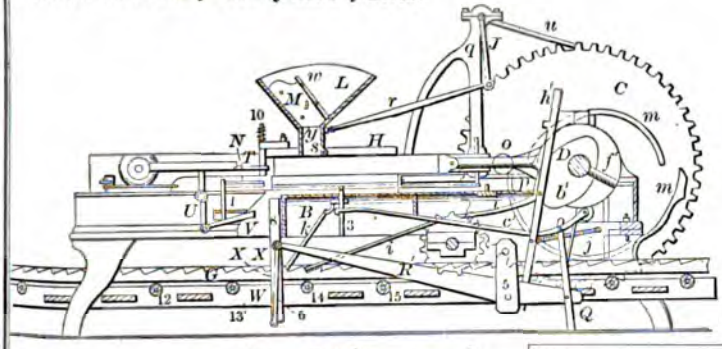

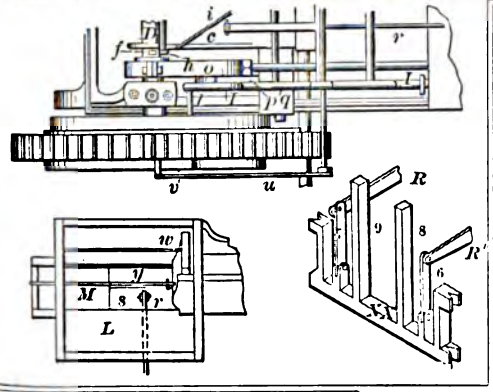

86637—W. L. Bowser—*Blade Case and Attaching Pin.*

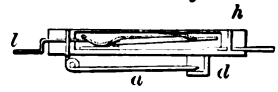

86641—H. & S. W. Budd—*Latch.*

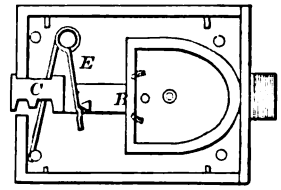

86638—J. P. Brower—*Inhaler for Medical Purposes.*

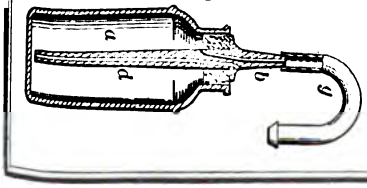

86634—W. H. Betts—*Cord Tightener for Curtains.*

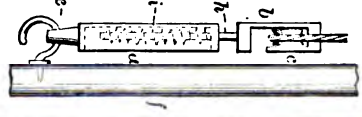

86640—S. C. Bruce—*For Imparting Age to Wine and Spirits.*

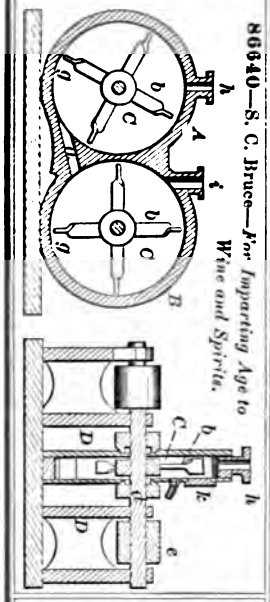

86642—J. D. Butler—*Braiding Machine.*

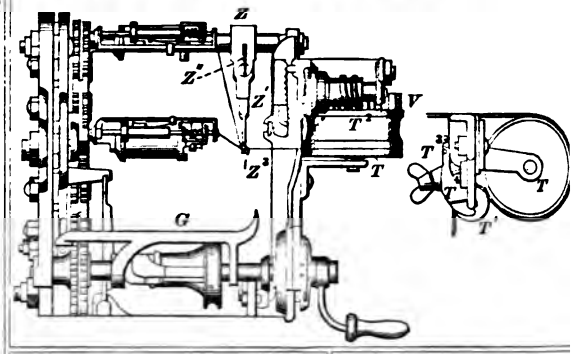

86645—N. Clute—*Pump.*

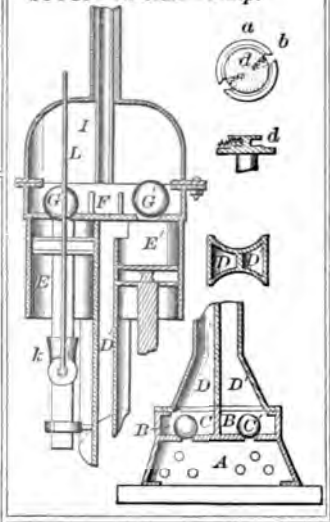

86643—J. A. Cameron—*Beehive.*

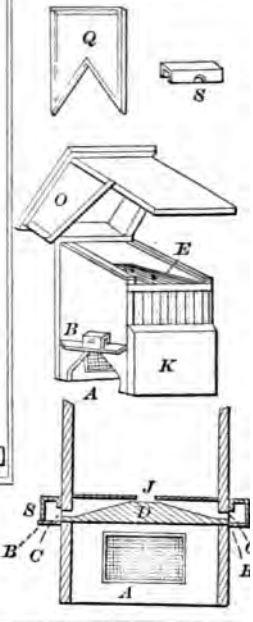

86644—T. J. Close—*Settee Frame.*

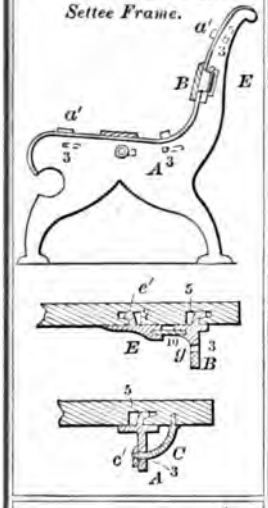

86648—H. Crowell—*Wagon Brake Block.*

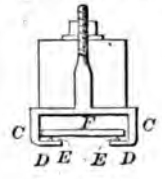

86647—O. Cox—*Needle Threader.*

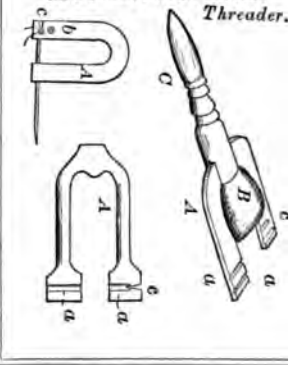

86650—Davis & McGill—*Slide Valve.*

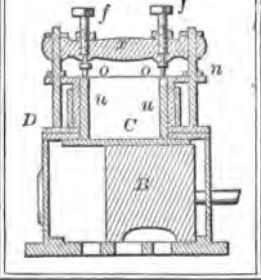

86652—J. Davis—*Hose.*

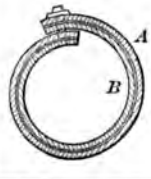

86651—E. K. Davis—*Loom.*

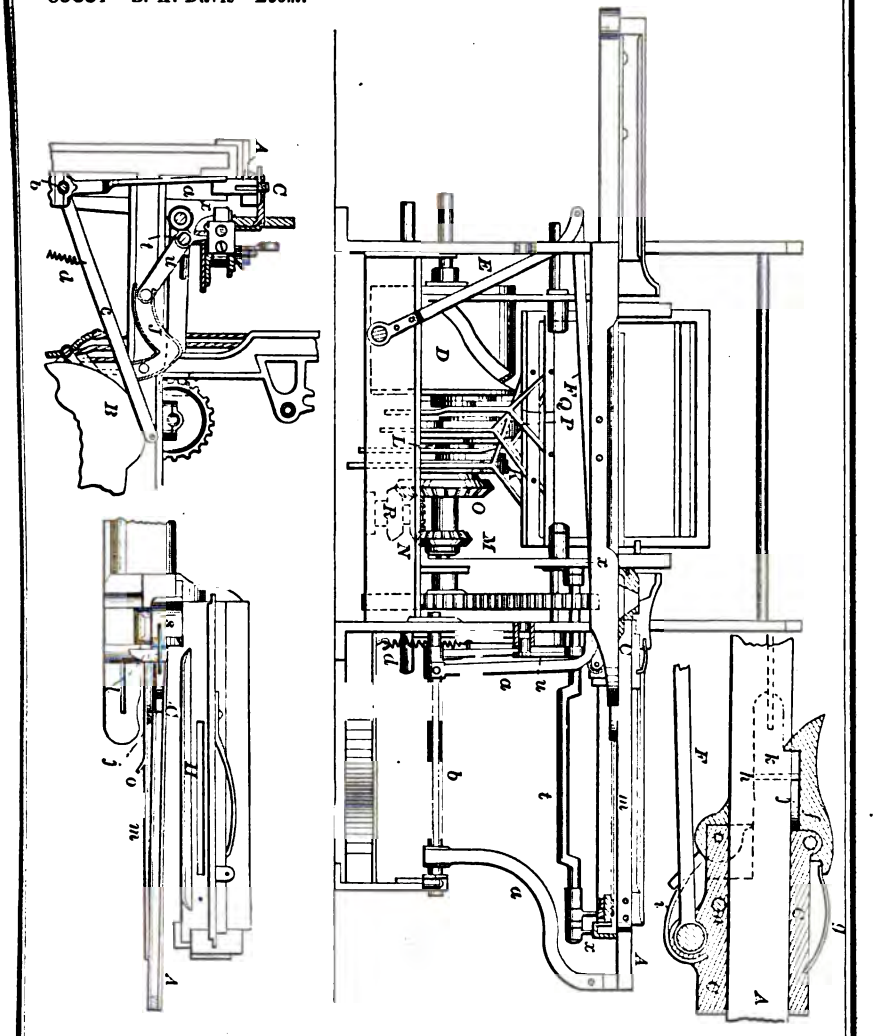

86654—W. Dobbins—*Steam Press.*

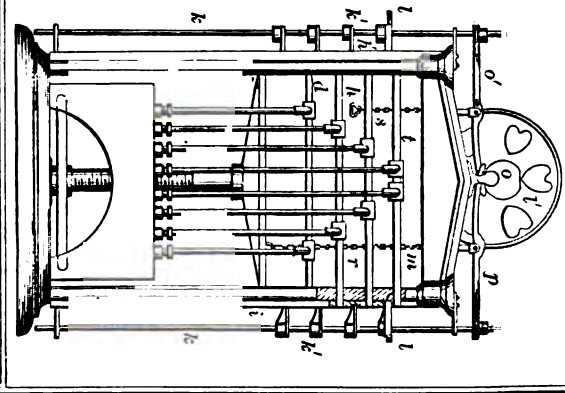

86655—J. W. Dryer—*Mould for Casting Sleigh Shoes.*

86653—A. D. Ditmars—*Razor Strop.*

86656—Eberly, Lutz & Becker—*Horse Power.*

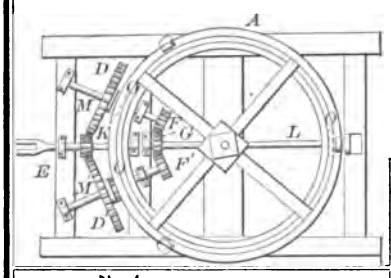

86657—J. O. Ely—*Knife.*

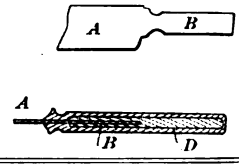

86658—J. B. Farmer—*Gate Hinge.*

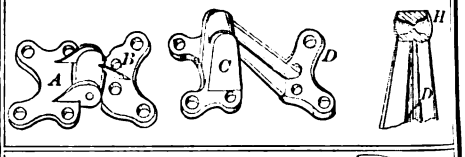

86662—Grace & Elliott—*For Preventing Horses from Kicking.*

86663—W. C. Grimes—*Ventilating Houses, Halls, &c.*

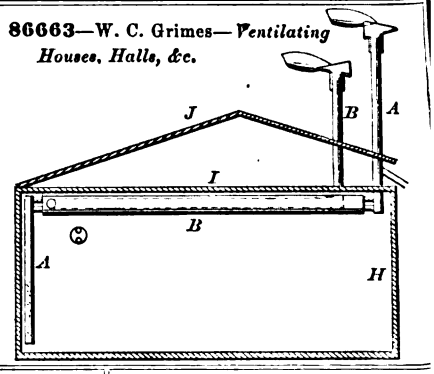

86659—G. Gibbs—*Wagon Brake.*

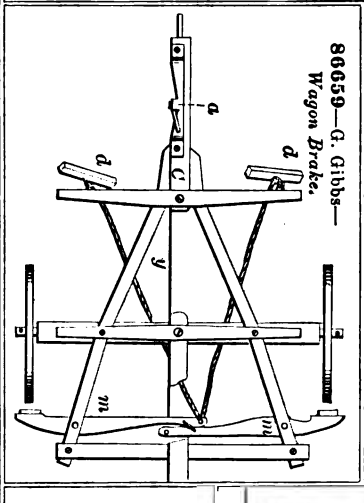

86660—W. T. Gilliander—*Lamp Chimney.*

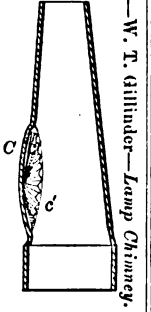

86661—B. F. Gladding—*Horse Hay Fork.*

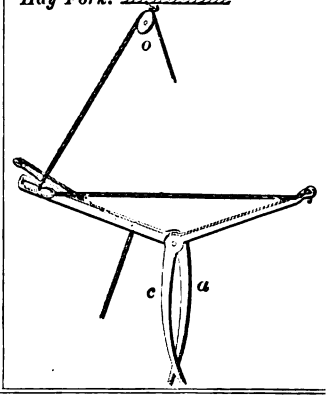

86664—J. Grimm—*Brick.*

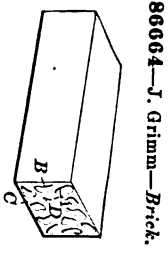

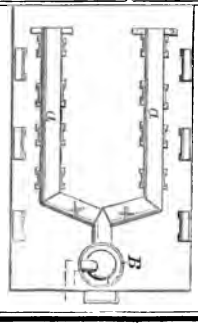

86666—A. E. Harding—*For Drying Paper.*

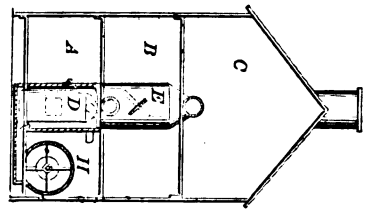

86665—A. M. Gurley—*Clothes Dryer.*

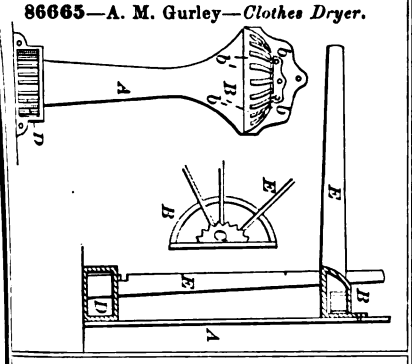

86668—W. A. Hastings—*Shuttle Guide for Looms.*

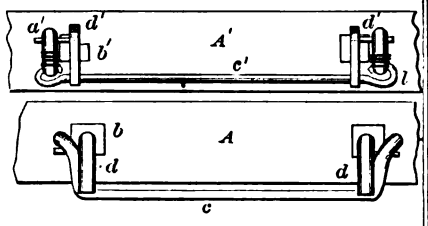

86669—Hetzel & Hager—*Meat Cutter.*

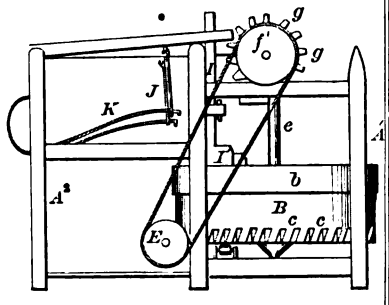

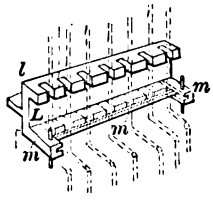

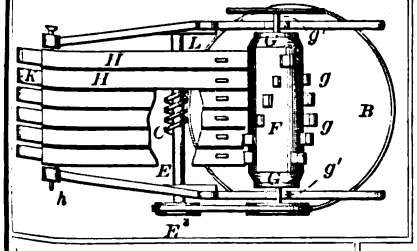

86667—A. T. Harrison—*Torch and Fire Kindler.*

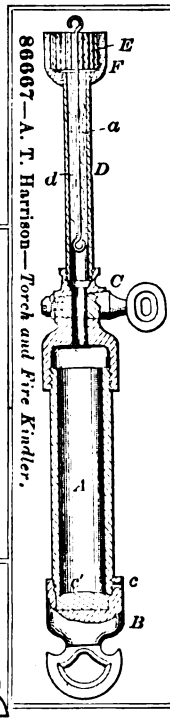

86670—G. G. Hickman—*Inkstand.*

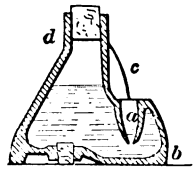

86673—H. R. Howe—*Car Coupling.*

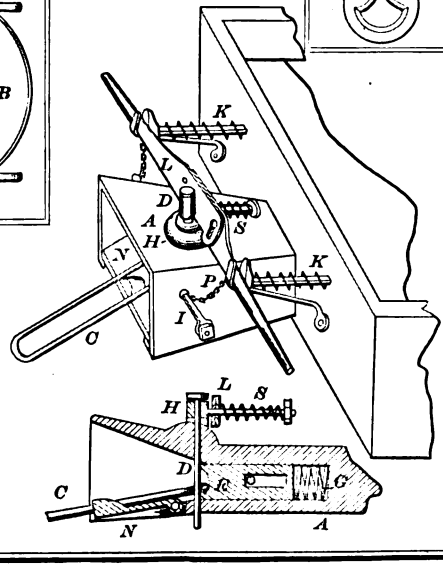

86671—M. Holdener—*Stove.*

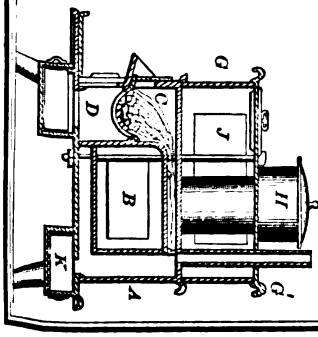

86624—Akley & Coggeshall—*Railway Signal.*

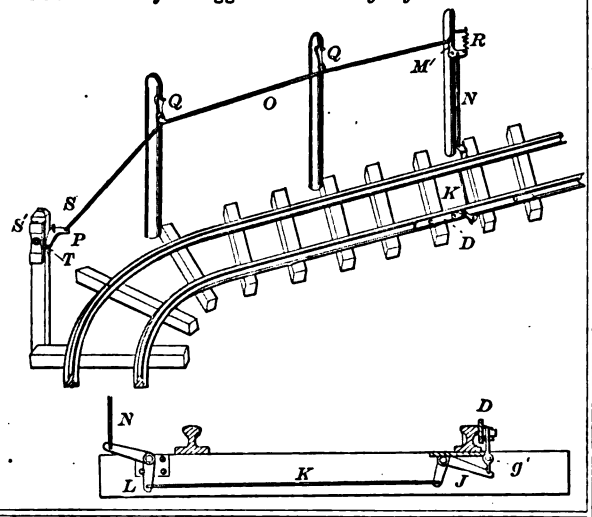

86627—Q. S. Backus—*For Attaching Labels to Spools.*

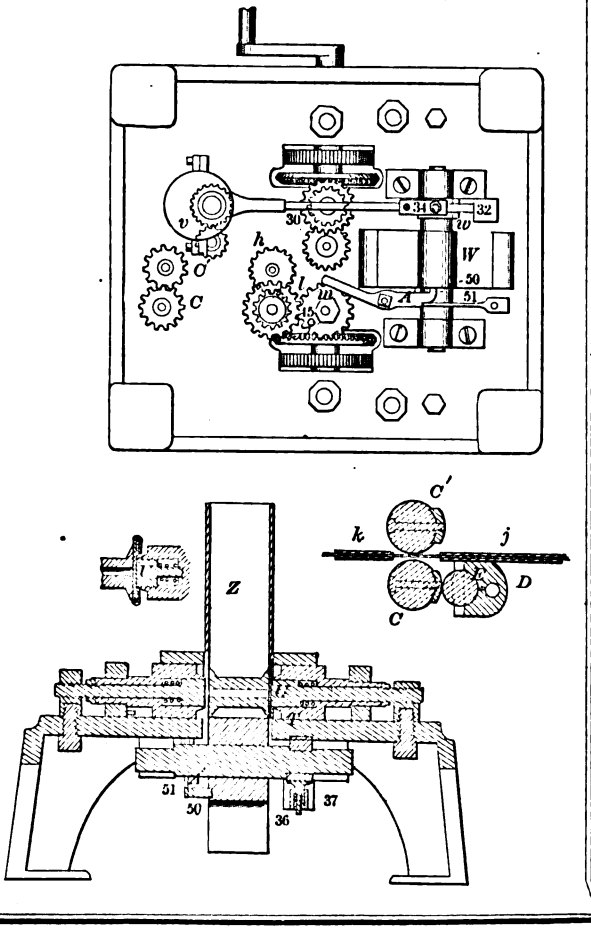

86629—A. E. Barnard—*Die for Bending Equalizing Bars.*

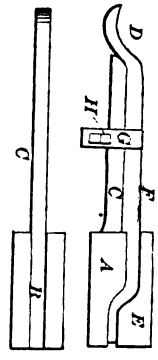

86630—E. Basoom—*For Opening and Closing Window Blinds.*

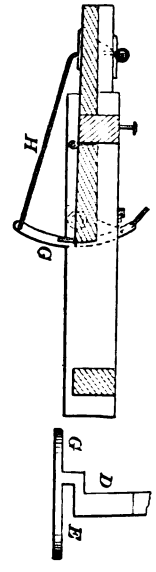

86631—V. D. Beach—*Railway Curve.*

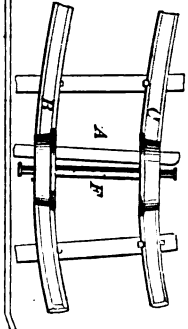

86680—C. K. Marshall—*Newspaper Addressing Machine.*

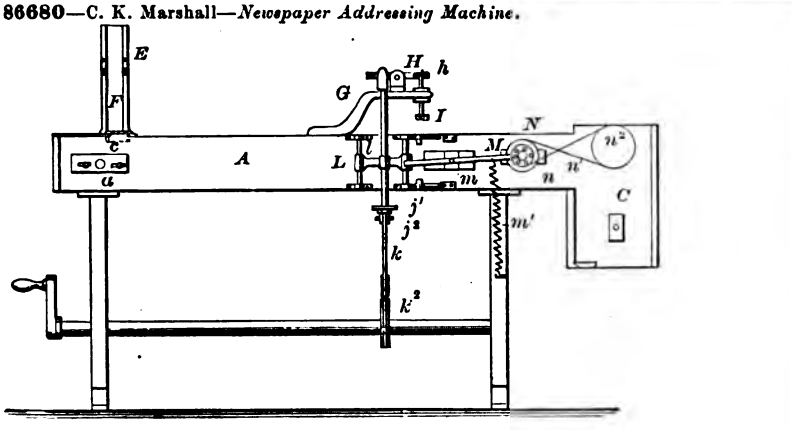

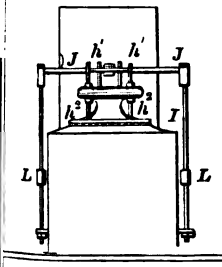

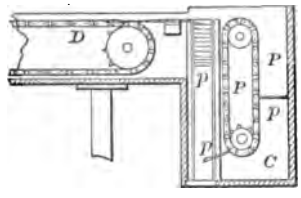

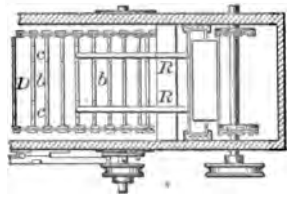

86684—W. Ostermeyer—*Threshing Machine Feeder.*

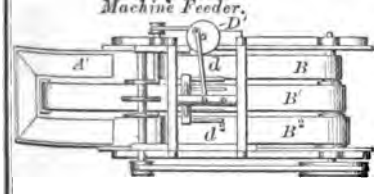

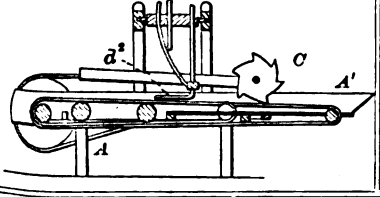

86687—A. W. Powers—*Grain Separator.*

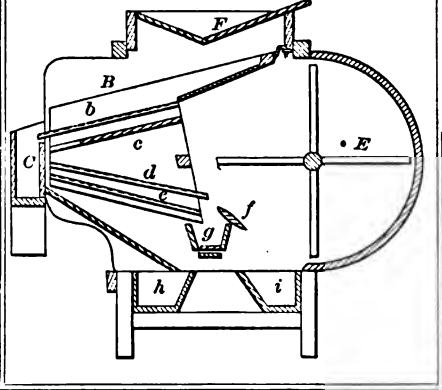

86686—J. H. Petersen—*Shutter Fastener.*

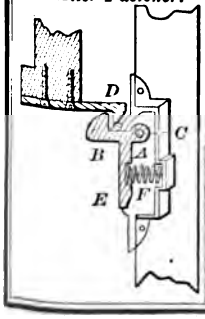

86688—E. Prentice—*Shuttle Binder for Looms.*

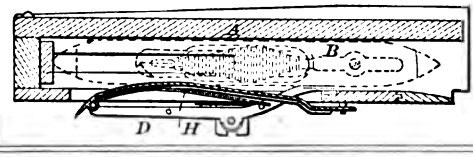

86689—A. H. Read—*Window Sash Supporter.*

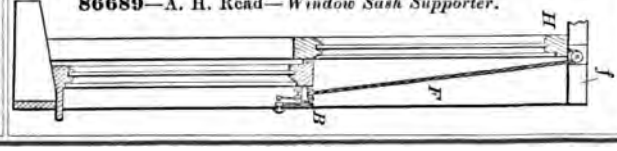

86685—J. R., D. W. & J. Perry—*Railroad Car.*

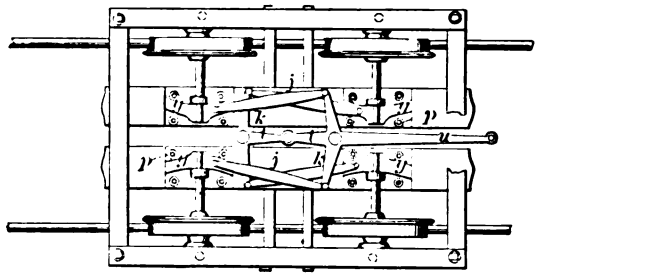

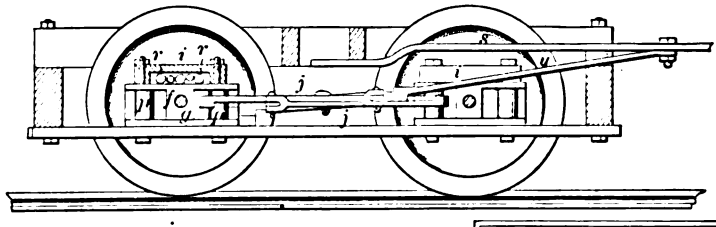

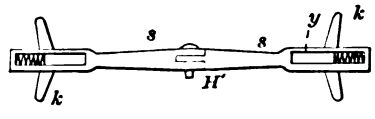

86692—E O. Rood—*Mechanical Movement.*

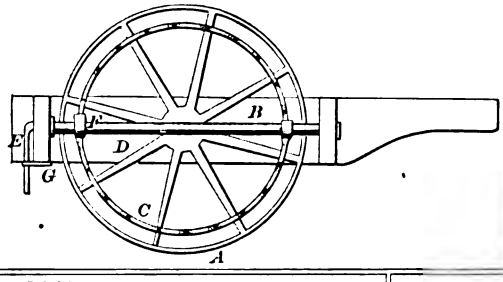

86691—E. A. L. Roberts—*Torpedo.*

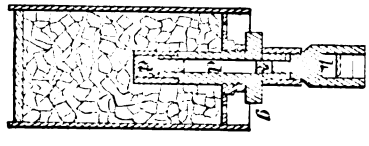

86694—D. E. Rugg—*Lamp Burner.*

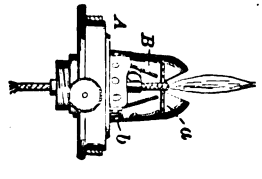

86690—S. Remington—*Fire Arm.*

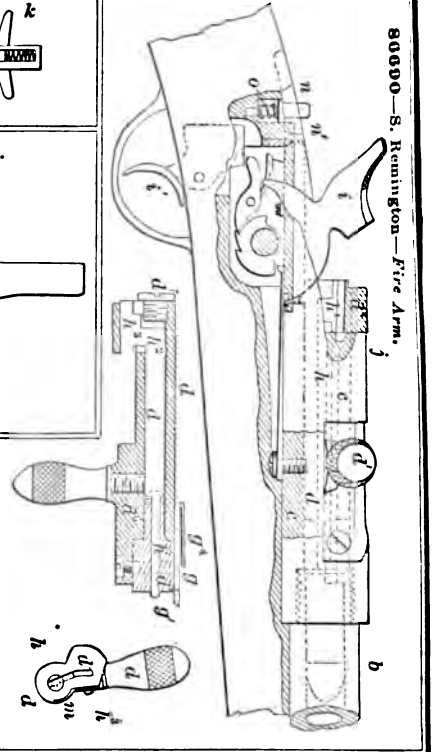

86693—J. A. C. Ruffner—*Carriage Axle.*

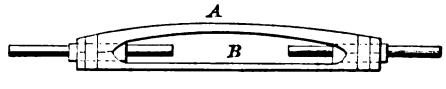

86695—W. W. Russell—*For Sewing Leather.*

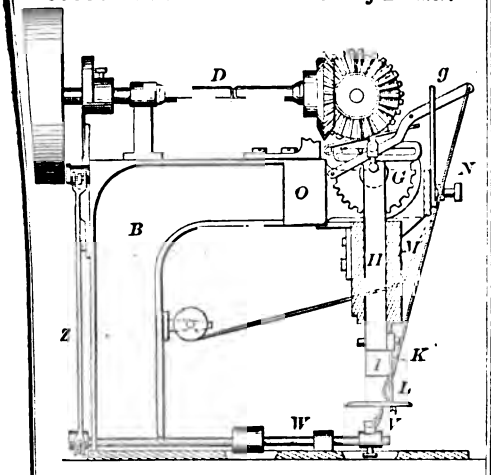

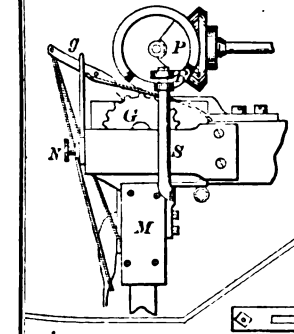

86697—Saladee & Bauder—*Top Iron and Prop for Carriages.*

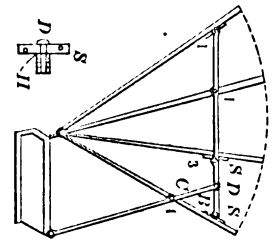

86699—P. I. Schopp—*For Supporting Skaters and Invalids.*

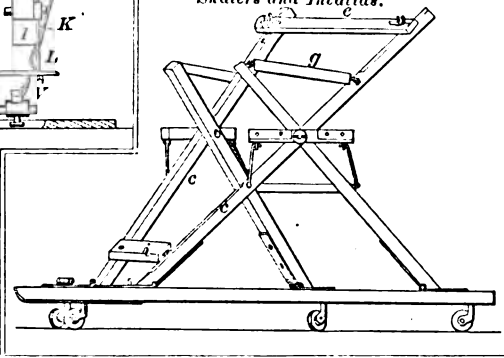

86704—J. S. Smith—*Cotton Scraper.*

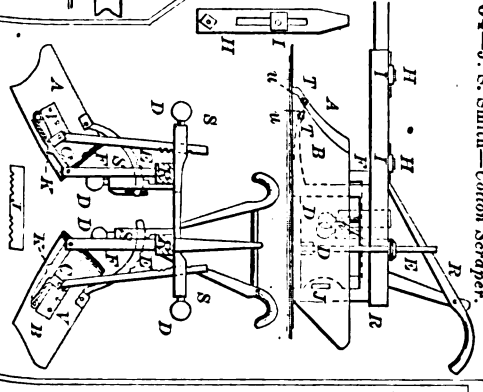

86700—E. W. Scott—*Liquid Measuring and Registering Faucet.*

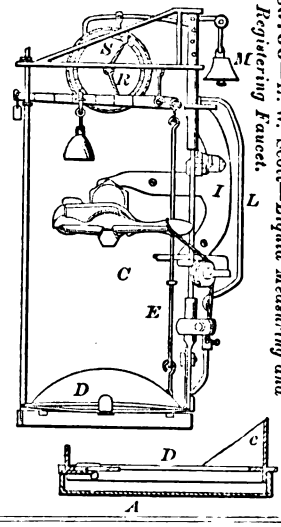

86698—W. B. Sawyer—*Slop Pail Lid.*

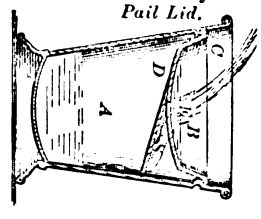

86696—Saladee & Bauder—*Top Iron and Prop for Carriages.*

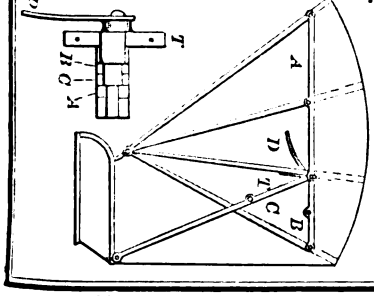

86656—Eberly, Lutz & Becker—*Horse Power.*

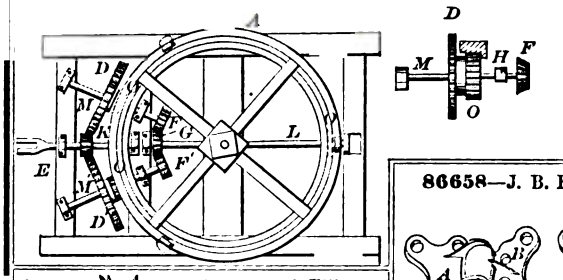

86657—J. O. Ely—*Knife.*

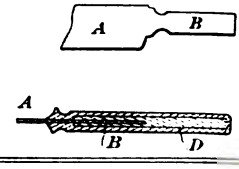

86658—J. B. Farmer—*Gate Hinge.*

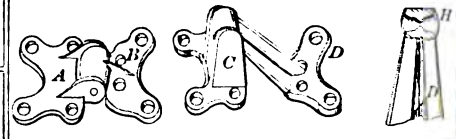

86662—Grace & Elliott—*For Preventing Horses from Kicking.*

86663—W. C. Grimes—*Ventilating Houses, Halls, &c.*

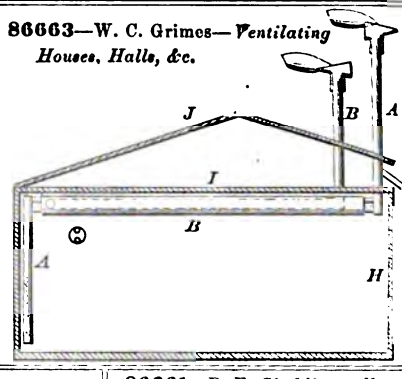

86659—G. Gibbs—*Wagon Brake.*

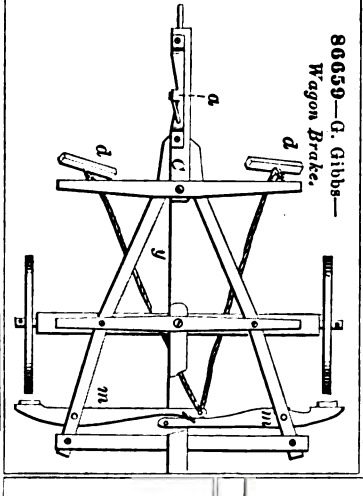

86660—W. T. Gillinder—*Lamp Chimney.*

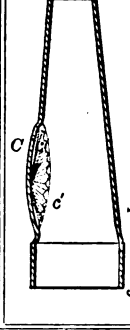

86661—B. F. Gladding—*Horse Hay Fork.*

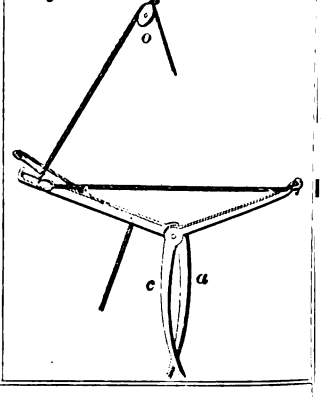

86664—J. Grimm—*Brick.*

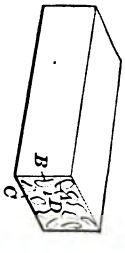

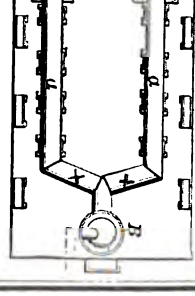

86666—A. E. Harding—*For Drying Paper.*

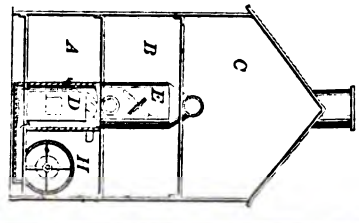

86712—Tirrell & Brett—*Paper File.*

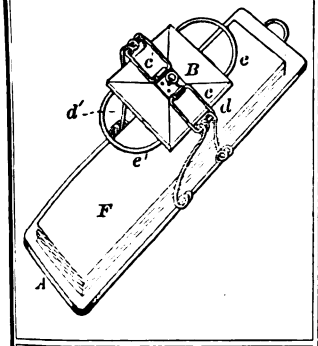

86717—M. N. Ward—*Horse Rake.*

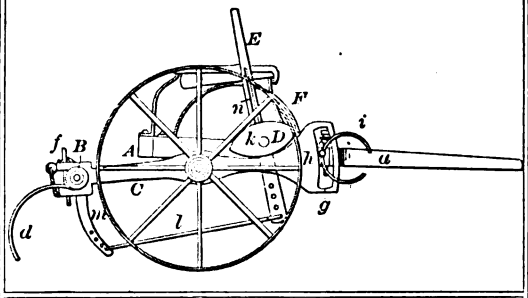

86713—S. Trent—*Volute Spring.*

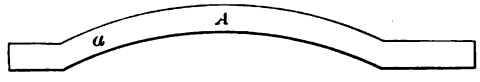

86716—H. Uhry—*Stair Rod.*

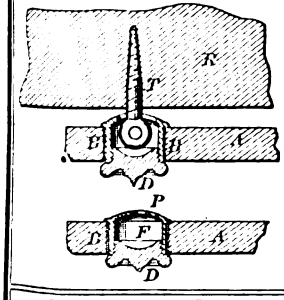

86715—H. Uhry—*Stair Rod.*

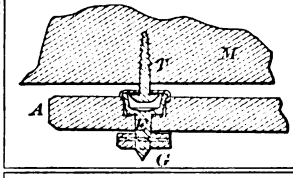

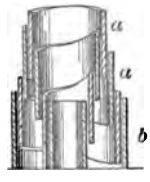

86720—G. R. Wilson—*Gun Carriage.*

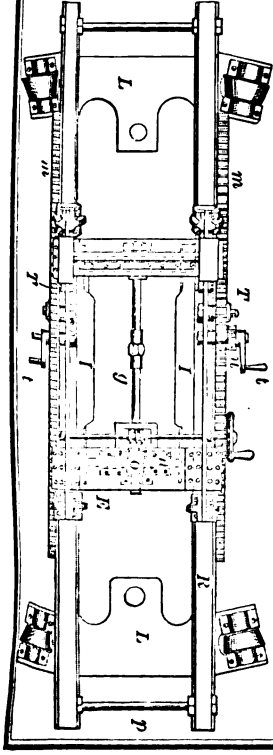

86718—N. S. Warner—*Toy Row Boat.*

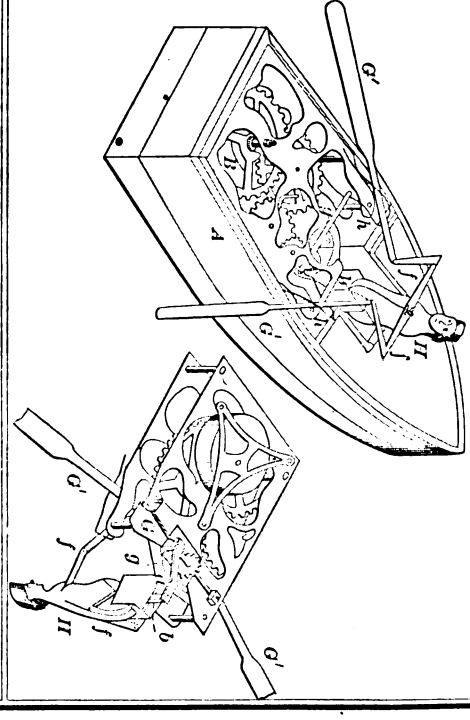

86719—S. J. Whitton—*Regulator for Drawing Frames.*

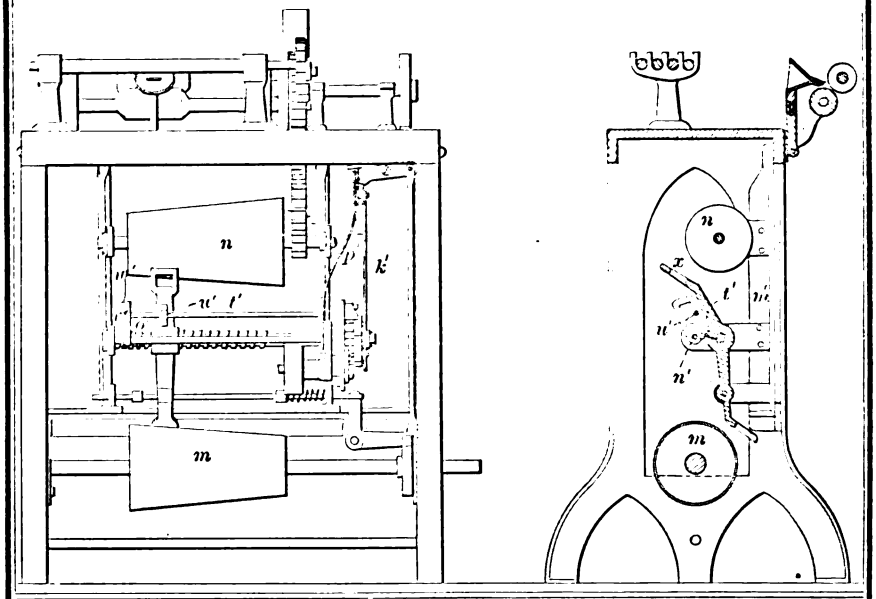

86721—J. Alcorn—*Bottle Filling Machine.*

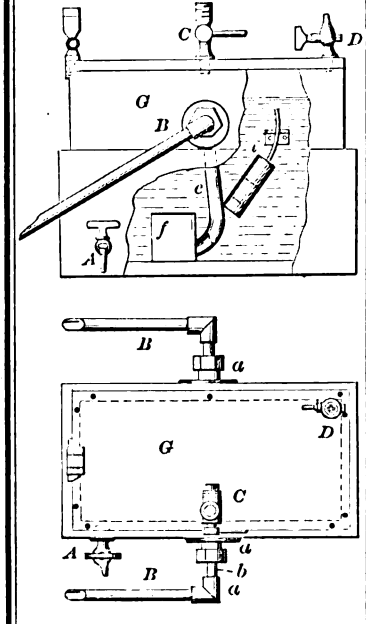

86722—A. C. Armengol—*Finger Exercising Apparatus.*

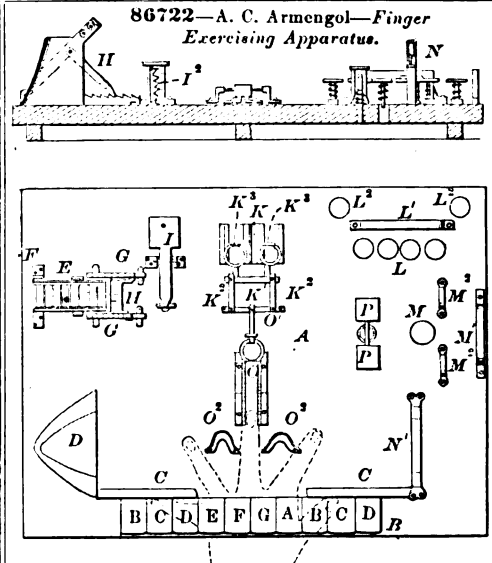

86725—R. D. Bogert—*Uterine Supporter.*

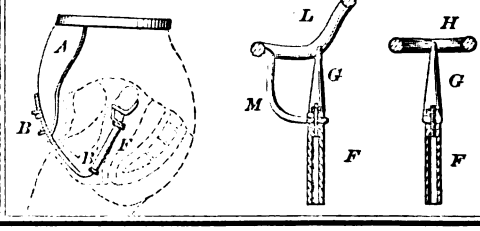

86726—E. Bourne—*Rivet.*

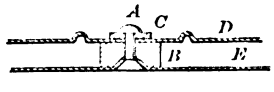

86695—W. W. Russell—*For Sewing Leather.*

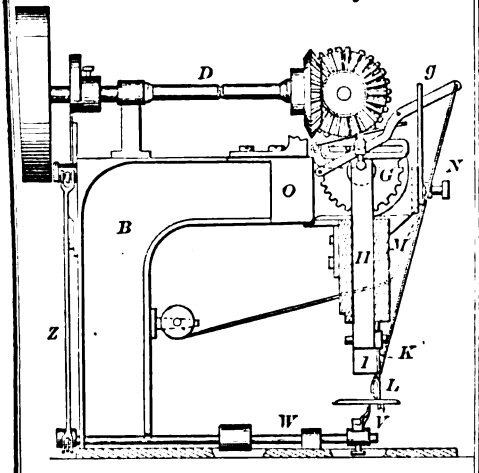

86697—Saladee & Bauder—*Top Iron and Prop for Carriages.*

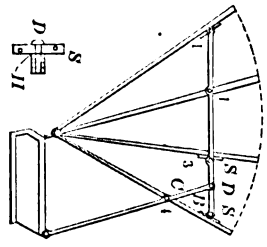

86699—P. I. Schopp—*For Supporting Skaters and Invalids.*

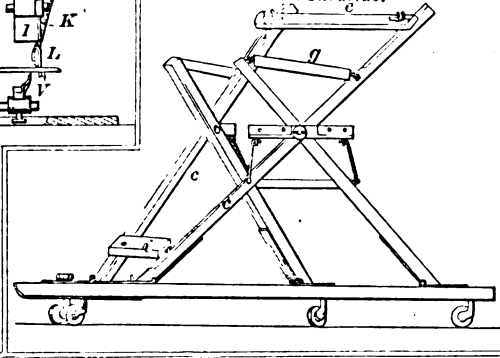

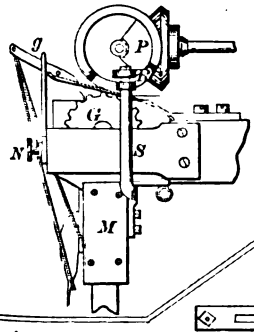

86704—J. S. Smith—*Cotton Scraper.*

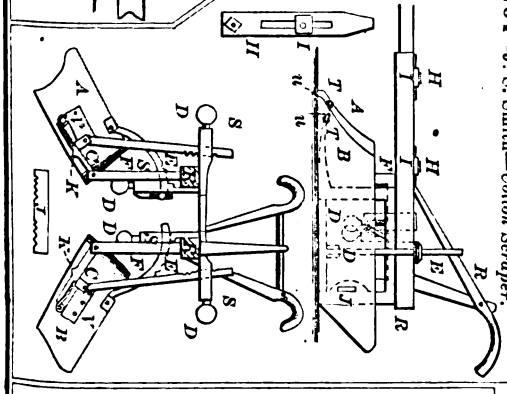

86700—E. W. Scott—*Liquid Measuring and Registering Faucet.*

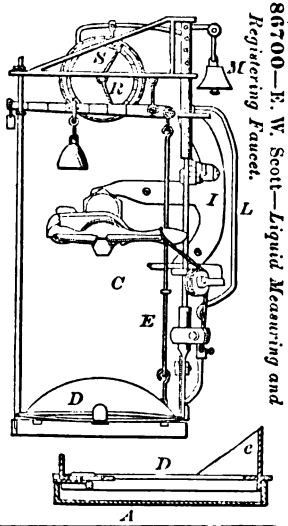

86696—Saladee & Bauder—*Top Iron and Prop for Carriages.*

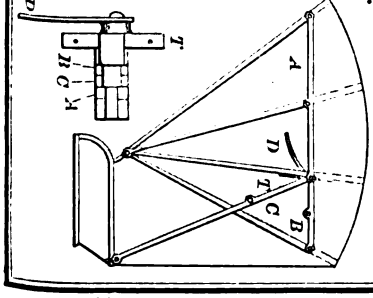

86698—W. B. Sawyer—*Slop Pail Lid.*

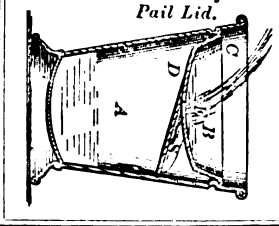

86732—P Clark—*Brick Machine.*

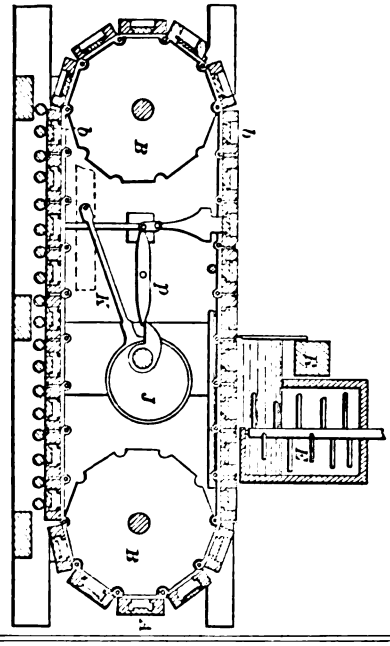

86735—G. Crompton—*Stopping Mechanism for Looms.*

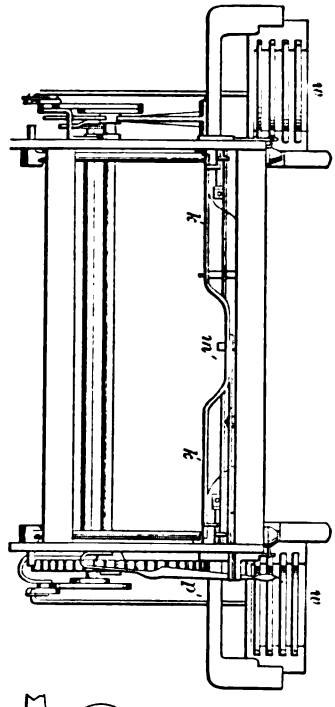

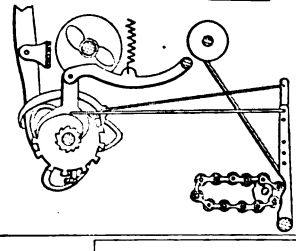

86738—W. Denovan—*Velocipede.*

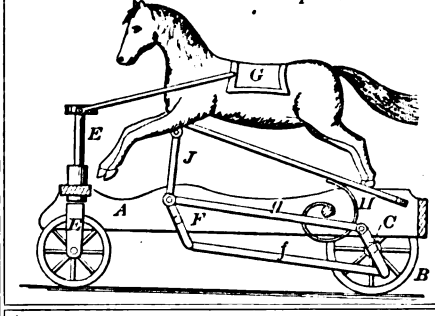

86742—F. Fischbeck—*Shield for Traveling Bags.*

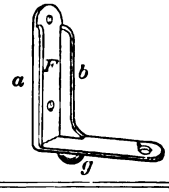

86736—J. E. Daniels—*Sheep Shearing Table.*

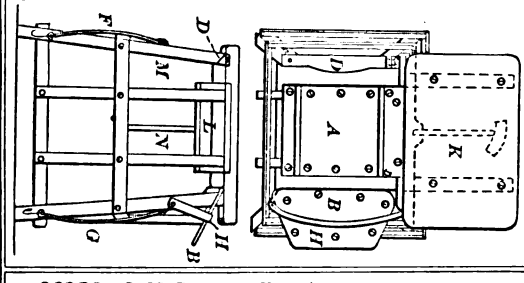

86739—J. M. Deprez—*Fire Arm.*

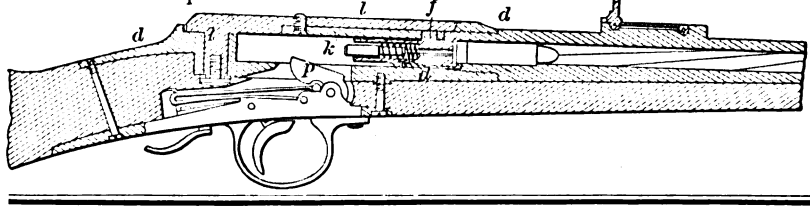

86737—Mesnil & Eyth—*Propelling Vessels on Canals.*

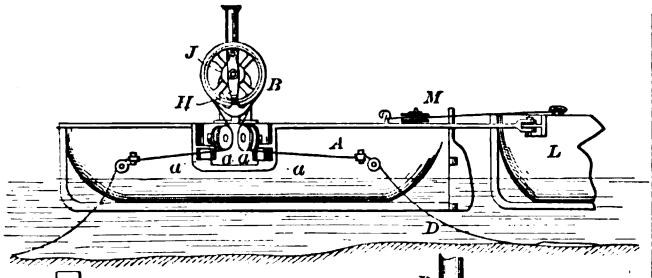

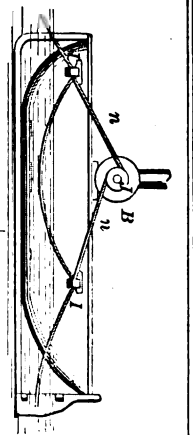

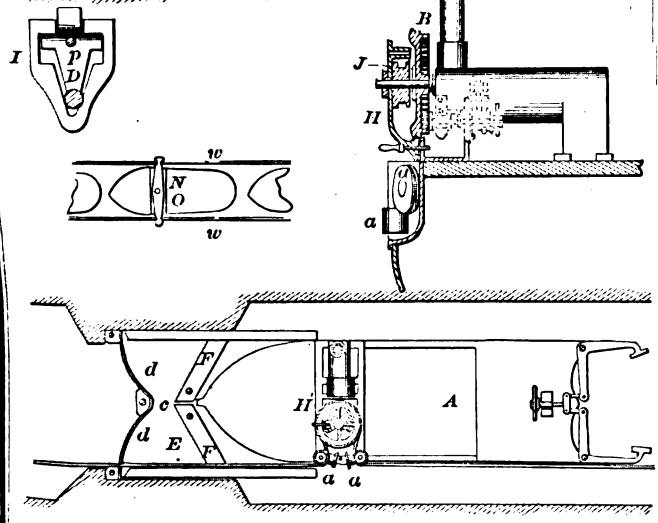

86741—W. Dutton—*Box Scraper.*

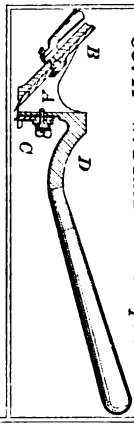

86745—L. H. Gano—*Bag Tie.*

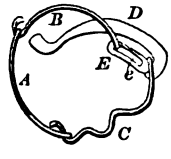

86744—A. O. & E. G. Ganiard—*Ottoman.*

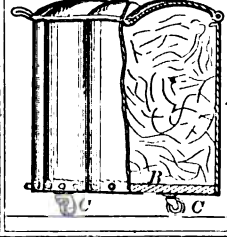

86746—Garver & Bikle—*Threshing Machine.*

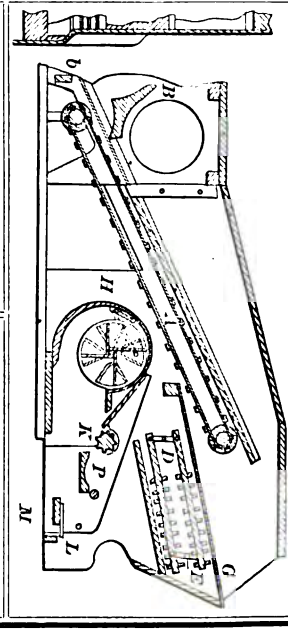

86743—M. Fuos—*Threshing Machine.*

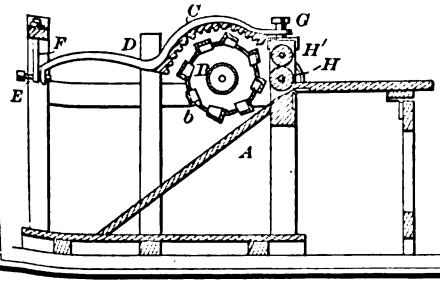

86740—E. F. Dunaway—*Sash Clamp.*

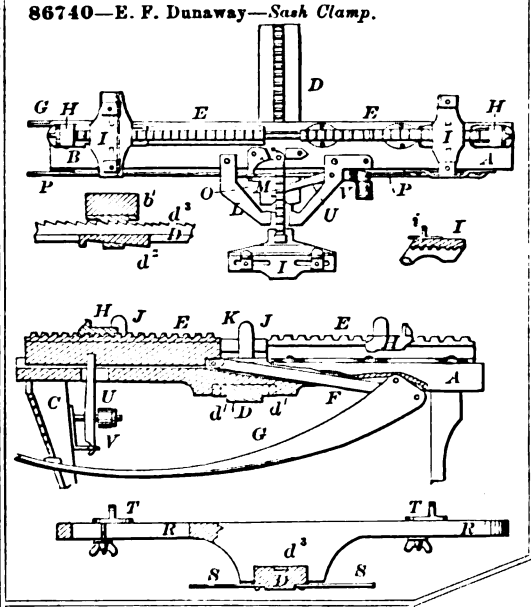

86748—Guernant & Rowlett—*For Cutting Tobacco Plugs.*

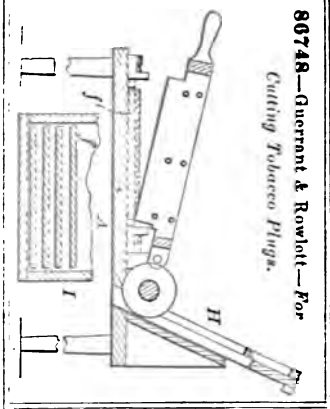

86750—T. Hicks—*Cultivator.*

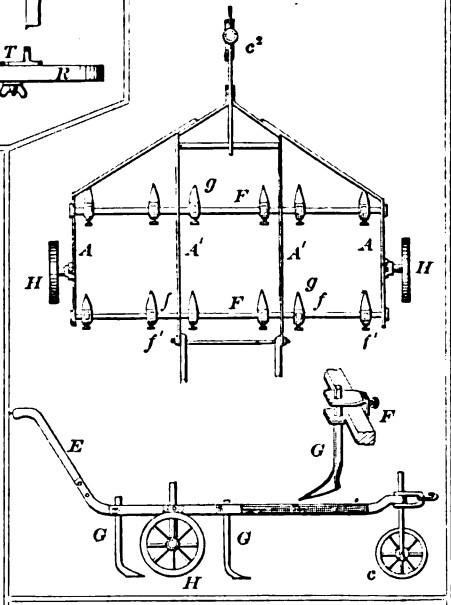

86751—V. Himmer—*Watch.*

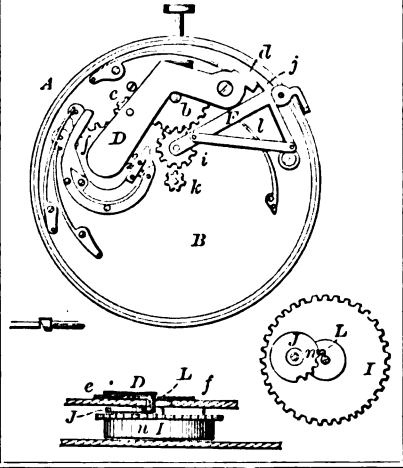

86747—J. Greener—*Piano Forte.*

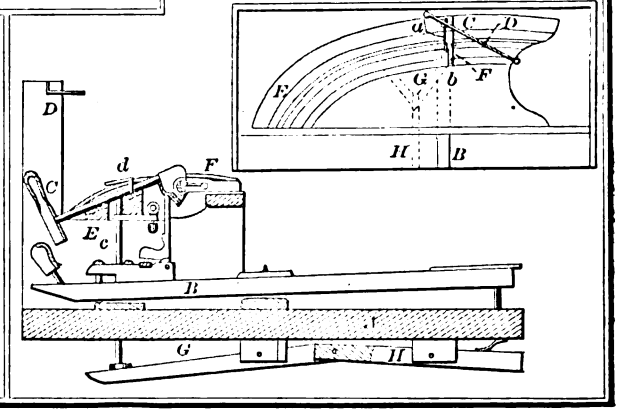

86749—H. H. Hendrick—*Globe Valve.*

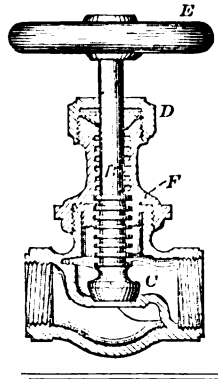

86752—D. M. Holmes—*Cake Machine.*

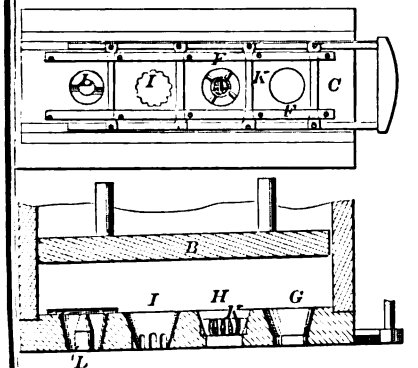

86753—G. L. Holt—*Attaching Erasers to Pencils.*

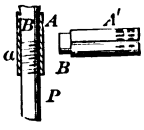

86755—G. & D. Hurn—*Machine Belting.*

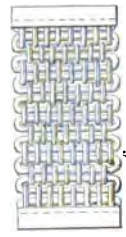

86759—J. L. Jones—*Cask Handle.*

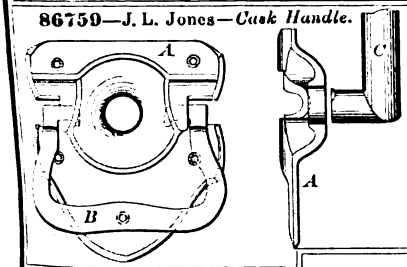

86764—P. A. La France—*For Trimming Cigar Ends.*

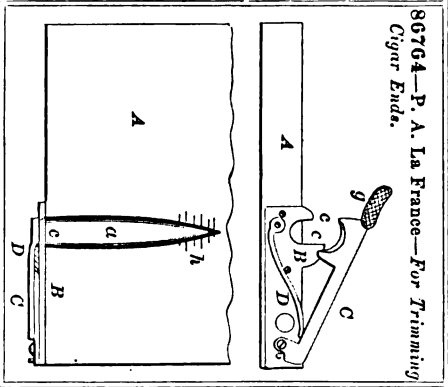

86761—C. C. Klein—*Oil Cup*

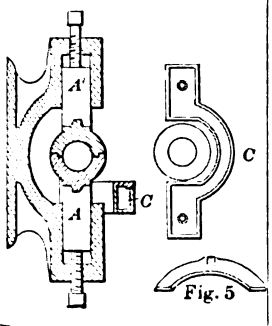

86765—A. S. Layton—*Beehive.*

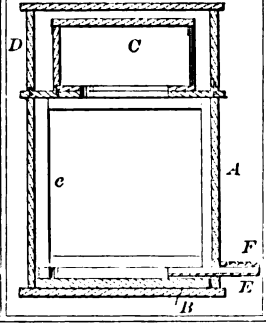

86760—H. W. Ketcham—*Sail Bender.*

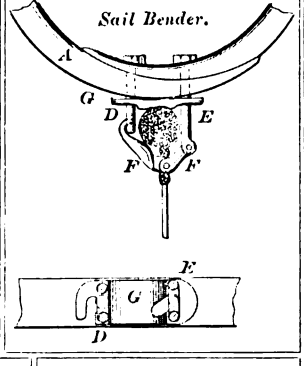

86766—J. Lesperance—*Railroad Car Ventilator.*

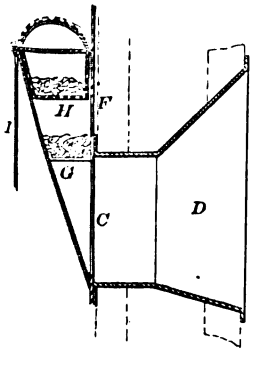

86762—A. M. Knapp—*Nursing Bottle.*

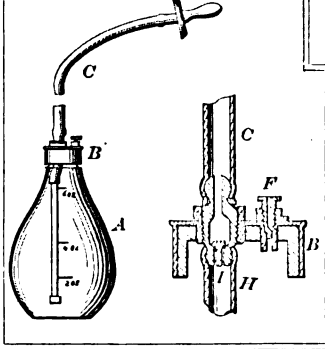

86756—J. V. Hutschler—*Hames Fastener.*

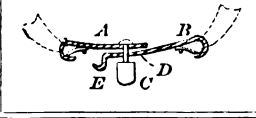

86757—C. B. James—*Needle Wrapper.*

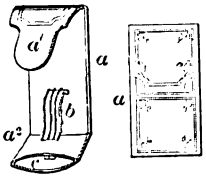

86763—Koch & Schüle—*Paging and Numbering Machine.*

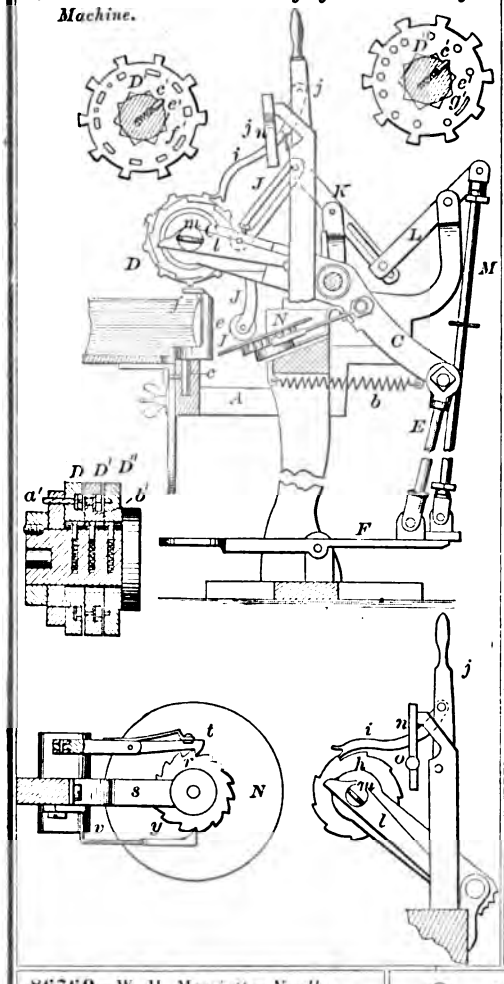

86767—J. W. Lowe—*Fire Kindler.*

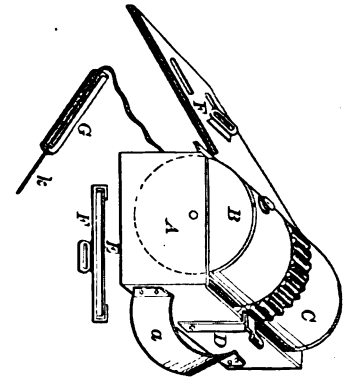

86768—Lubolt & Trout—*Harrow.*

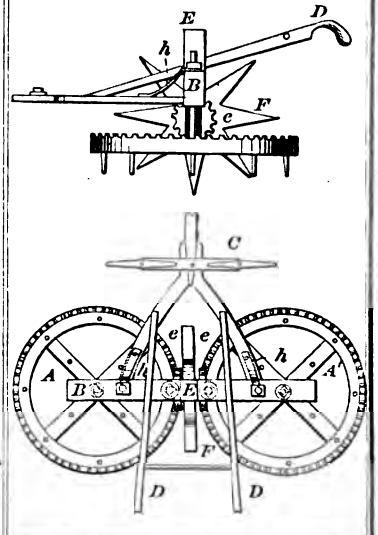

86769—W. H. Marriott—*Needle.*

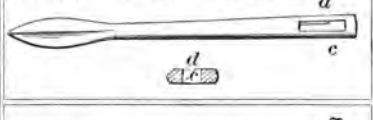

86770—Marshall & Bicknell—*Carriage Brake.*

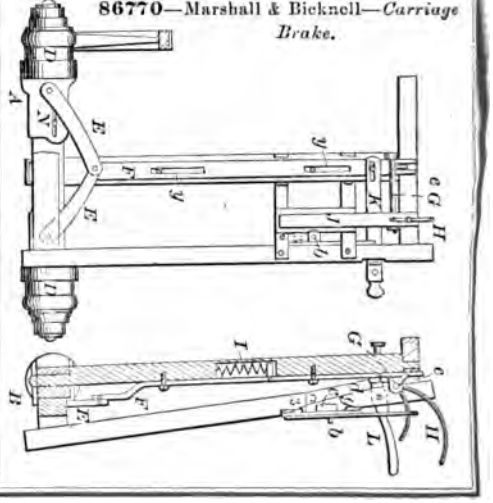

86772—W. S. Mayo—*Carriage Wheel.*

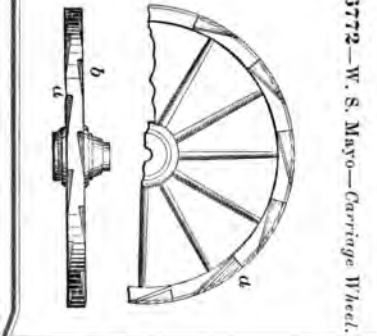

86773—W. L. McKibbin—*Sash Lock.*

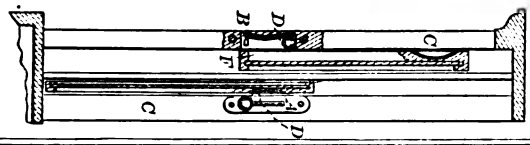

86774—W. Michael—*Harvester.*

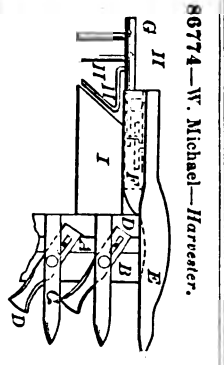

86776—D. B. Morgan—*Cultivator and Seed Planter.*

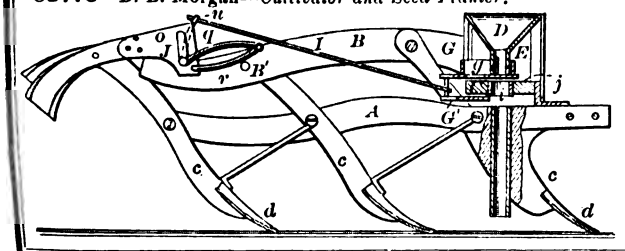

86777—M. D. Myers—*Hay Spreader.*

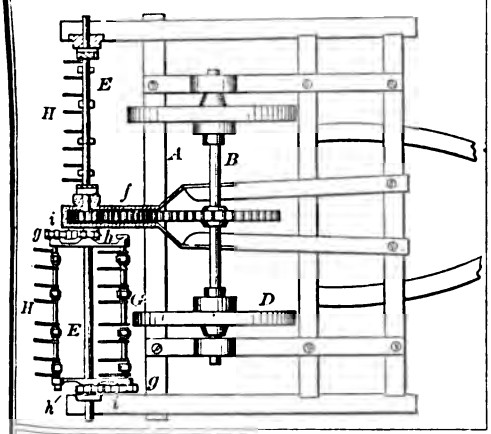

86779—S. C. Phinney—*Fur Boot and Shoe Counters.*

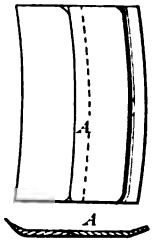

86775—S. Miller—*Horse Hay Fork.*

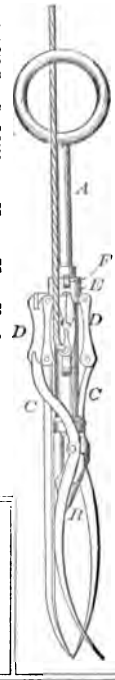

86780—Russell & Holmes—*Railroad Car Ventilator.*

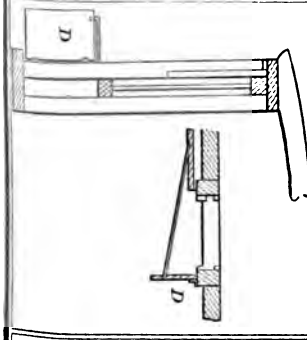

86782—Schnackenberg & Rosenkranz—*Soda Fountain.*

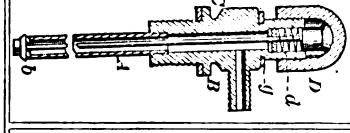

86781—E. Schellhorn—*Game Counter.*

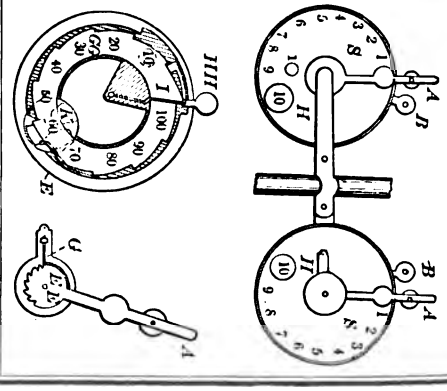

86778—J. Nock—*Trunk Lock.*

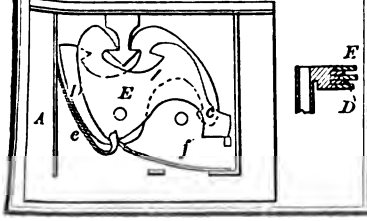

86740—E. F. Dunaway—*Sash Clamp.*

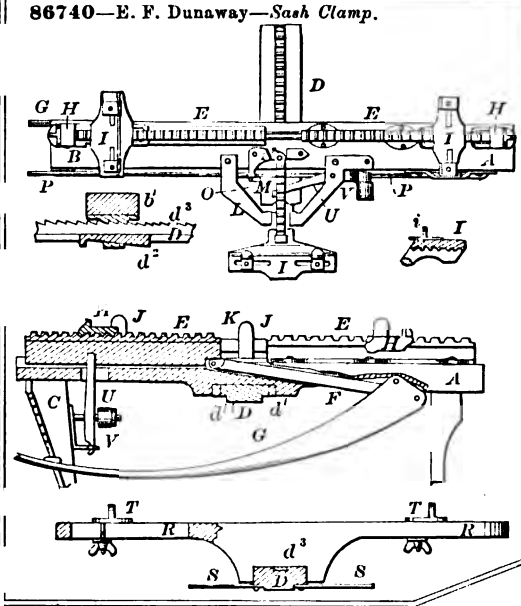

86748—Guerrant & Rowlett—*For Cutting Tobacco Plugs.*

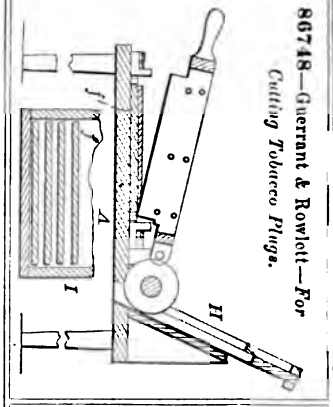

86750—T. Hicks—*Cultivator.*

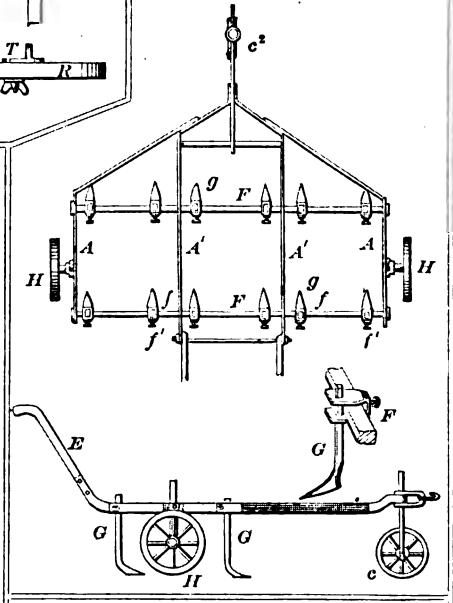

86751—V. Himmer—*Watch.*

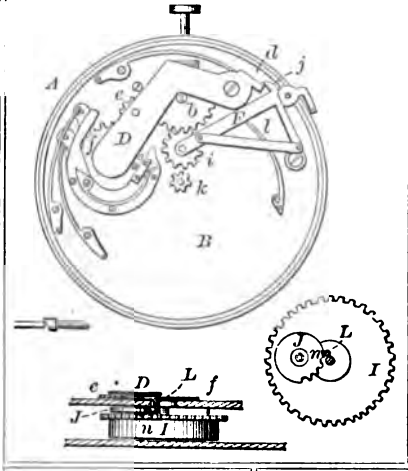

86747—J. Greener—*Piano Forte.*

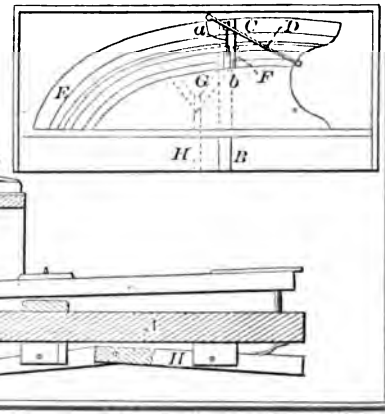

86749—H. H. Hendrick—*Globe Valve.*

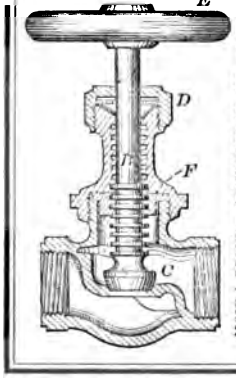

86795—J. Absterdam—*Furnace.*

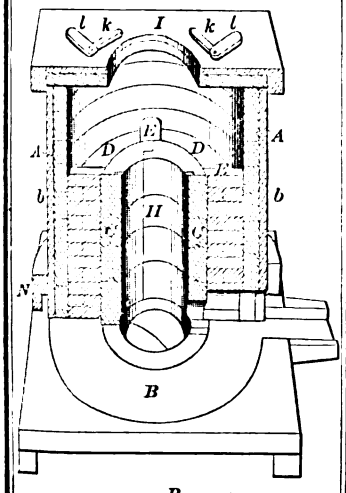

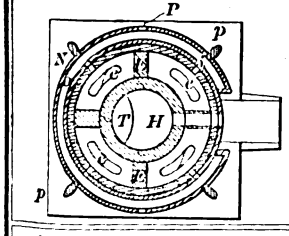

86798—R. Allison—*Saddle Cloth.*

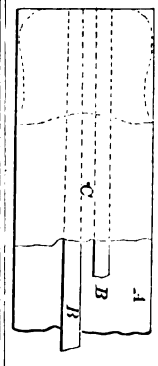

86800—Armstrong & Dame—*Pocket Knife and Door Fastener.*

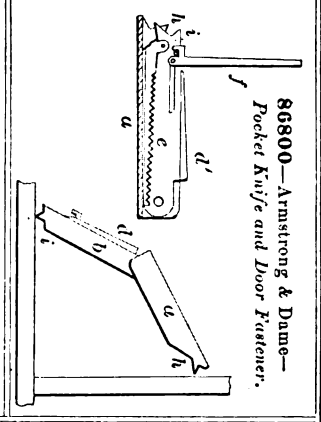

86797—H. A. Adams—*Door Key Guard.*

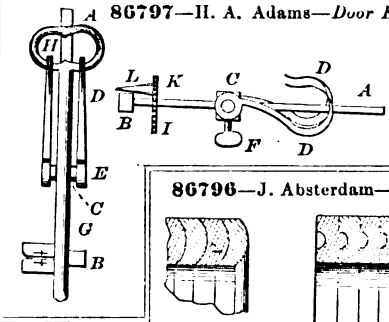

86796—J. Absterdam—*Furnace.*

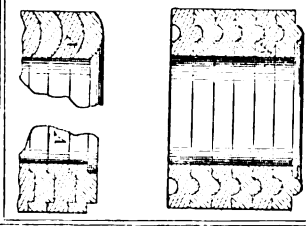

86802—W. Baxter—*Handle for Taps, Augers and Drills.*

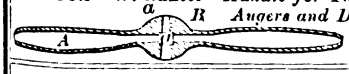

86804—J. Bean—*Pump.*

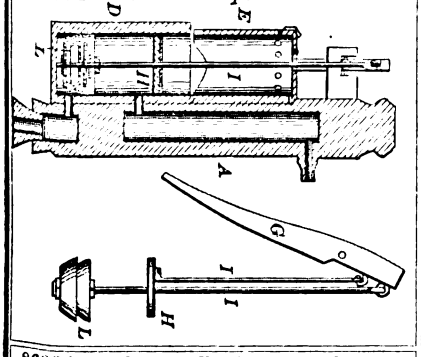

86807—F. Bremerman—*Wagon Tongue Support.*

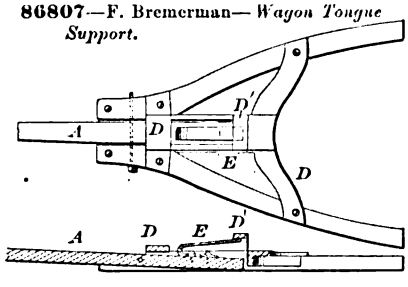

86803—G. Bantz—*For Extracting Essences.*

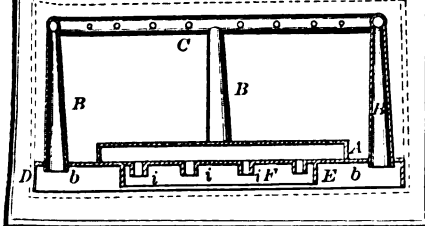

86809—B. J. Burnett—*Ventilator.*

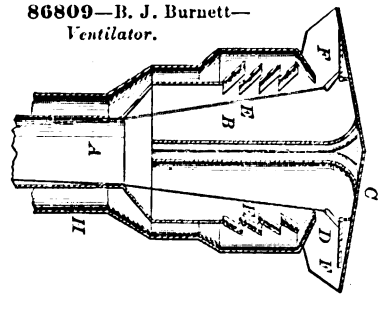

86812—J. Cogan—*Horse Collar.*

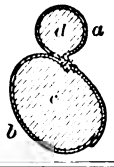

86810—R. Cassaday—*Curtain Fixture.*

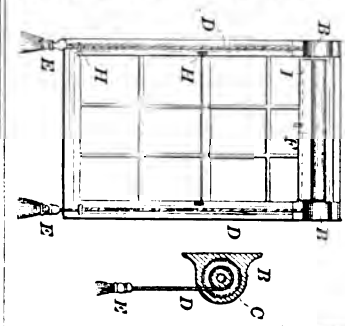

86805—E. B. Bigelow—*Power Loom.*

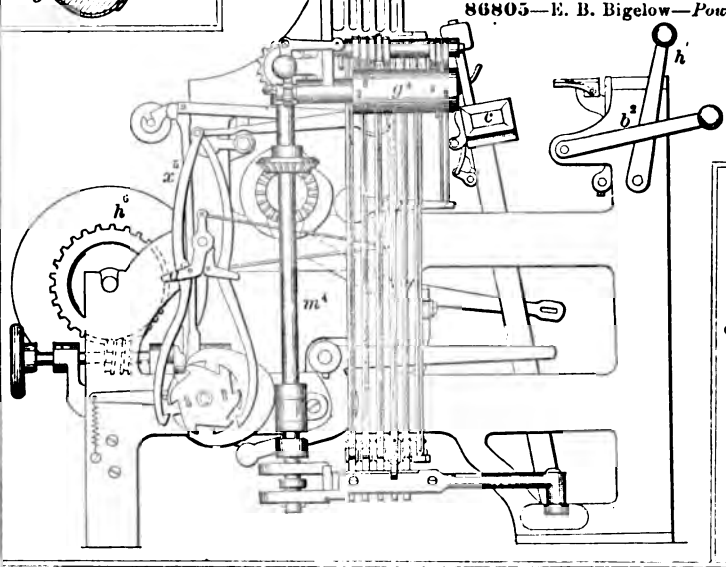

86811—J. B. Clark—*Whiffletree Plate.*

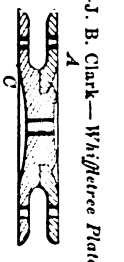

86806—E. B. Bigelow—*Loom for Weaving Ingrain Carpets.*

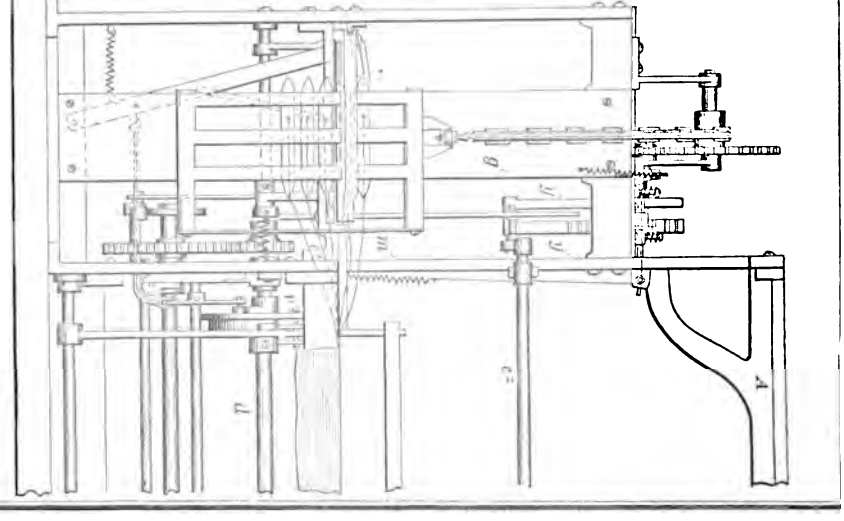

86815—J. M. Connel—*Door Spring.*

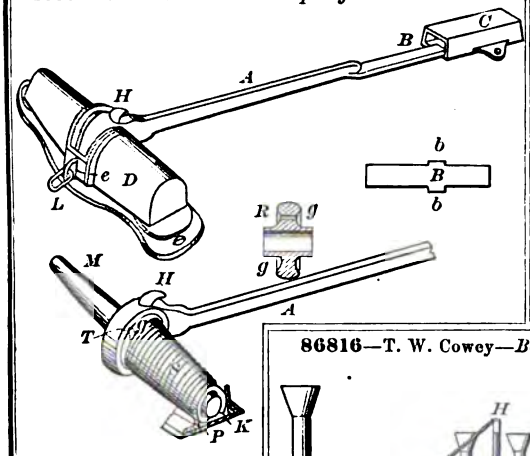

86814—J. & A. Condell—*Toy.*

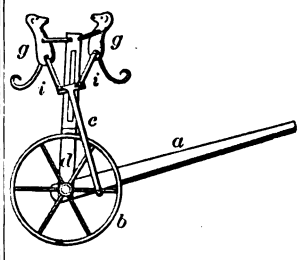

86816—T. W. Cowey—*Bottle Filler and Corker.*

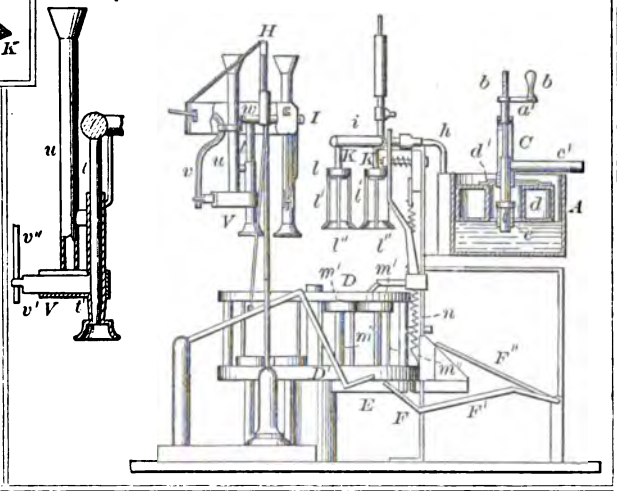

86821—D. A. Danforth—*Well Tube.*

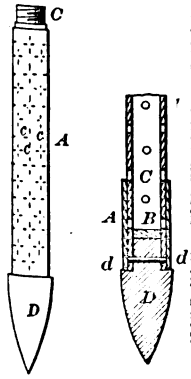

86817—C. O. Crosby—*Polishing Needles.*

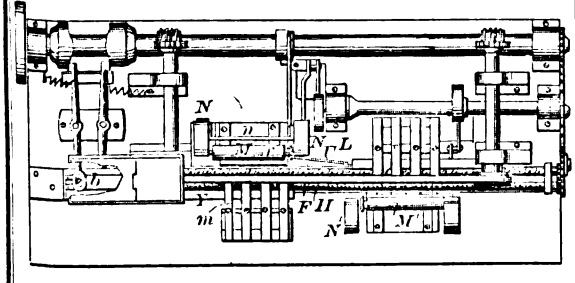

86819—C. O. Crosby—*For Scouring Needles.*

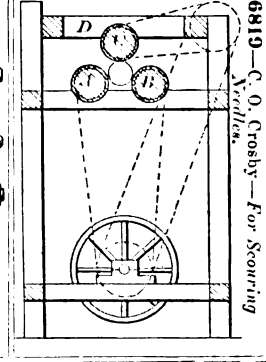

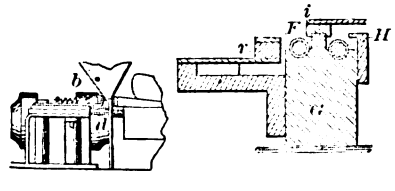

86820—Curtiss & Hendee—*Lounge.*

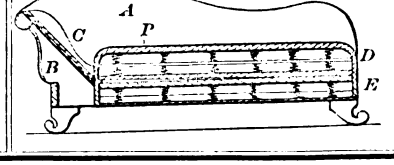

86824—Dimond & Doolittle—*Shade Holder.*

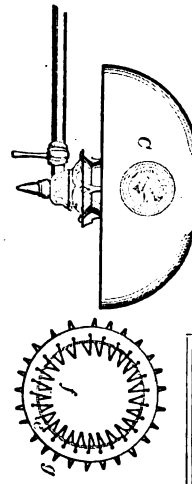

86822—E. S. Dawson—*Trace Buckle.*

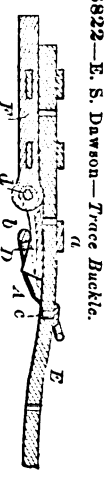

86818—C. O. Crosby—*Polishing Needles.*

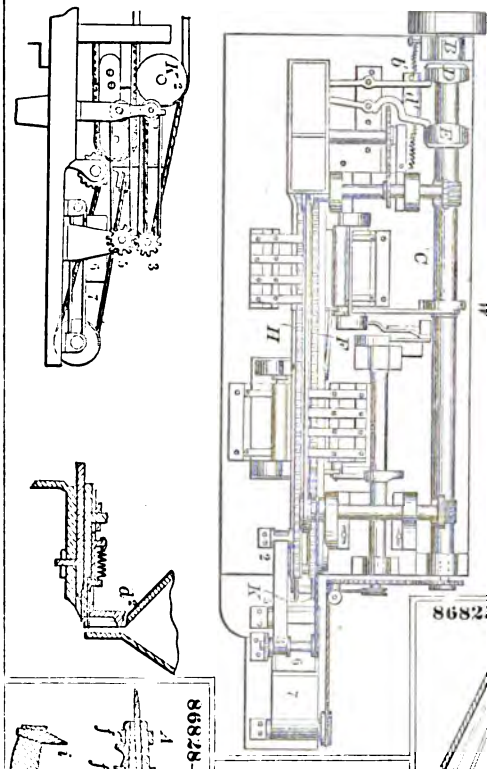

86825—Dimond & Doolittle—*Lamp Shade.*

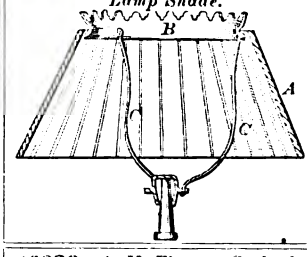

86828—J. E. Emerson—*Cant Hook.*

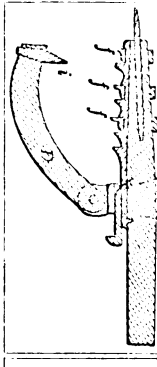

86827—L. Elliott, Jr.—*Rubber Boot.*

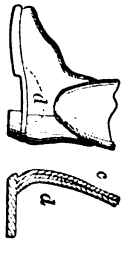

86829—A. H. Flores—*Scale for Tailors' Use.*

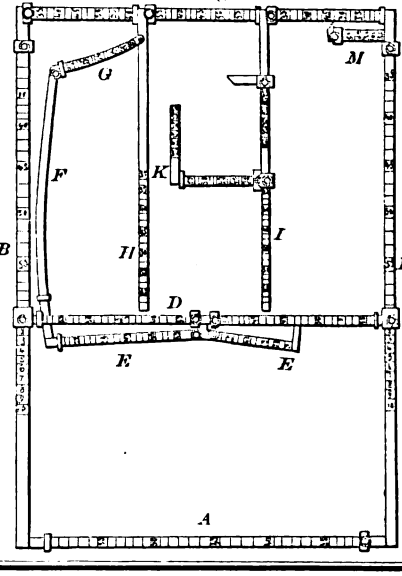

86823—G. W. Devoe—*Liquid Meter.*

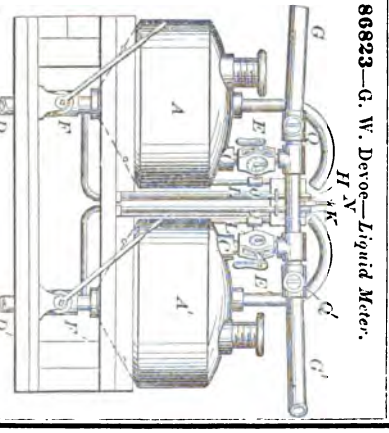

86826—A. Duvall—*Mechanical Movement.*

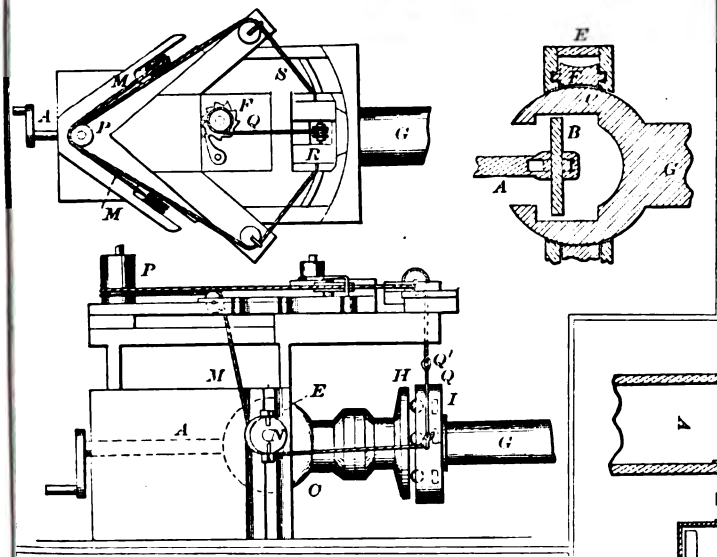

86832—B. D. Godfrey—*Boot and Shoe Nail.*

86835—H. Hannon—*For White Lead.*

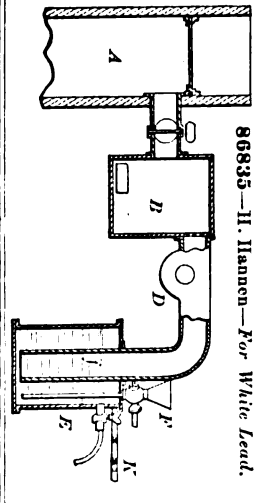

86830—Foster & Dill—*For Making Carpet Lining.*

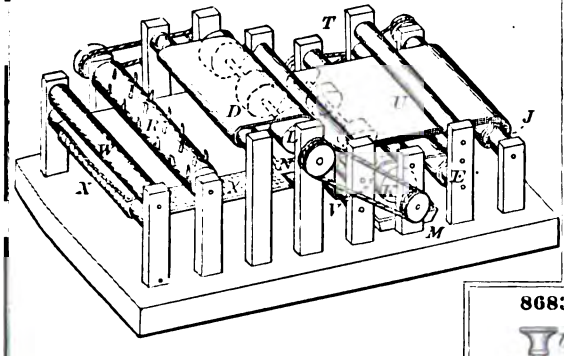

86833—W. S. Hall—*Treadle.*

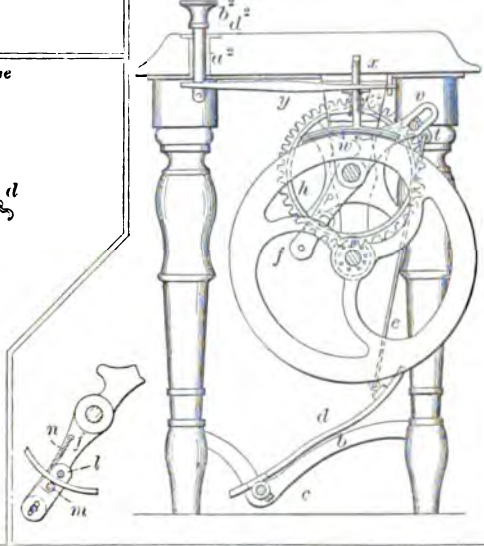

86831—G. D. S. Gochnauer—*Horse Hay Fork.*

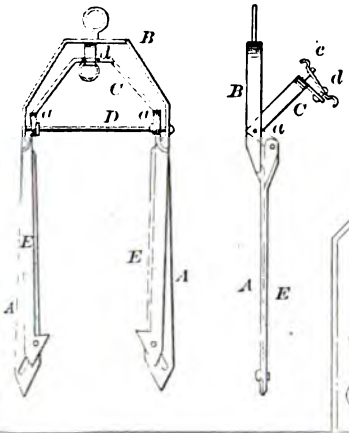

86834—W. Hanlon—*Velocipede.*

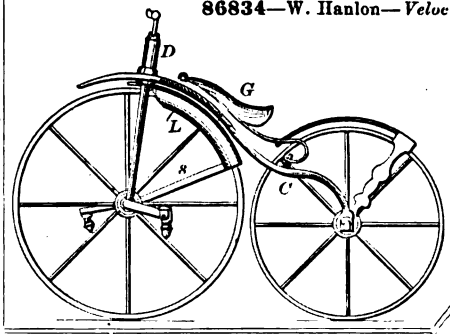

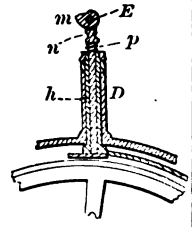

86839—A. P. Ingalls—*Plow.*

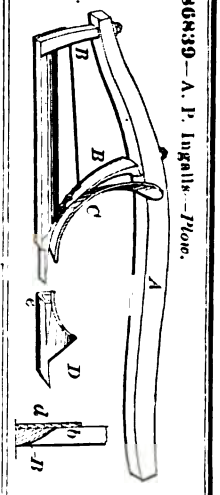

86838—H. K. Horton—*Fire Kindler.*

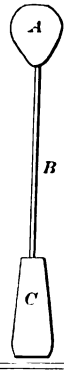

86845—P. Laflin—*Clock Key.*

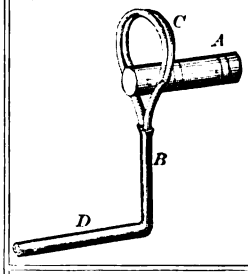

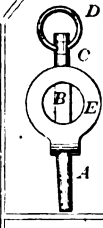

86844—P. Laflin—*Watch Key.*

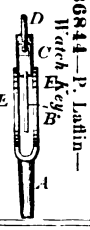

86846—N. H. Lindley—*Horse Hoe.*

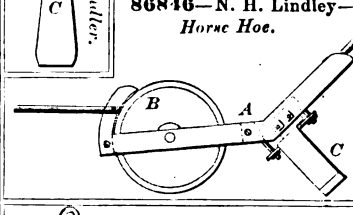

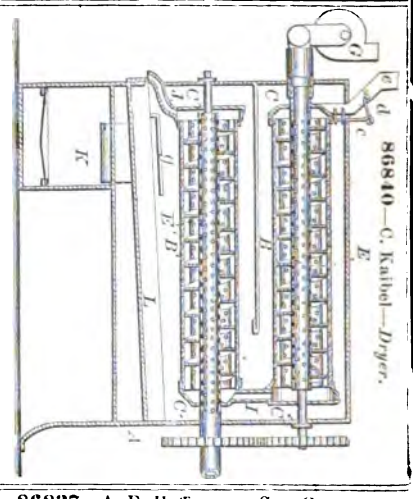

86840—C. Kaibel—*Dryer.*

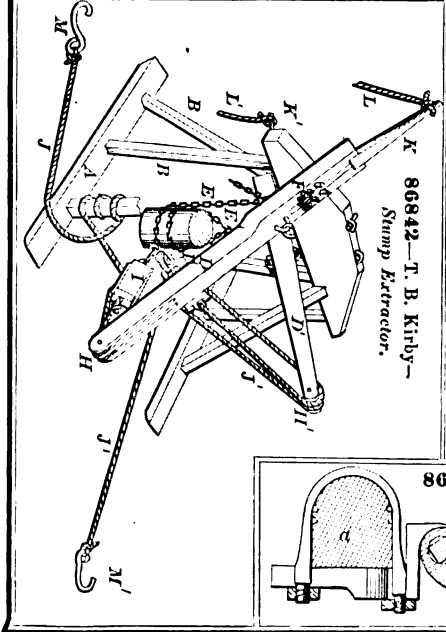

86842—T. B. Kirby—*Stump Extractor.*

86837—A. E. Hoffmann—*Saw Gauge.*

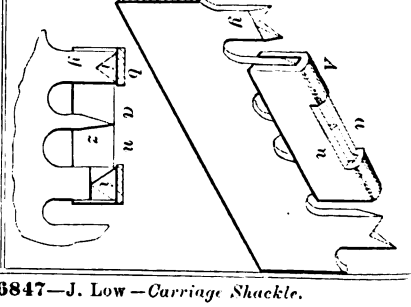

86847—J. Low—*Carriage Shackle.*

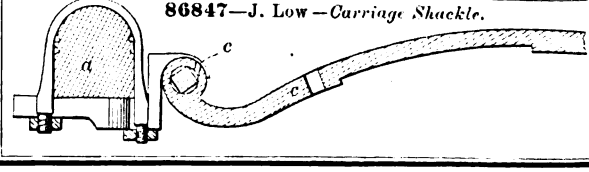

86848—T. A. Macaulay—*Sewing Machine.*

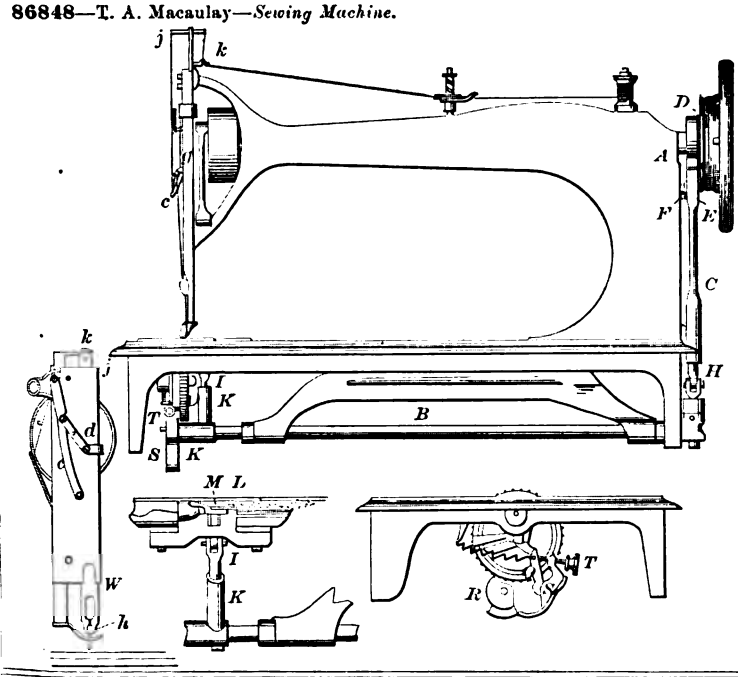

86849—E. B. Manning—*Tea Pot.*

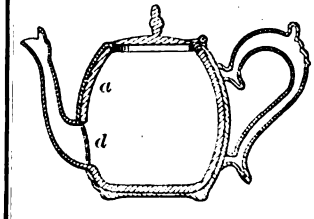

86852—W. McKeraham—*Back Band Hook.*

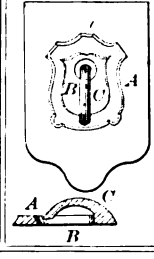

86850—G. Maulick—*Saw.*

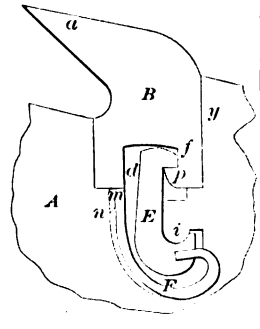

86855—A. Miller—*Horse Rake.*

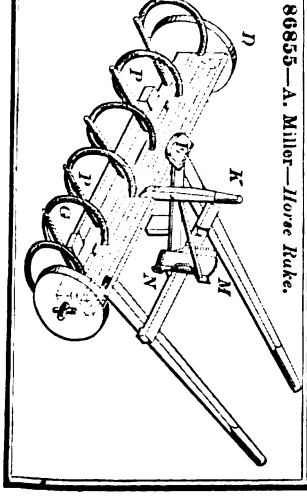

86851—A. W. Maxwell—*Moulding Plane.*

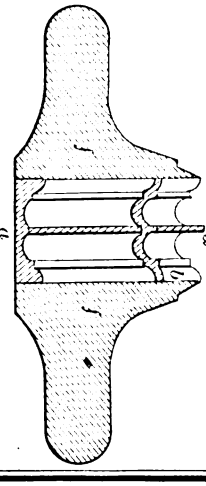

86854—M. Mellinger—*Stove.*

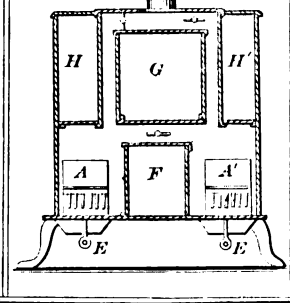

86853—J. McManus—*Brick Machine.*

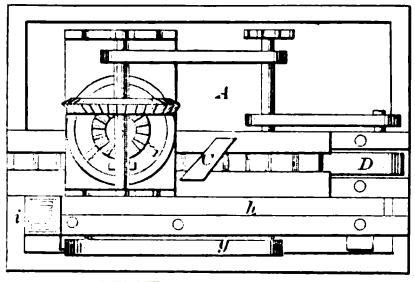

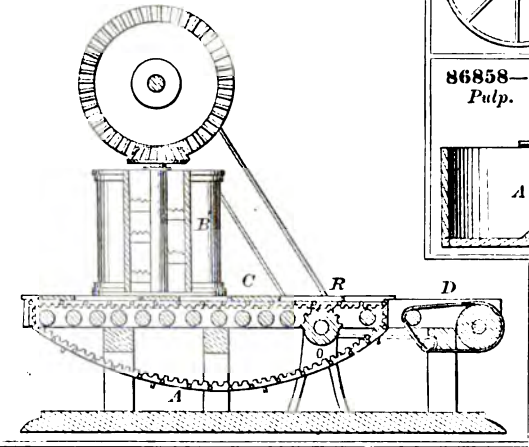

86856—J. Monroe—*Velocipede.*

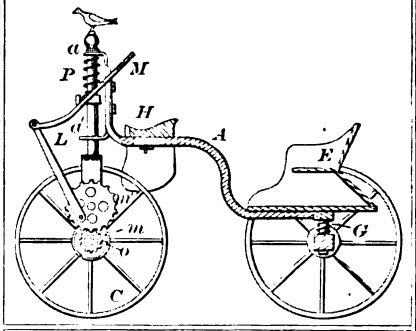

86858—W. Parkison—*For Making Paper Pulp.*

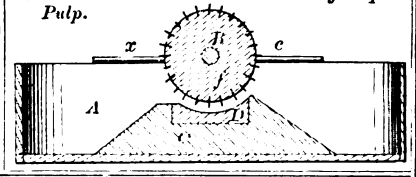

86863—B. Richards—*Draught Link.*

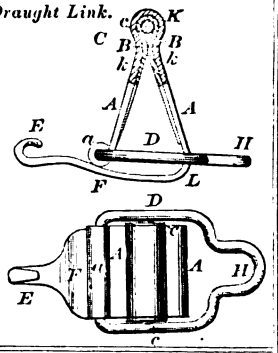

86861—A. D. Puffer—*Beer Faucet.*

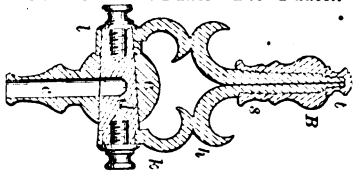

86864—C. E. Richards—*Jewelry, &c.*

86857—H. Myer—*Boot Calk.*

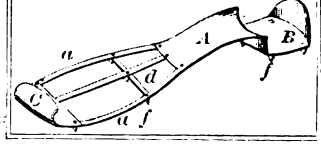

86862—W. Randall—*Grate Bar.*

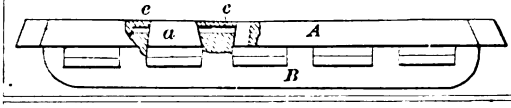

86860—A. Pope—*For Obtaining Cream from Milk.*

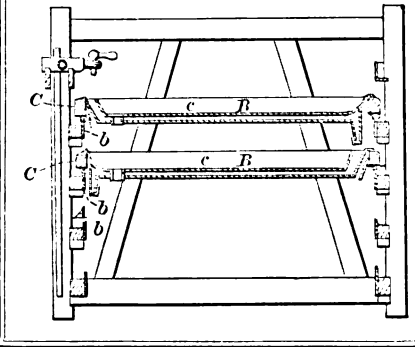

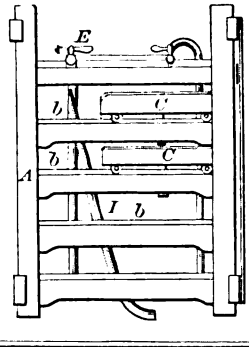

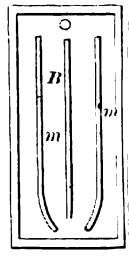

86865—B. Roy—*Sash Elevator and Fastener.*

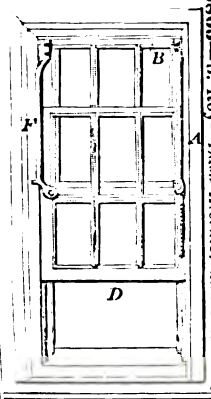

86866—C. W. Saladee—
Carriage Gearing.

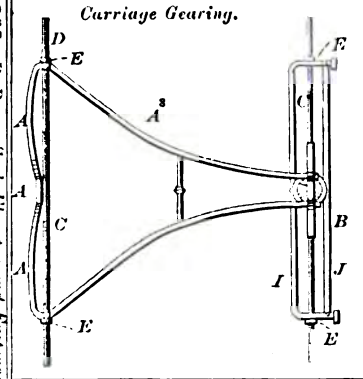

86869—J. F. Sanford—*Lamp Burner.*

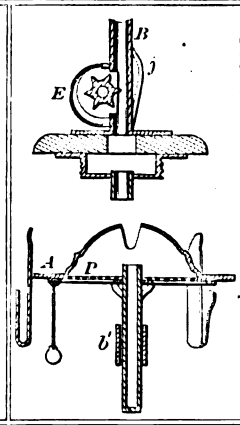

86867—J. F. Sanford—*Lamp.*

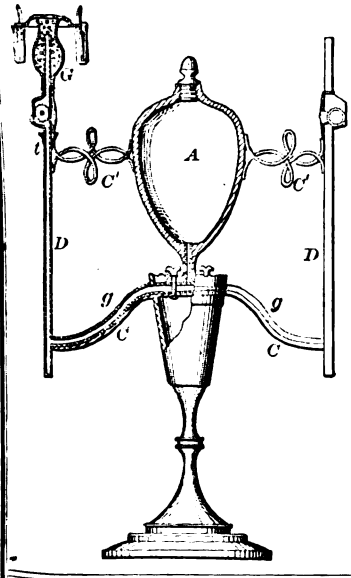

86874—O. L. Shepherd—*Railway Rail Chair.*

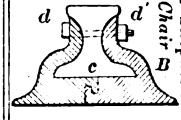

86868—J. F. Sanford—
Lamp Wick Trimmer.

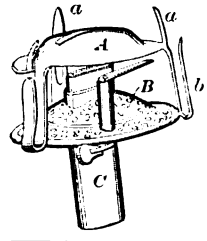

86870—H. S. Saroni—*Vapor Burner.*

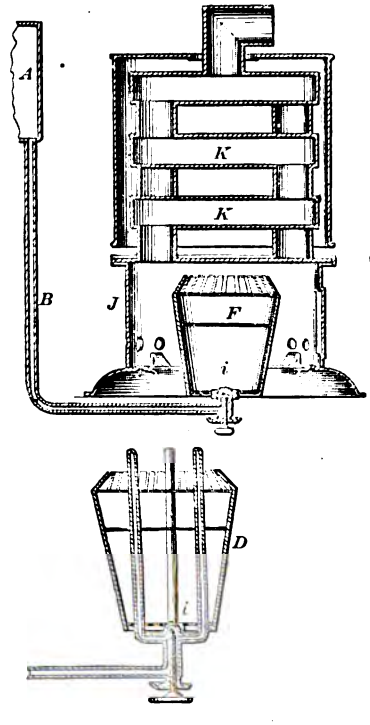

86871—C. Sauvage—*Hydro-Carbon Burner.*

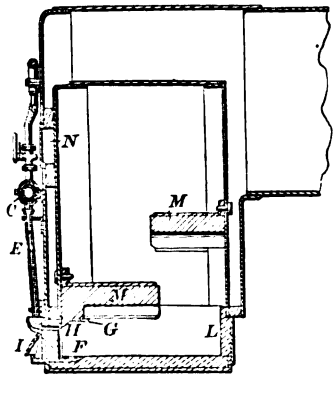

86834—W. Hanlon—*Velocipede.*

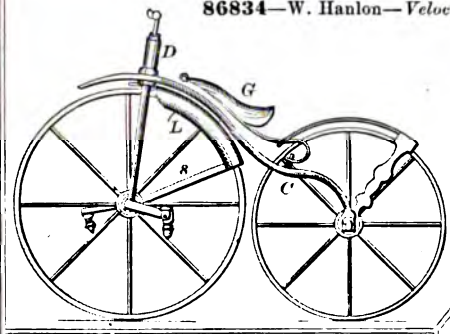

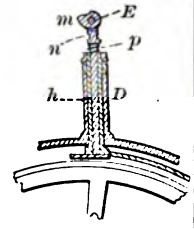

86839—A. P. Ingalls—*Plow.*

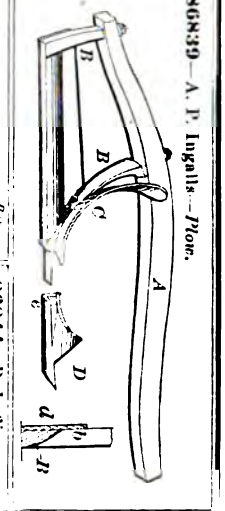

86838—H. K. Horton—*Fire Kindler.*

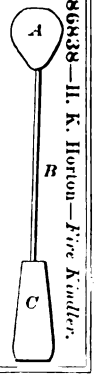

86845—P. Laflin—*Clock Key.*

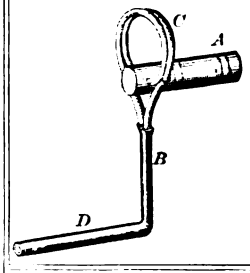

86844—P. Laflin—*Watch Key.*

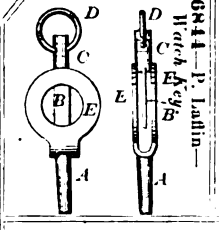

86846—N. H. Lindley—*Horse Hoe.*

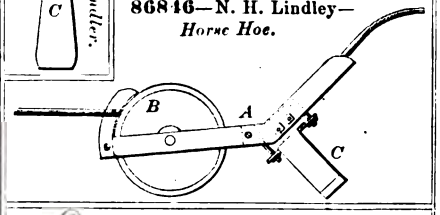

86840—C. Kaibel—*Dryer.*

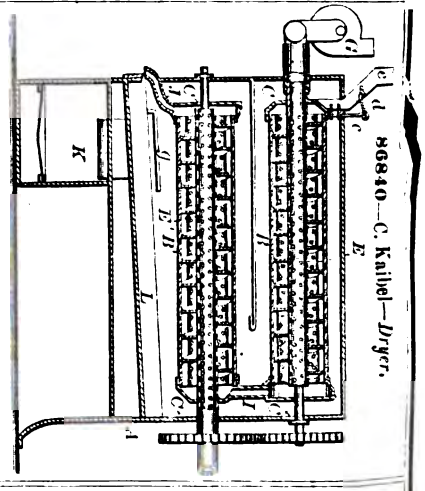

86842—T. B. Kirby—*Stump Extractor.*

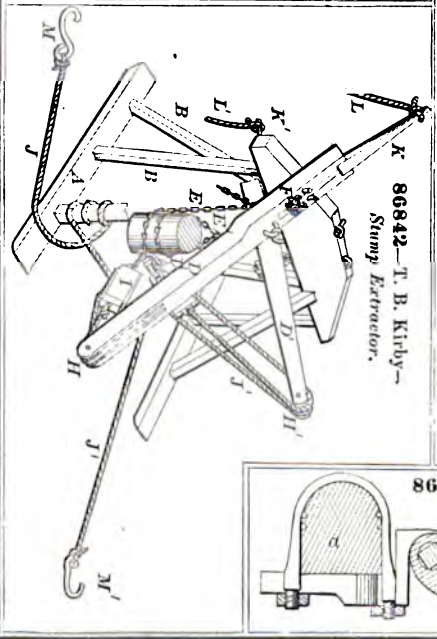

86837—A. E. Hoffmann—*Saw Gauge.*

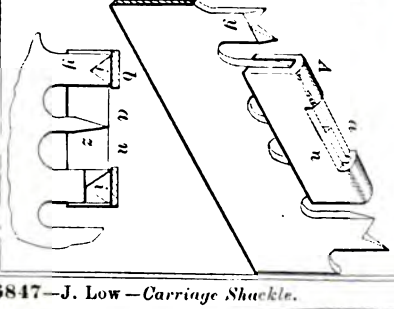

86847—J. Low—*Carriage Shackle.*

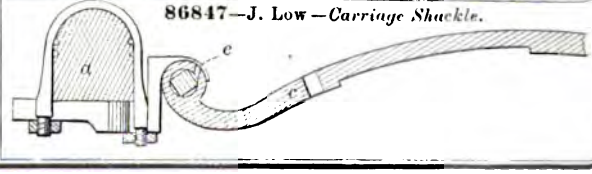

86881—A. H. Tait—*For Sulphuric Acid.*

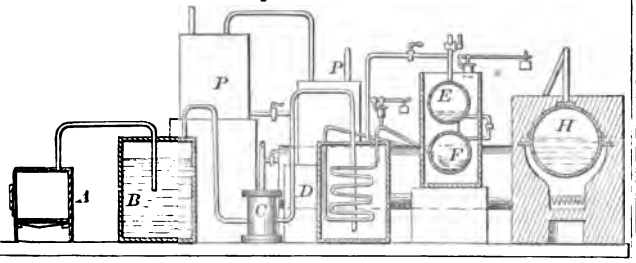

86886—J. Vincent—*Fruit Box.*

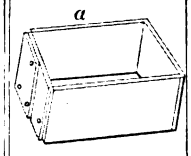

86883—A. W. Townshend—*Sawing Machine.*

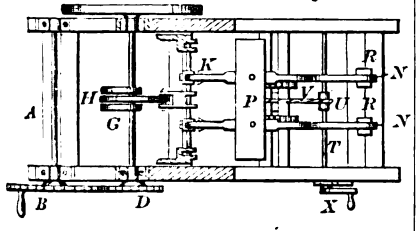

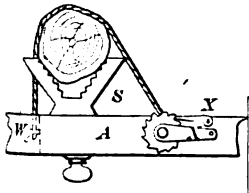

86889—J. Wallwork—*Saw Handle.*

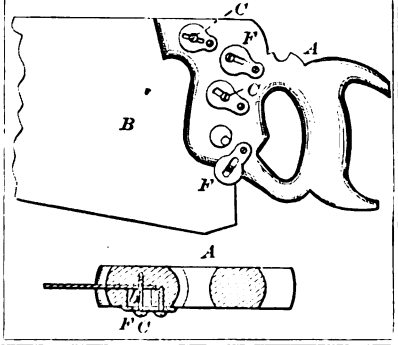

86892—D. Witt—*Bedstead.*

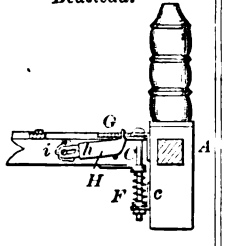

86891—Whiting & Whittemore—*Chimney Cowl.*

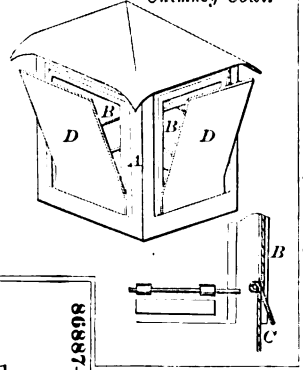

86885—A. B. Vandemark—*Car Brake and Starter.*

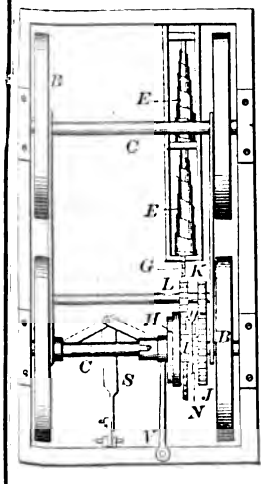

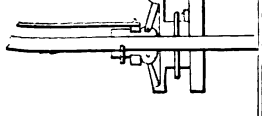

86890—Weaver & Allen—*Vent Plug.*

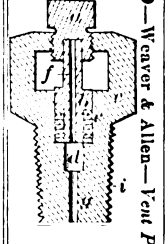

86887—F. Walker—*Stub Holder.*

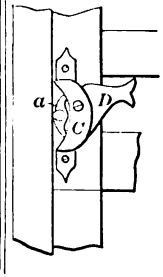

86888—F. Walker—*Clothes Pin.*

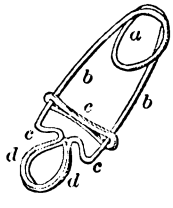

86893—D. Witt—*Breaker and Leveler.*

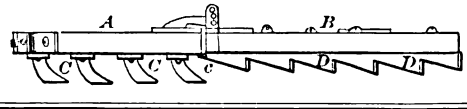

86894—D. Cumming—*Ice Creeper.*

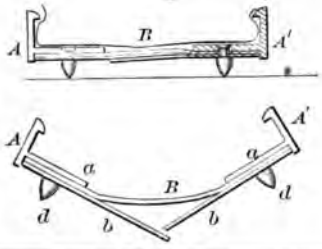

86895—J. G. Ishler—*Quilting Frame and Clothes Dryer.*

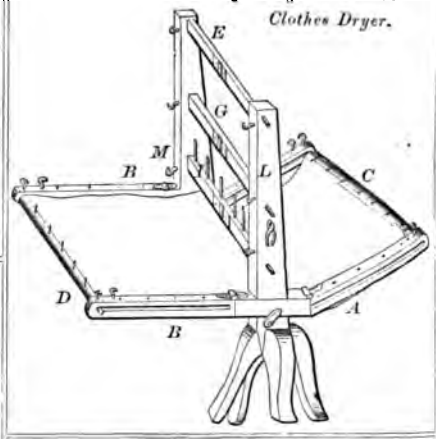

86896—J. Bader, Sr.—*Plow.*

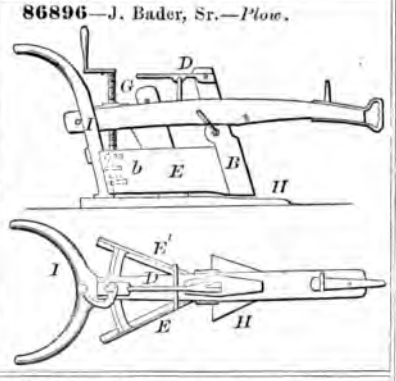

86897—H. L. Beach—*Railway Rail Chair.*

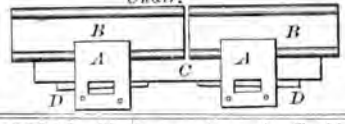

86899—Blunt & Smith—*Invalid Chair.*

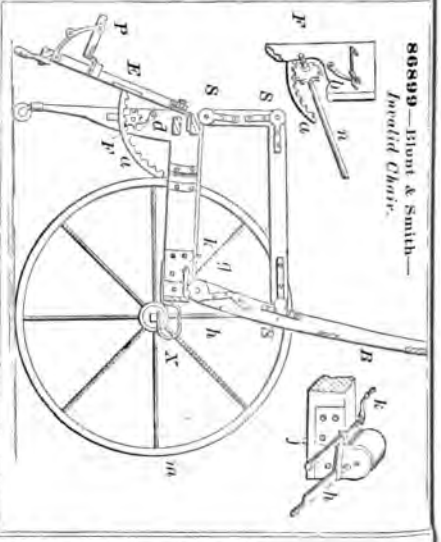

86902—W. Carter—*Hook for Tackle Blocks.*

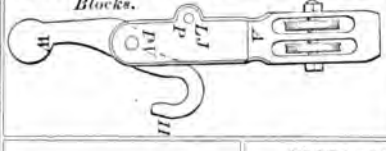

86900—Boon & Mills—*Rein Holder.*

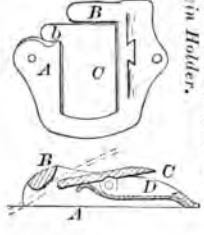

86901—E. E. & M. G. Briggs—*Bedstead.*

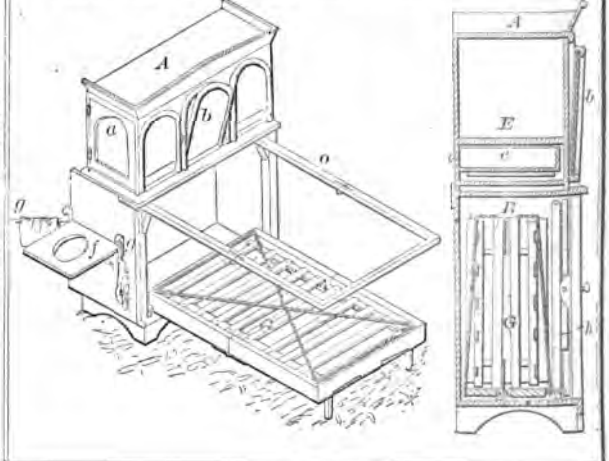

86865—B. Roy—*Sash Elevator and Fastener.*

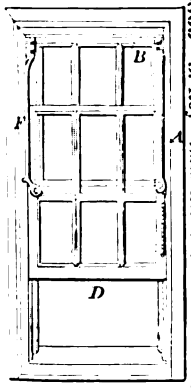

86866—C. W. Saladee—*Carriage Gearing.*

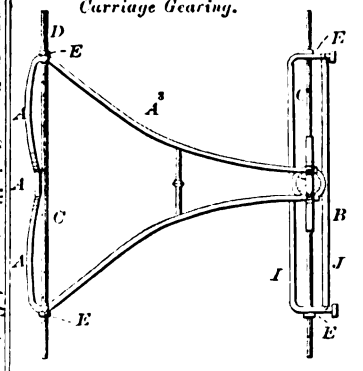

86869—J. F. Sanford—*Lamp Burner.*

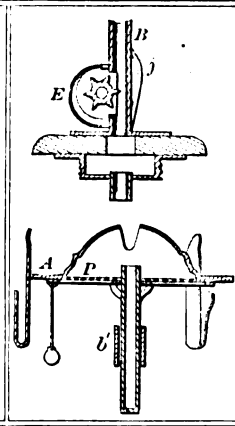

86867—J. F. Sanford—*Lamp.*

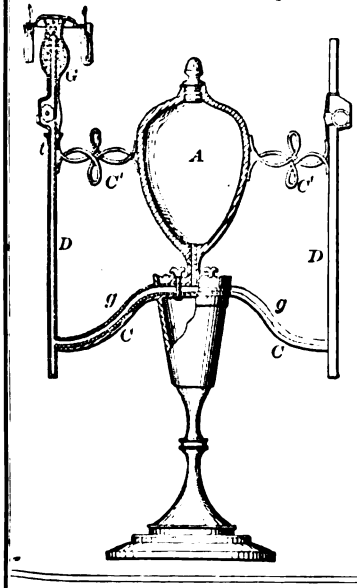

86874—O. L. Shepherd—*Railway Rail Chair.*

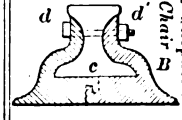

86868—J. F. Sanford—*Lamp Wick Trimmer.*

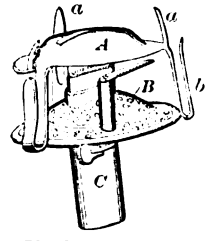

86870—H. S. Saroni—*Vapor Burner.*

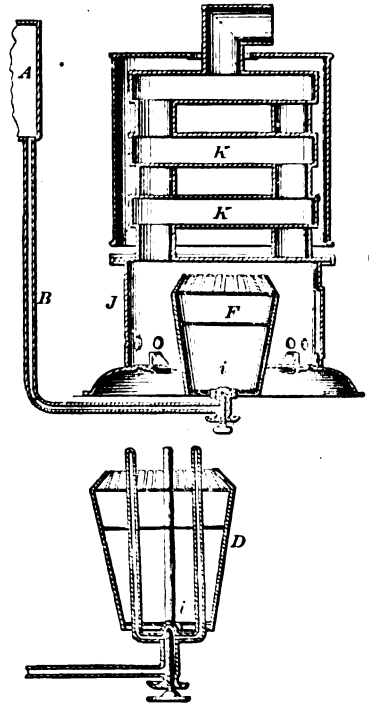

86871—C. Sauvage—*Hydro-Carbon Burner.*

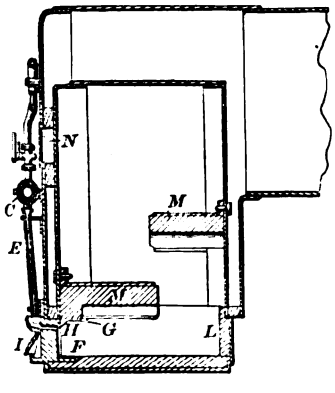

86910—T. D. Day—*Hoop Skirt.*

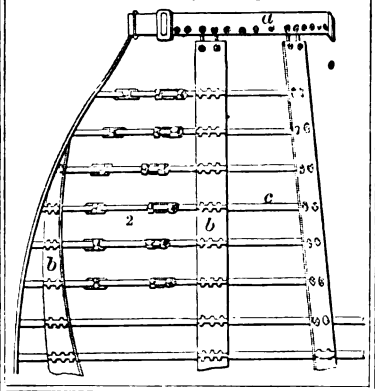

86911—T. J. & F. Dietrichs—*Fastening for Sheet Metal.*

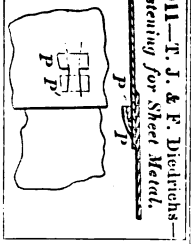

86912—H. Elliott—*For Crozing Staves.*

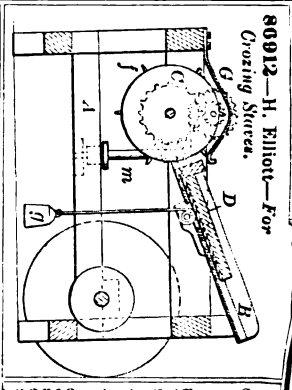

86913—G. J. Flansburgh—*Beehive.*

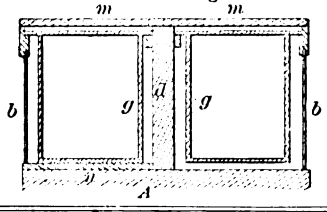

86914—G. H. Fuller—*Nut Machine.*

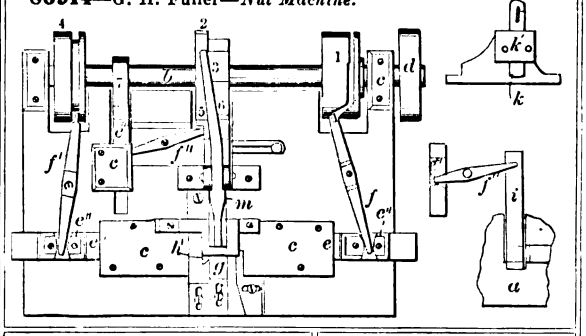

86915—J. C. Gaston—*Beehive.*

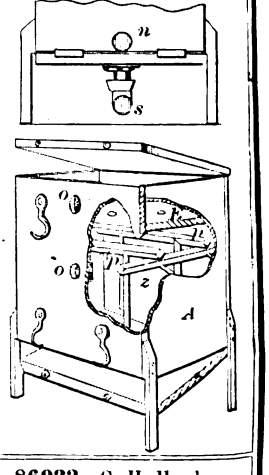

86916—J. C. Gaston—*Spring Bed Bottom.*

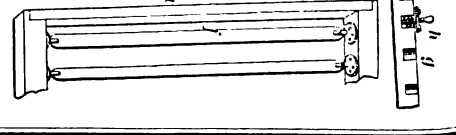

86917—Gillet, Damitte, Dubois & Boissonneau—*Material for Paper.*

86918—J. Green—*Wash Boiler.*

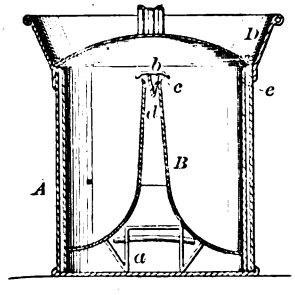

86919—A. A. Griffing—*Game Counter.*

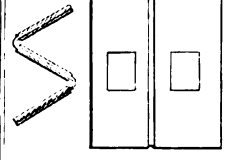

86920—E. Heaton—*Busk for Corsets.*

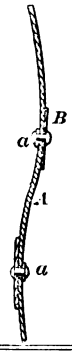

86922—G. H. Hurd—*Dental Jaw Brace.*

Fig. 1 Fig. 2

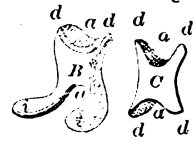

86923—G. B. Isham—*Gridiron.*

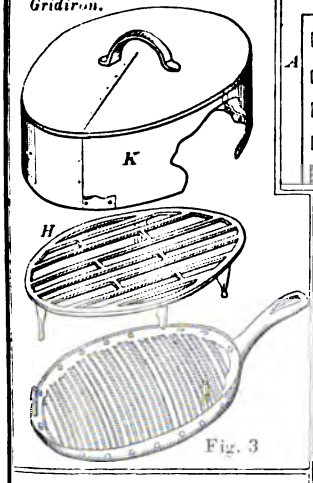

86924—W. Jasper—*Farm Fence.*

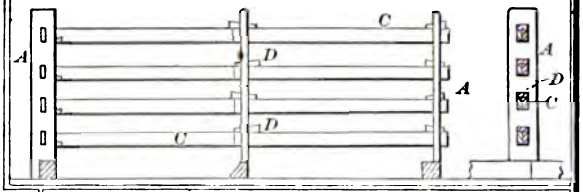

86930—C. W. Jones—*Railroad Switch.*

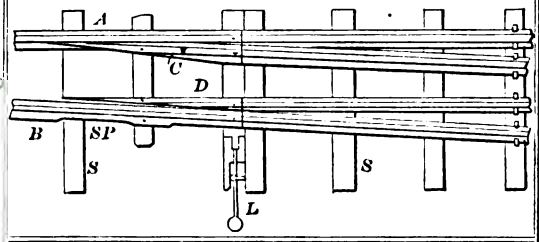

86925—G. H. Johnson—*Grain Spout.*

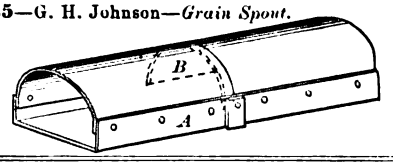

86926—G. H. Johnson—*Elevator Leg.*

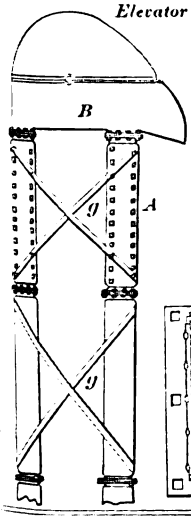

86927—G. H. Johnson—*Elevator Leg.*

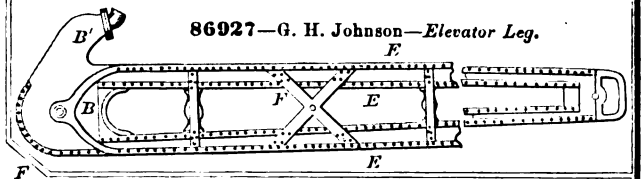

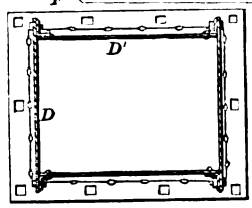

86929—Johnson & Milsom—*Building Brick or Hollow Block.*

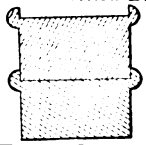

86928—G. H. Johnson—*Valve for Grain Bins.*

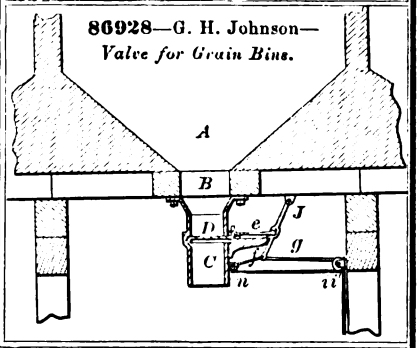

86932—T. Mann—*Brick Elevator.*

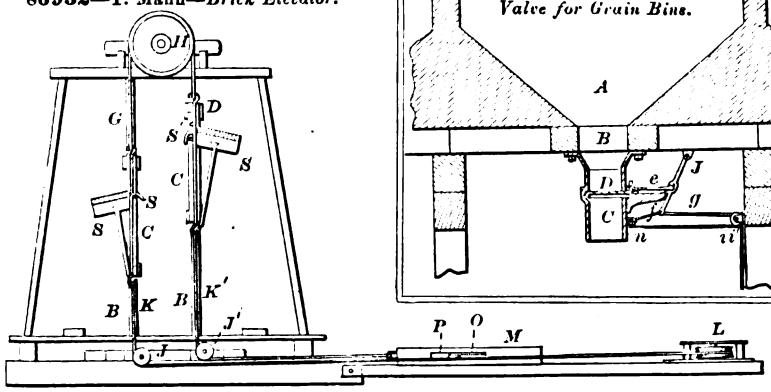

86931—W. H. Lamb—*Timepiece.*

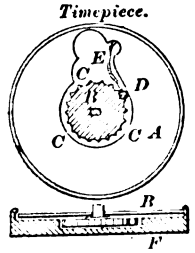

86933—M. S. Marshall—*Curtain Fixture.*

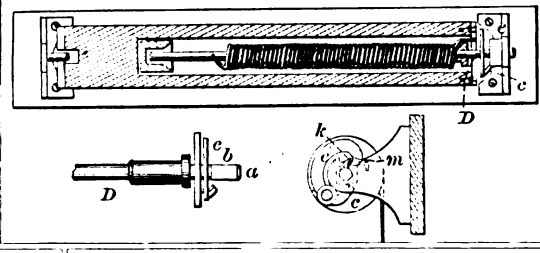

86934—N. F. Mathewson—*Horse Hay Fork.*

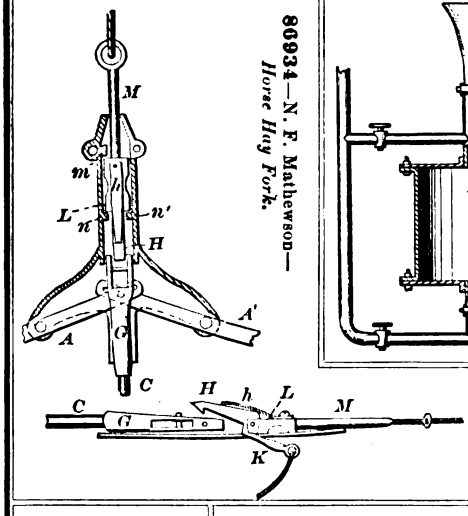

86939—A. Paraf—*For Extracting the Coloring Matter of Madder.*

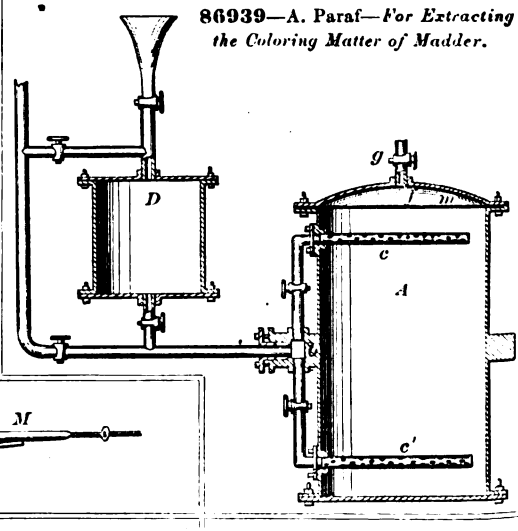

86935—W. A Middleton—*Fence Post.*

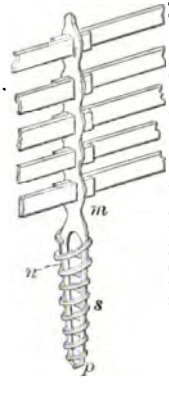

86936—J. W. Moffitt—*Sash Lock.*

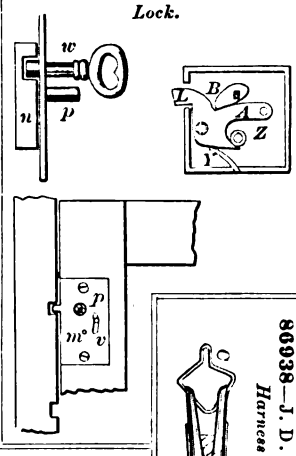

86940—J. S. Perry—*Stove*

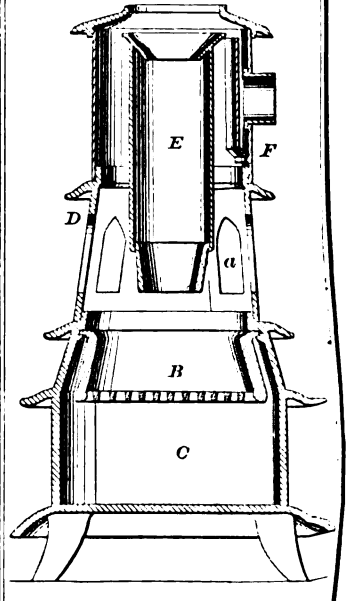

86938—J. D. S. Nowell—*Clip for Harness Traces.*

86937—H. Mooers—*Car Axle.*

86941—Phillips & Richardson—*Corn Planter.*

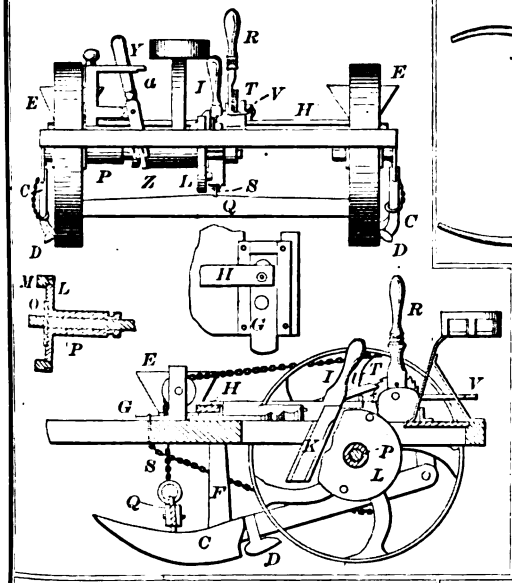

86945—H. Schauer—*Saw Set and Punch.*

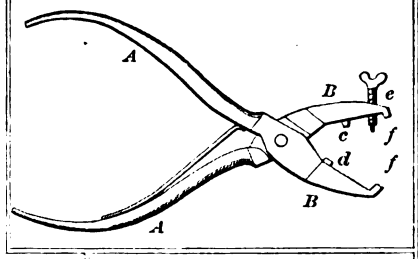

86947—I. S. Sheets—*Ditching Plow.*

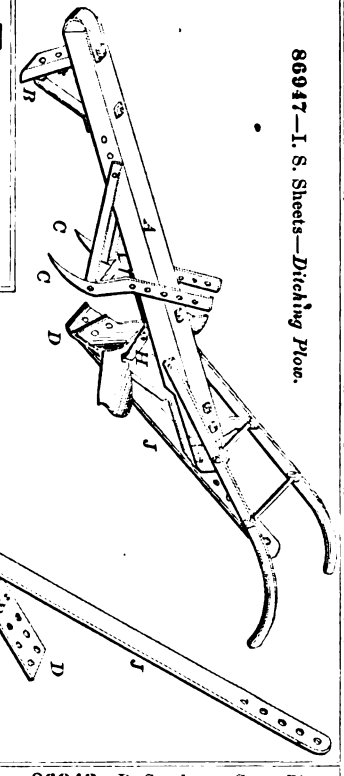

86948—J. J. Sherman—*For Evaporating Liquids.*

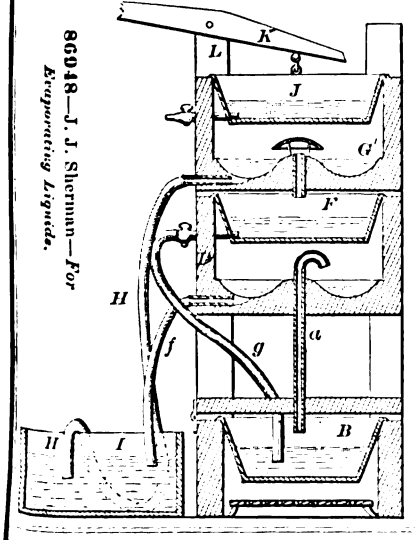

86943—D. Sanders—*Stove Pipe Damper.*

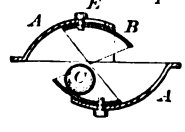

86942—F. W. Robinson—*Grain Separator.*

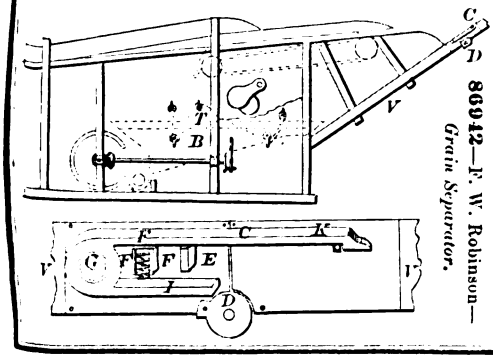

86946—C. W. Shattuck—*Shutter Worker.*

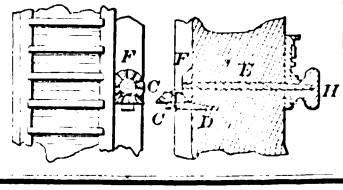

86949—G. Sickles—*Fluid Meter.*

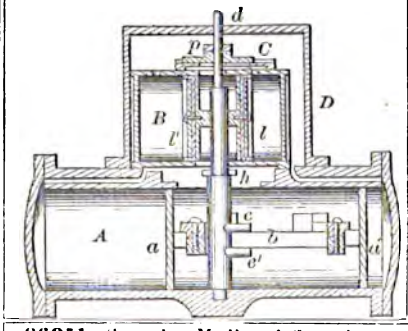

86950—M. D. Smith—*Seeding Machine and Cultivator.*

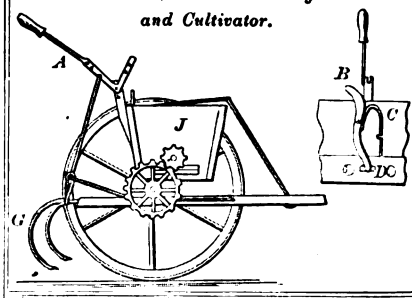

86951—Spangler, Madlem & Spangler—*Manure Drag.*

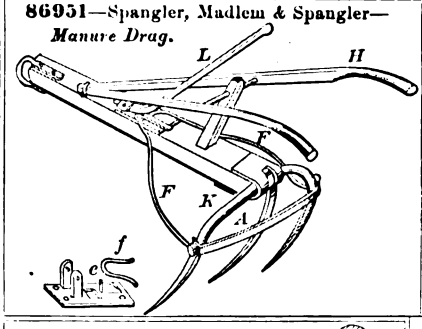

86952—C. F. Steel—*Receipt and Postage Stamp.*

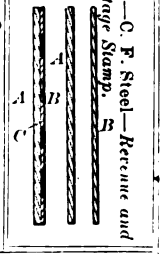

86953—B. W. Taugee—*Carding Machine.*

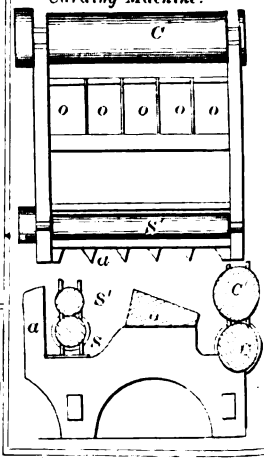

86954—B. W. Taugee—*Carding Machine.*

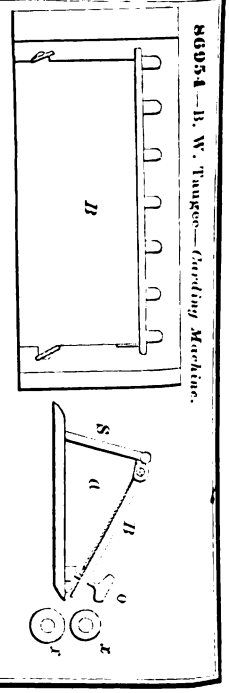

86955—C. D. Ulmer—*Attaching Heels to Boots.*

86956—A. Weed—*Boring Faucet.*

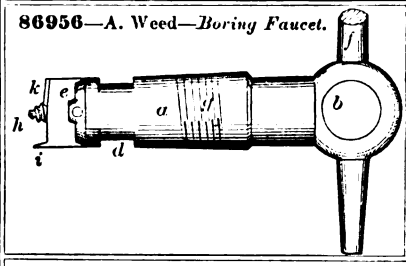

86958—W. Wilber—*Boot and Shoe Shave.*

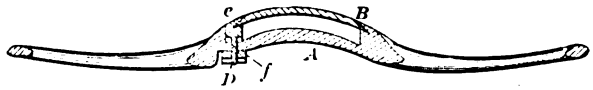

86957—A. Weissenborn—*Sewing Machine Treadle.*

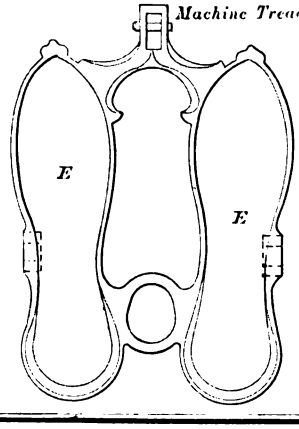

86959—Wilbur & Tuttle—*Carriage Axle.*

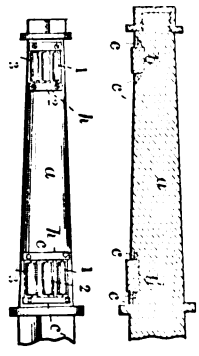

86960—M. S. G. Wilde—*Lawn Mower.*

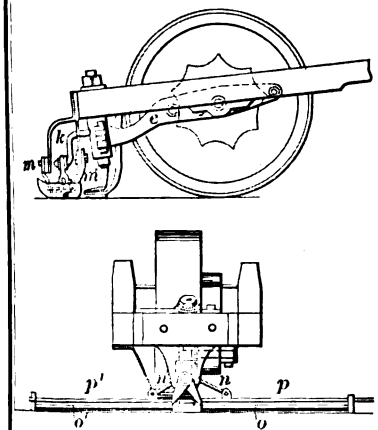

86965—L. Andersen—*Steam Engine.*

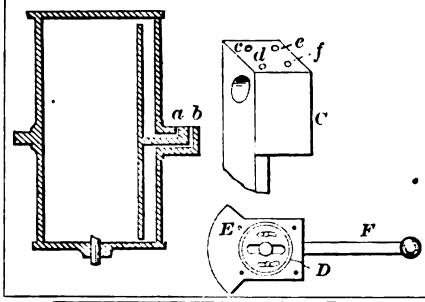

86970—S. C. Catlin—*Faucet for Filling Barrels.*

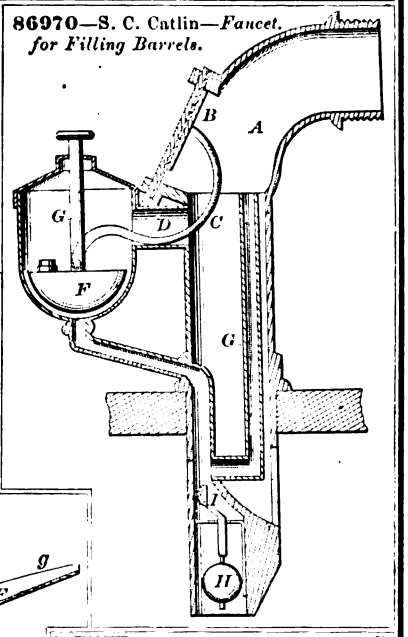

86961—J. D. Wise—*Casting Building Blocks.*

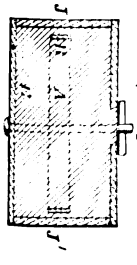

86964—A. N. Allen—*Steam Heater.*

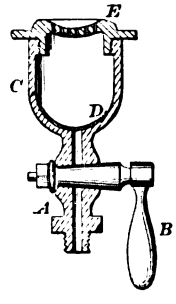

86968—C. Baer—*Type Breaker.*

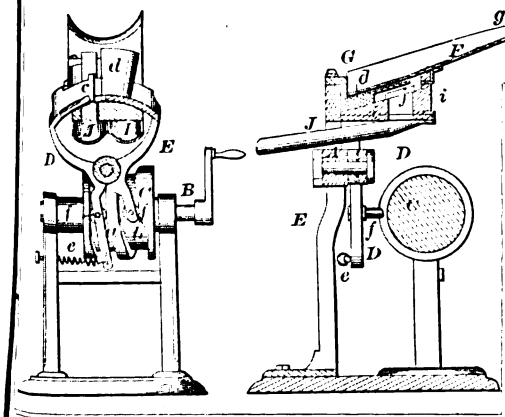

86966—U. W. Armstrong—*Mosquito Net Frame.*

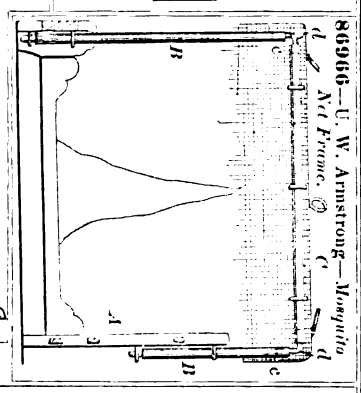

86969—W. Best—*Splitting and Skiving Machine.*

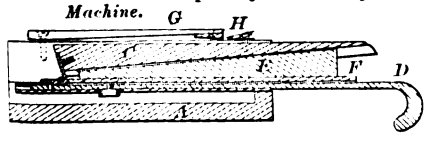

86967—J. N. Arvin—*Wrench.*

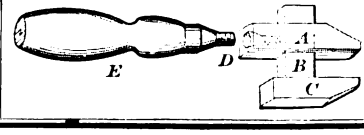

86971—I. B. Conklin—*Fire Arm.*

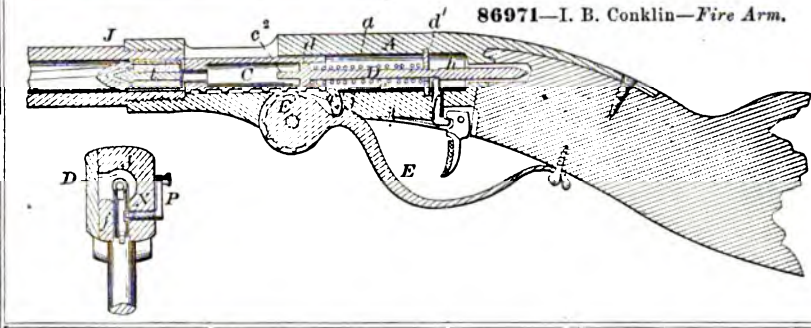

86972—H. Crane—*Connecting Artificial Teeth with Dental Plates.*

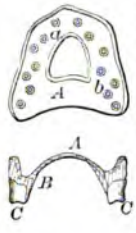

86974—J. M. Davidson—*Steam Engine.*

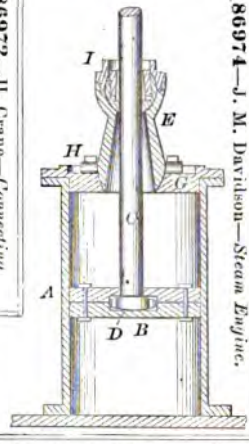

86973—Dakin & Butler—*Yarn Guide and Clearer.*

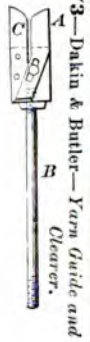

86975—A. J. Dyoo—*Weather Strip.*

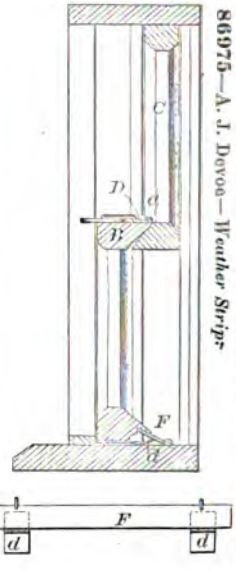

86976—D. F. Fetter—*Bolt.*

86981—Gooch & Jeffery—*For Opening and Closing Double Doors.*

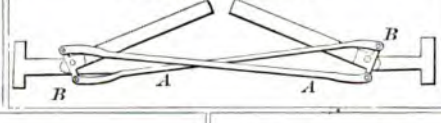

86977—G. Fischer—*Sheet Metal Balusters.*

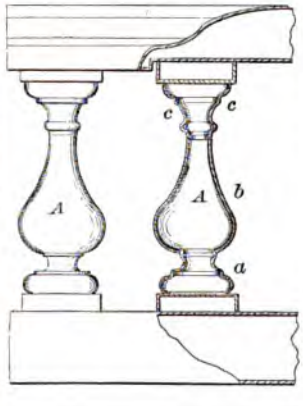

86978—F. Fredericks—*Butt.*

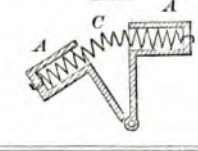

86982—W. A. Goranflo—*Sash Holder.*

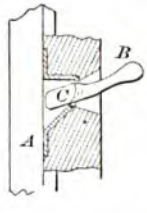

86979—T. H. Gary—*Dumping Wagon.*

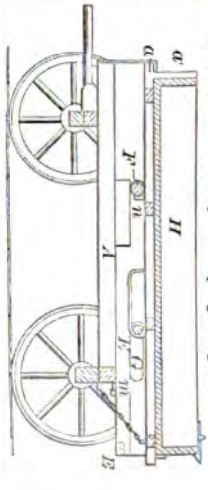

86941—Phillips & Richardson—*Corn Planter.*

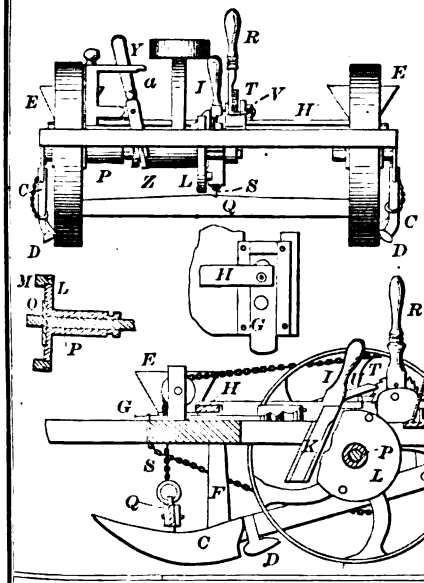

86945—H. Schauer—*Saw Set and Punch.*

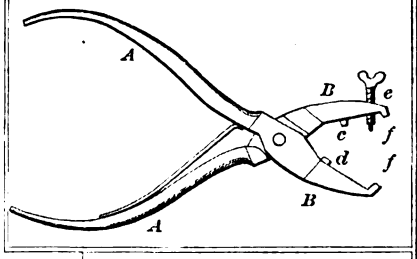

86947—I. S. Sheets—*Ditching Plow.*

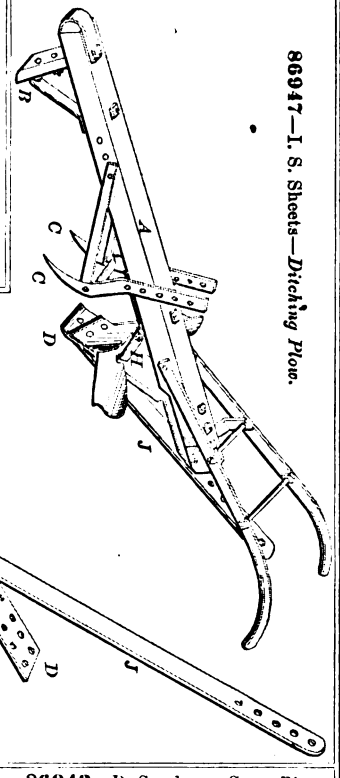

86948—J. J. Sherman—*For Evaporating Liquids.*

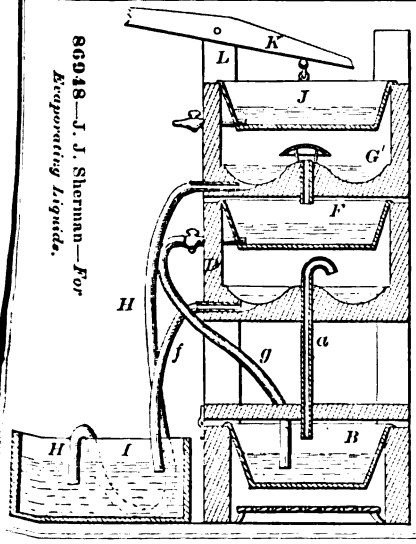

86943—D. Sanders—*Stove Pipe Damper.*

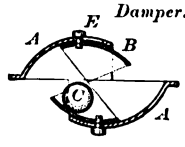

86942—F. W. Robinson—*Grain Separator.*

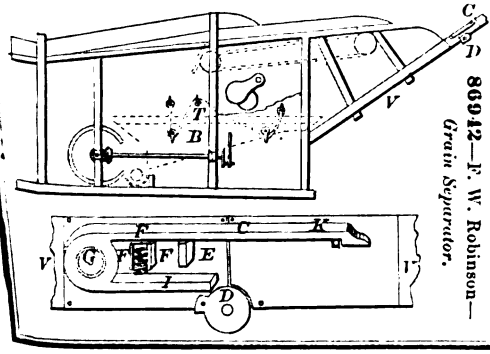

86946—C. W. Shattuck—*Shutter Worker.*

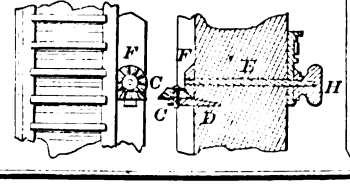

86949—G. Sickles—*Fluid Meter.*

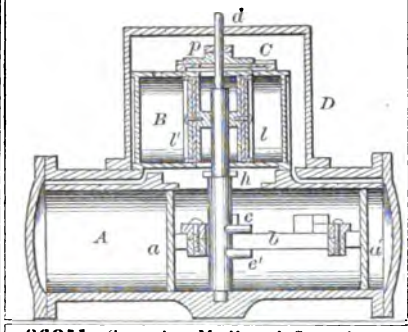

86950—M. D. Smith—*Seeding Machine and Cultivator.*

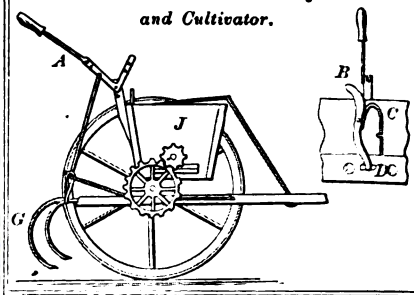

86951—Spangler, Madlem & Spangler—*Manure Drag.*

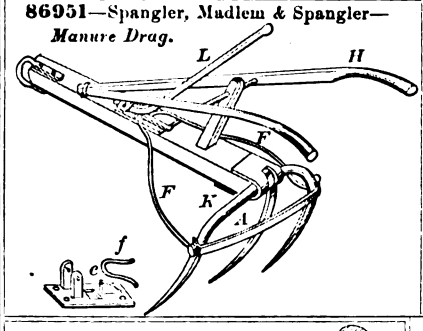

86952—C. F. Steel—*Revenue and Postage Stamp.*

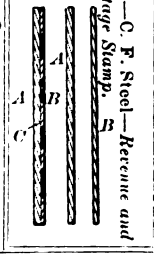

86953—B. W. Taugee—*Carding Machine.*

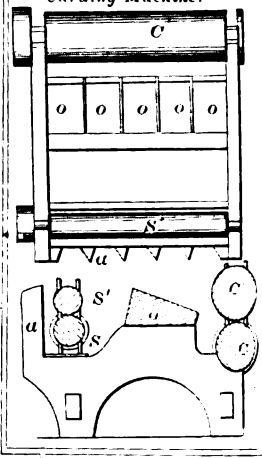

86956—A. Weed—*Boring Faucet.*

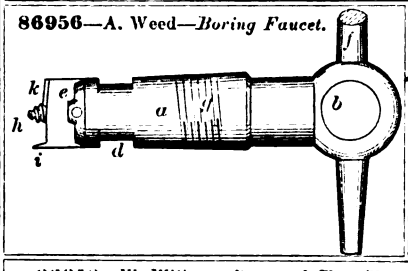

86955—C. D. Ulmer—*Attaching Heels to Boots.*

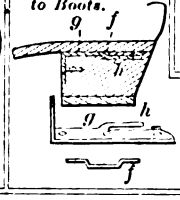

86954—B. W. Taugee—*Carding Machine.*

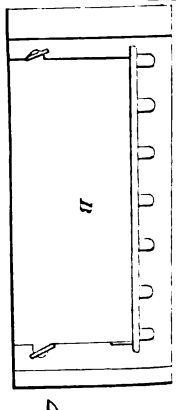

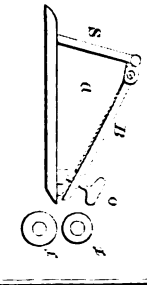

86958—W. Wilber—*Boot and Shoe Shave.*

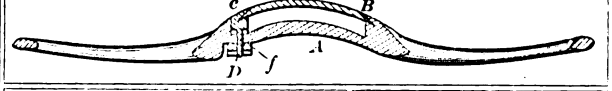

86957—A. Weissenborn—*Sewing Machine Treadle.*

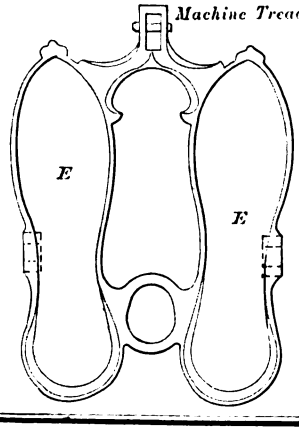

86959—Wilbur & Tuttle—*Carriage Axle.*

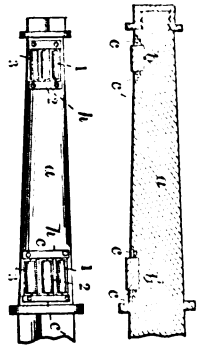

87001—Perrine & Conover—*Potato Assorter and Sifter.*

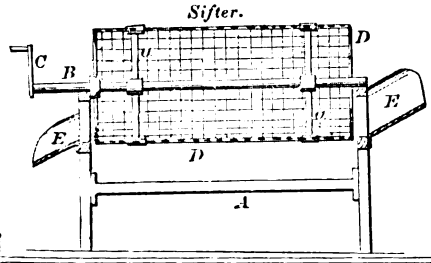

87003—J. P. Praul—*Beehive.*

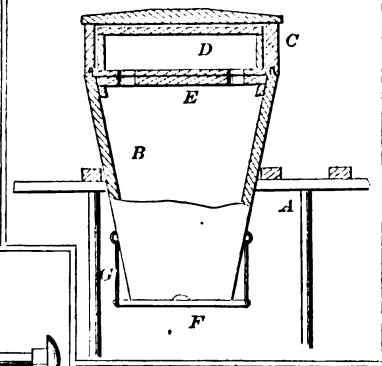

87001—C. D. Read—*Apple Corer and Cutter.*

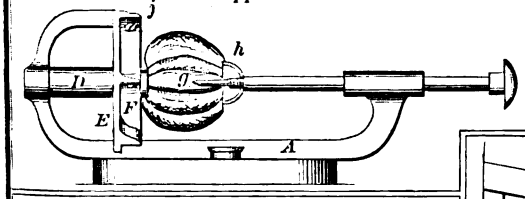

87006—J. Serrill—*Toy Savings Bank.*

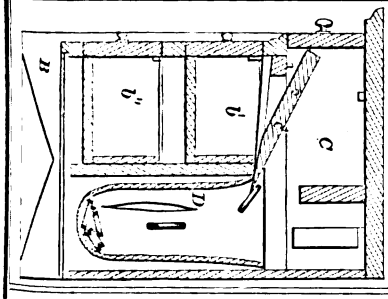

87005—S. & R. A. Semple—*Fur Polishing and Dressing Thread.*

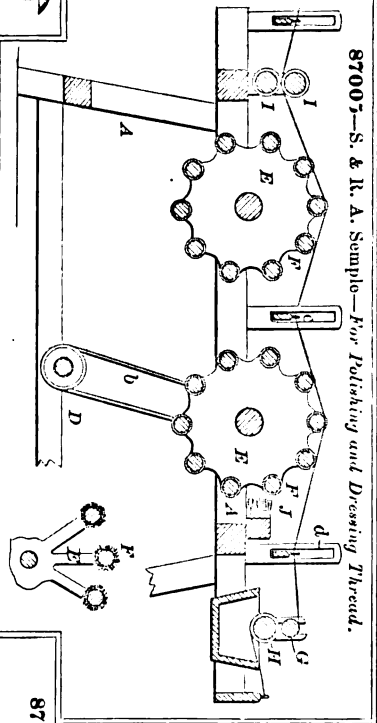

87008—D. Snow—*Recess Cutter for Setting Hinges.*

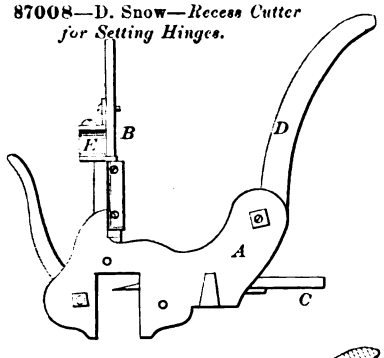

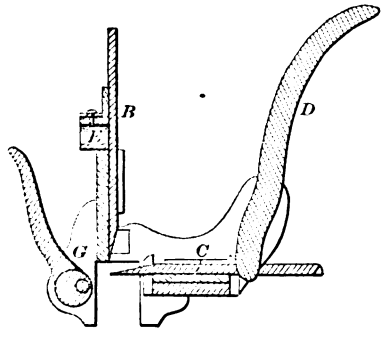

87007—T. Smith—*Concrete Pavement.*

87002—Power & Coyne—*Railway Car.*

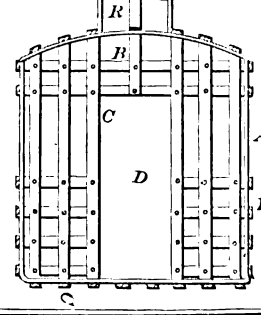

87009—C. W. Soule—*Shoe Supporter.*

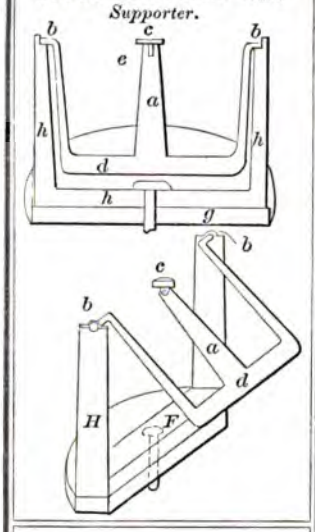

87010—Smith & Galbraith—*Pile Driver.*

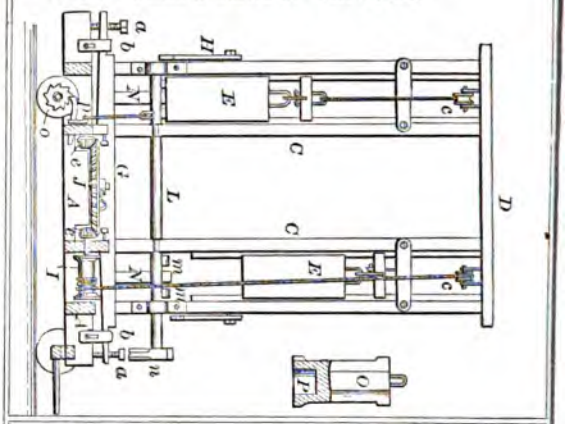

87011—J. F. Thomas—*For Swaging Rolls.*

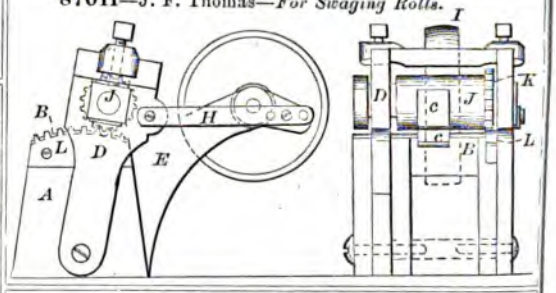

87012—H. Thompson—*Submarine Telescopic Lantern.*

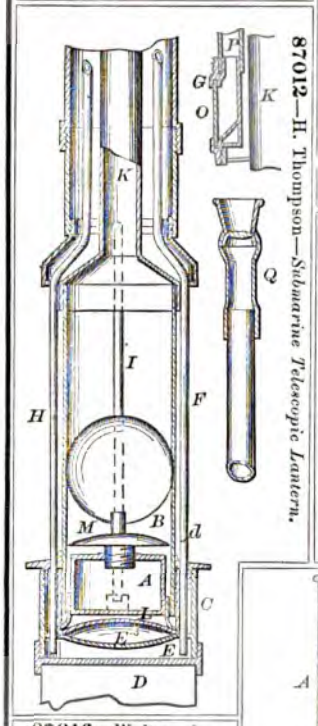

87013—W. S. Todd—*Washing Machine.*

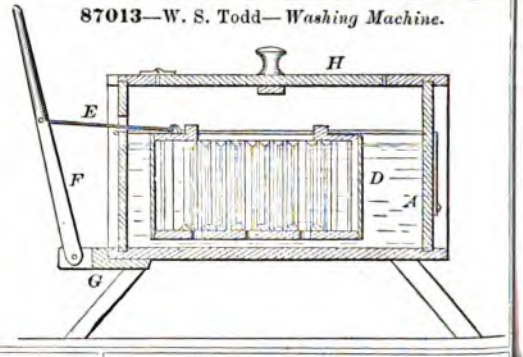

87014—W. C. Trowbridge—*Gas Heater.*

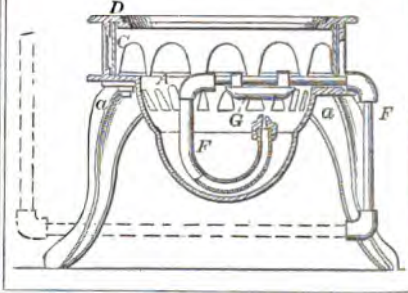

87015—S. T. Varian—*Frost Protector for Posts.*

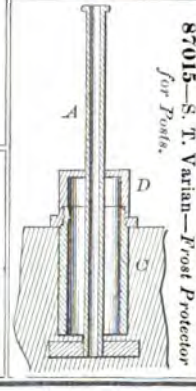

87016—Walters & Shaffer—*Column.*

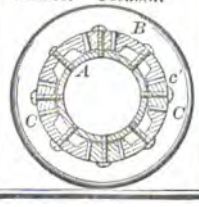

86983—I. G. Hotchkiss—*Blank for Cutlery Handles.*

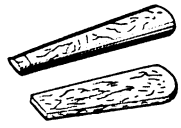

86984—N. Ingersoll—*Reefing Sails.*

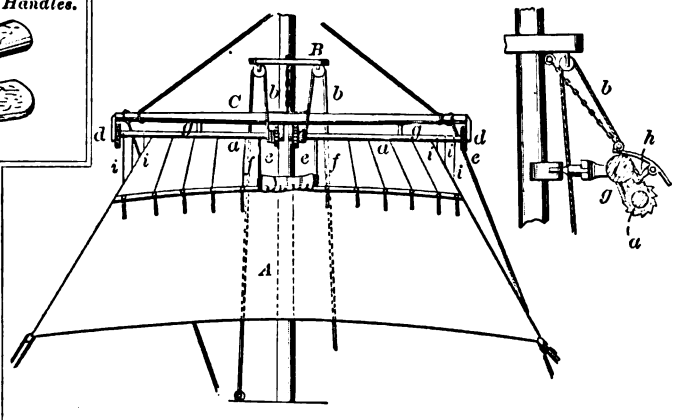

86987—A. D. Laws—*Lamp Shade*

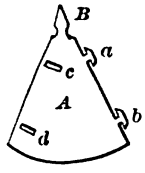

86992—R. R. McGregor—*Corn and Cotton Seed Planter.*

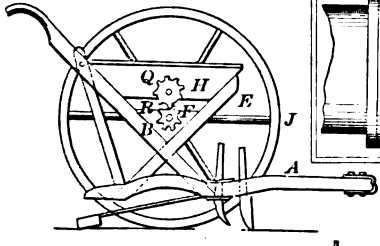

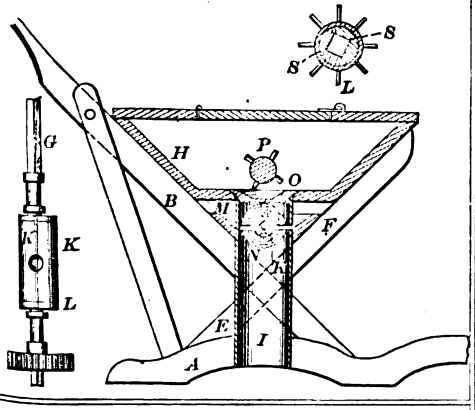

86988—R. C. M. Lovell—*Rock Drill.*

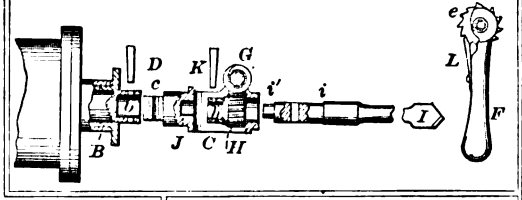

86985—J. J. Kimball—*Flood Gate.*

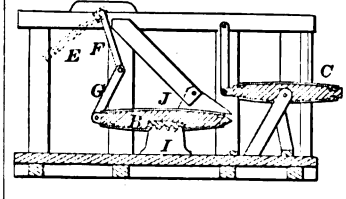

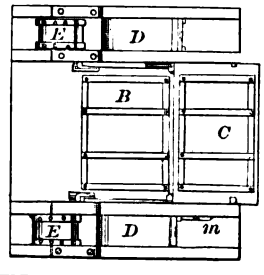

86991—H. D. McGeorge—*Picture Case and Cane.*

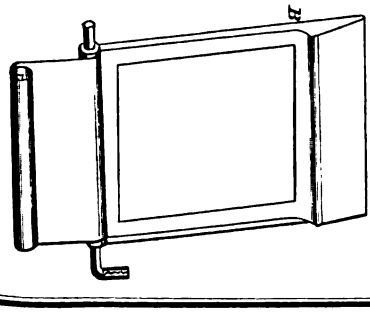

86993—W. S. McNeil—*Toy Spring and Arrow.*

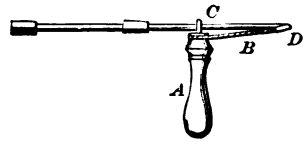

87024—D. T. Briggs—*Lamp Burner.*

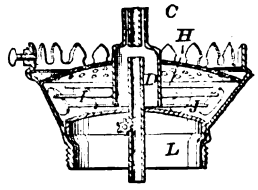

87026—I. H. Chappell—*Wagon Seat.*

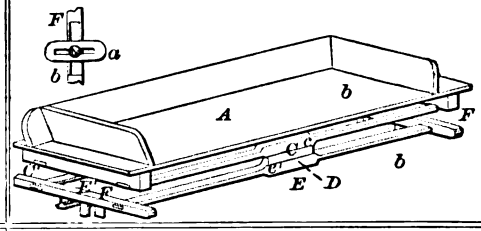

87028—G. T. Cooley—*Corn Planter.*

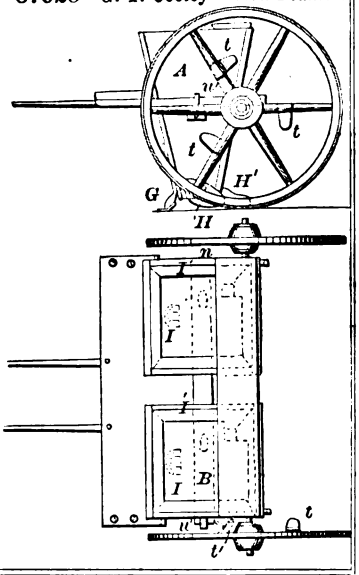

87027—M. Clifton—*Churn.*

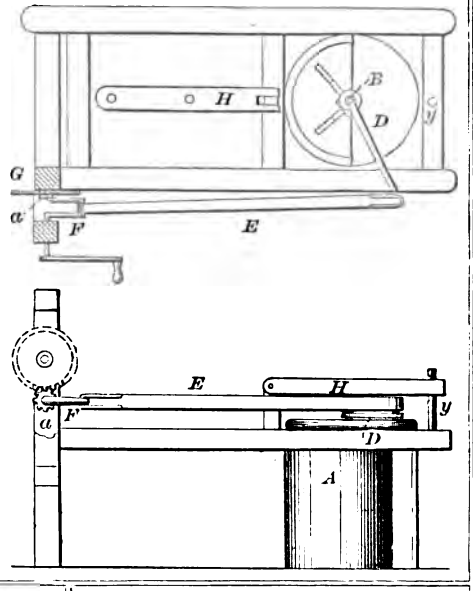

87029—H. G. Dayton—*For Redistilling Whisky and other Spirits.*

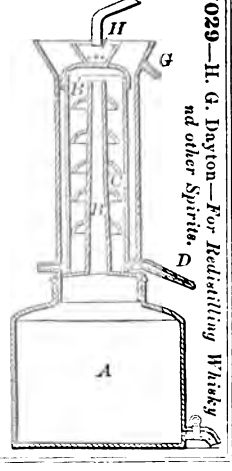

87025—Chandler & Estell—*Desk and Seat.*

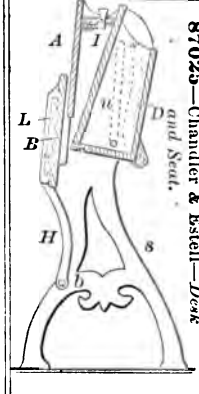

87030—S. B. Driggs—*Lamp for Sheet Piling.*

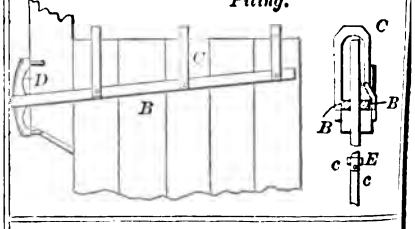

78033—S. F. Estell—*Velocipede.*

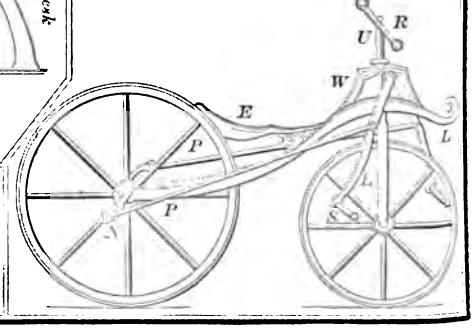

87032—A. E. Elmer—*Construction of Table Cutlery.*

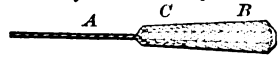

87034—J. Farcot—*Steam Engine Governor.*

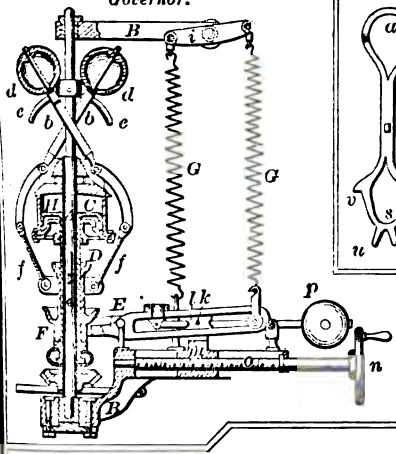

87035—D. Fasig—*Hay Knife and Pruner.*

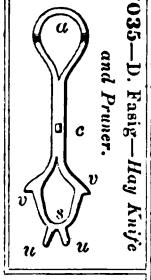

87037—J. C. Fuller—*Plant Setting Device.*

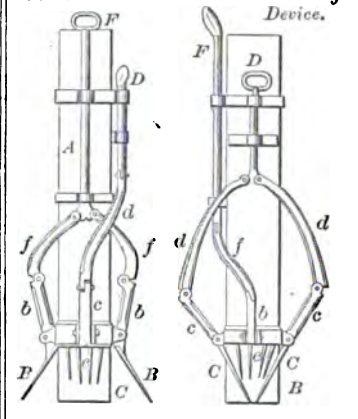

87040—S. A. Gould—*Gate.*

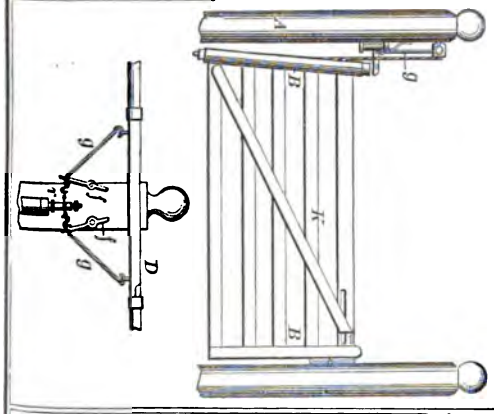

87043—Hambleton & Herthel—*For Moulding Clay.*

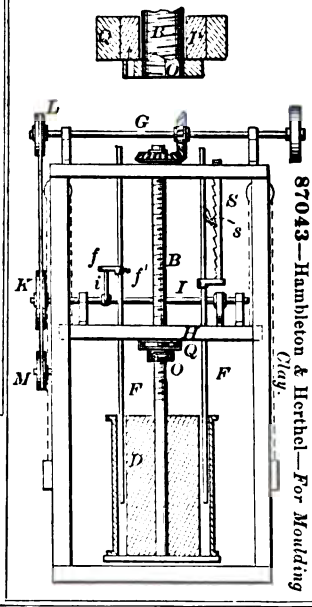

87041—E. H. Grant—*Cooling the Atmosphere in Rooms and other Enclosures.*

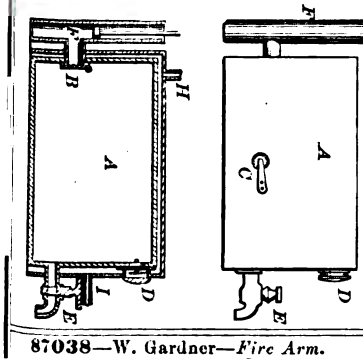

87039—S. Gardiner, Jr.—*Gas Burner.*

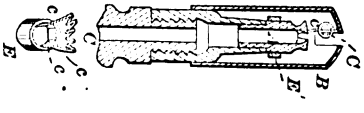

87038—W. Gardner—*Fire Arm.*

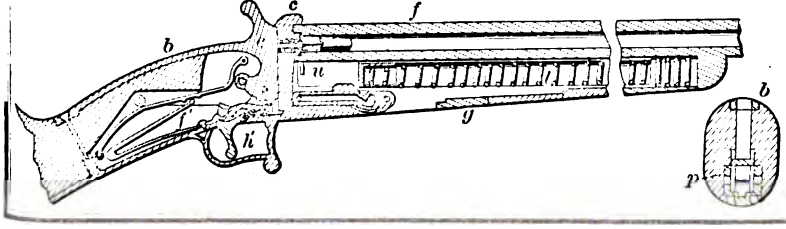

87047—M. Howe—*Thill Coupling.*

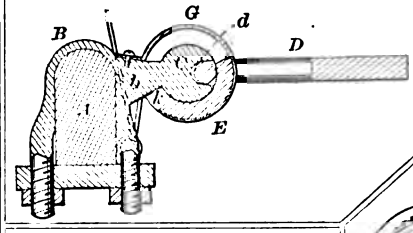

87044—Harding & Soley—*Calender for Paper and other Fabrics.*

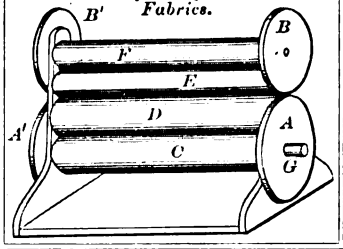

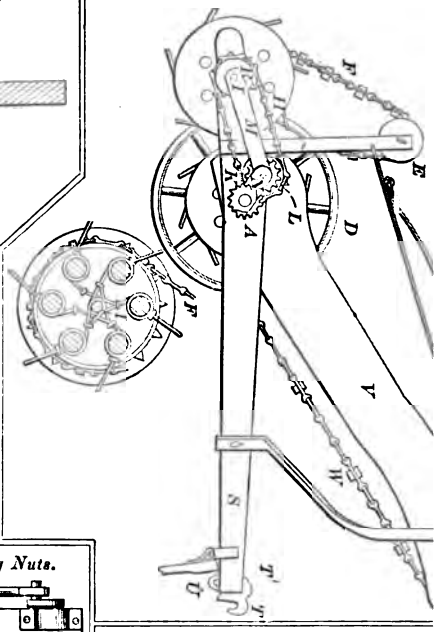

87046—W. Horsfall—*For Making Nuts.*

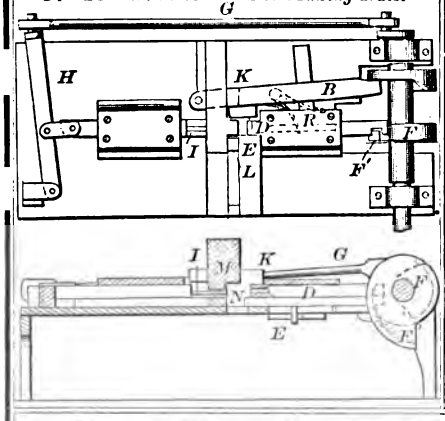

87051—J. G. Kimberlin—*Horse H*

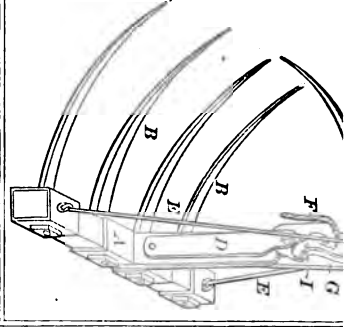

87048—L. H. Johnson—*Har*

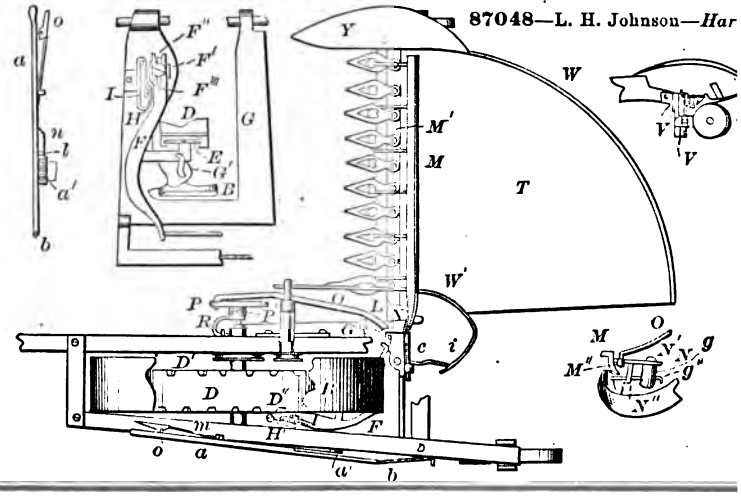

87049—G. C. & P. B. Jones—*Cheese Cutter.*

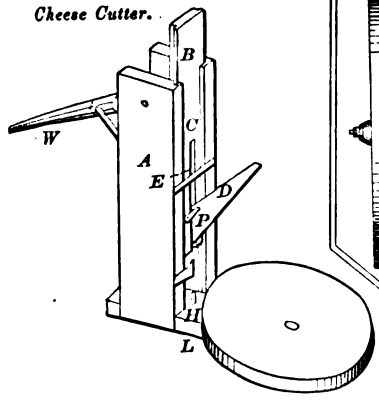

87055—J. M. Lunsford—*Vehicle.*

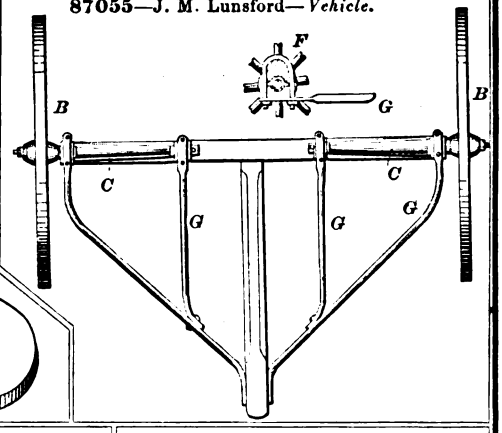

87056—W. De C. May—*Grain Binder.*

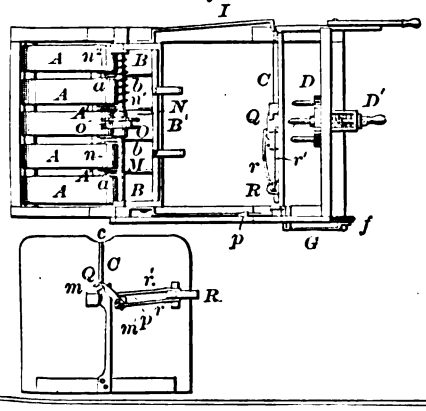

87057—W. C. McIntire—*Thread Cutter and Spool.*

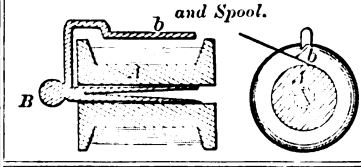

87052—B. Kuhns—*Grain Drill.*

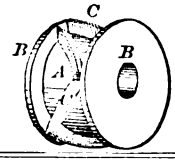

87053—E. G. Lamson—*For Cutting and Channeling Stone.*

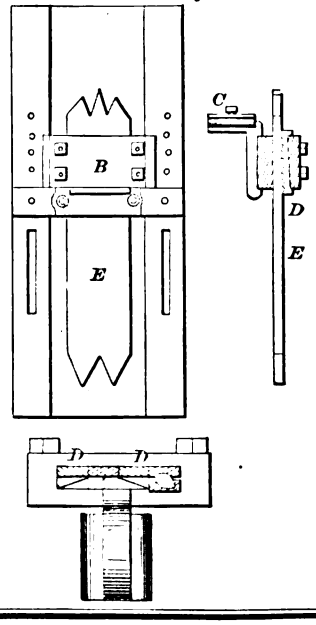

87054—J. W. Larimore—*Caster and Cake Basket.*

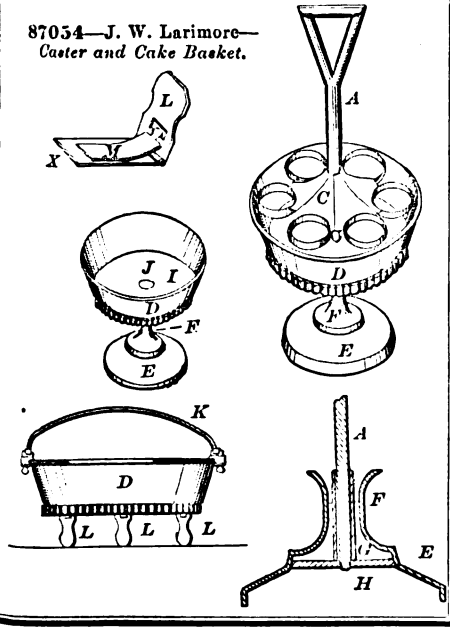

87058—L. A. Merriam—*Fire Arm.*

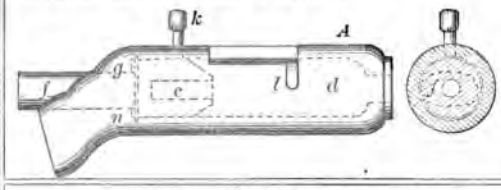

87064—J. R. Pilkay—*Churn.*

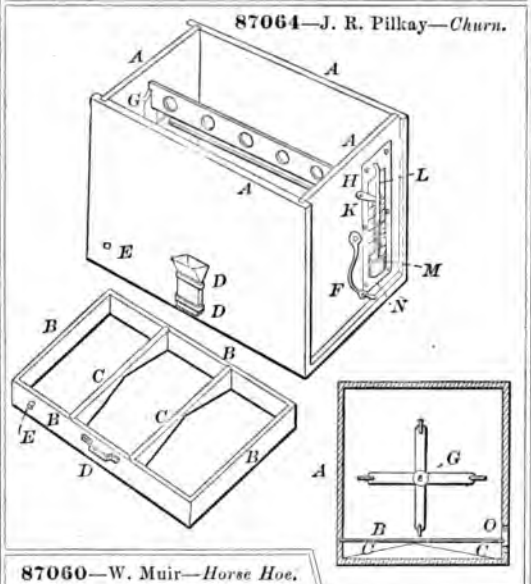

87060—W. Muir—*Horse Hoe.*

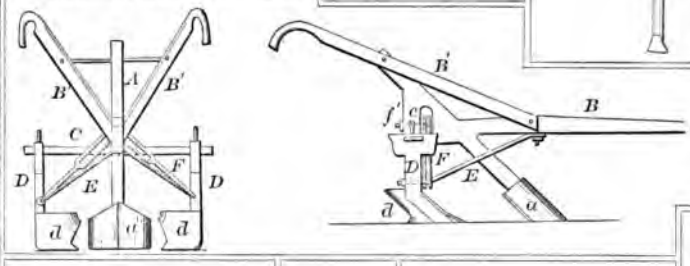

87059—P. Meyers—*Bag Holder.*

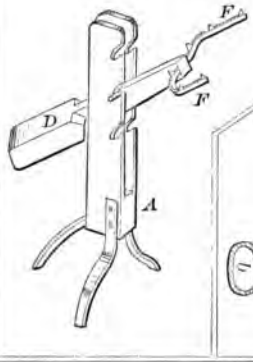

87063—C. W. Palmer—*Shoe.*

87065—W. Redhead—*Gate Latch.*

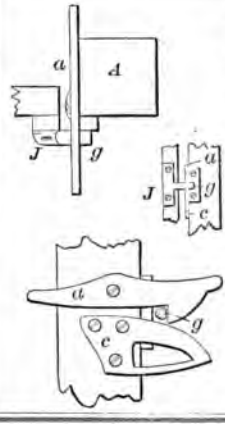

87062—G. B. Paine—*Pegging Awl.*

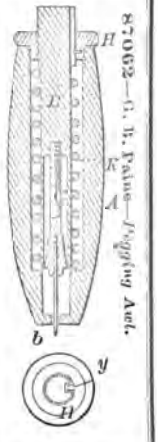

87061—R. Nutty—*Rock Drilling Machine.*

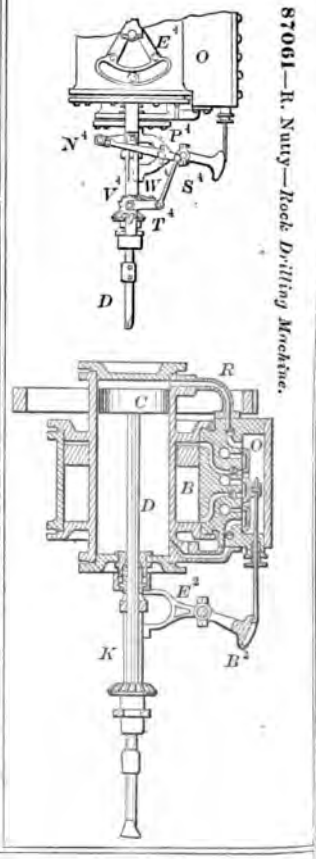

87034—J. Farcot—*Steam Engine Governor.*

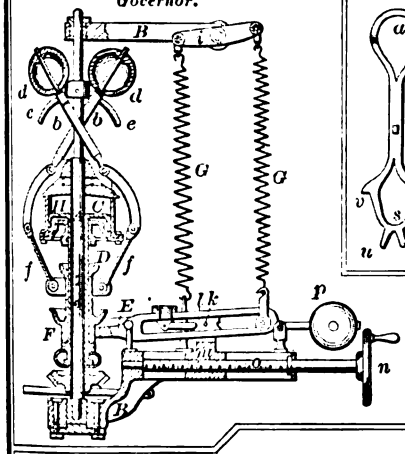

87035—D. Easig—*Hay Knife and Pruner.*

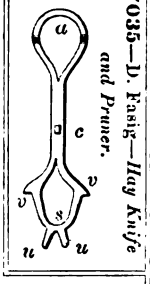

87037—J. C. Fuller—*Plant Setting Device.*

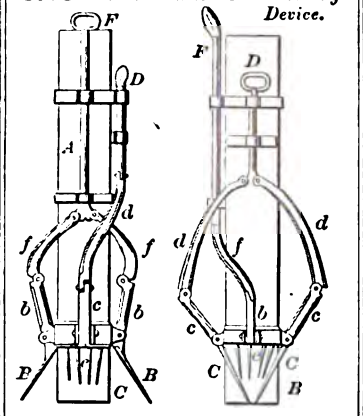

87040—S. A. Gould—*Gate.*

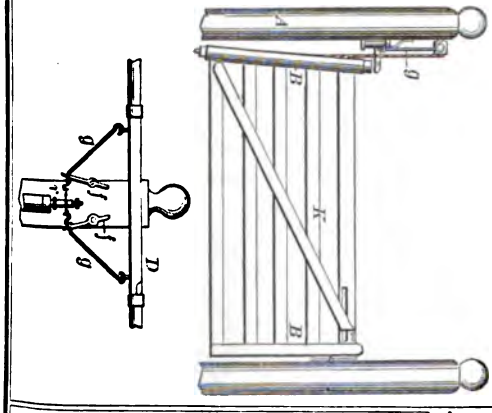

87043—Hambleton & Herthel—*For Moulding Clay.*

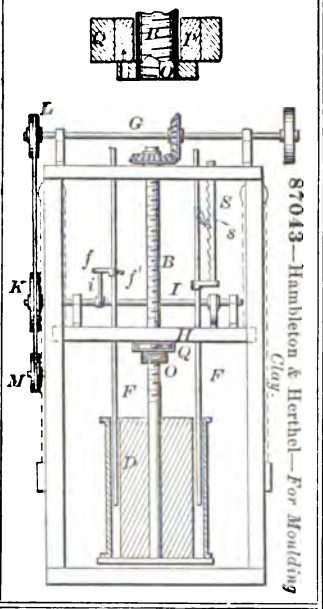

87041—E. H. Grant—*Cooling the Atmosphere in Rooms and other Enclosures.*

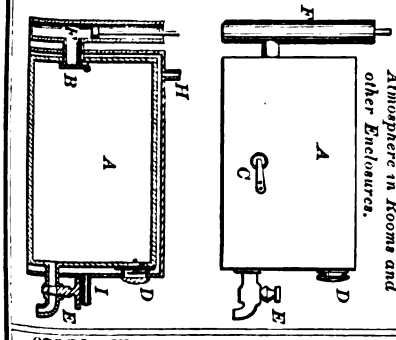

87039—S. Gardiner, Jr.—*Gas Burner.*

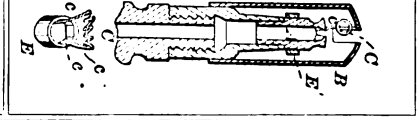

87038—W. Gardner—*Fire Arm.*

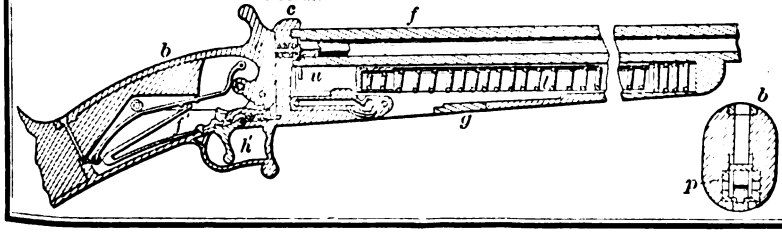

87058—L. A. Merriam—*Fire Arm.*

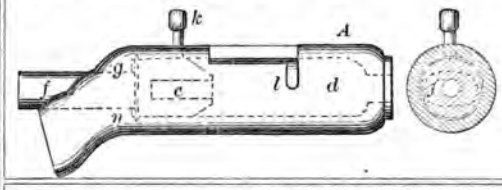

87061—R. Nutty—*Rock Drilling Machine.*

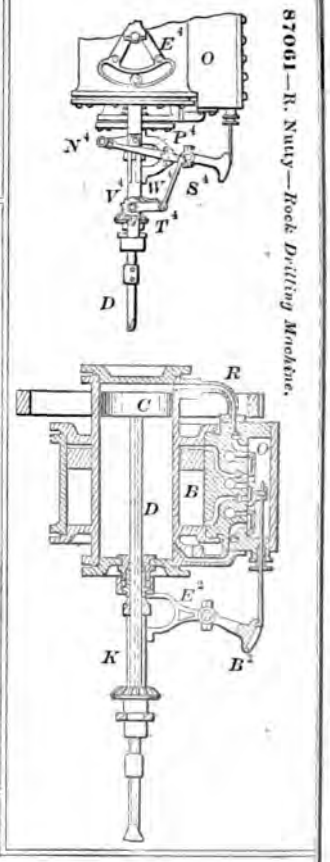

87064—J. R. Pilkay—*Churn.*

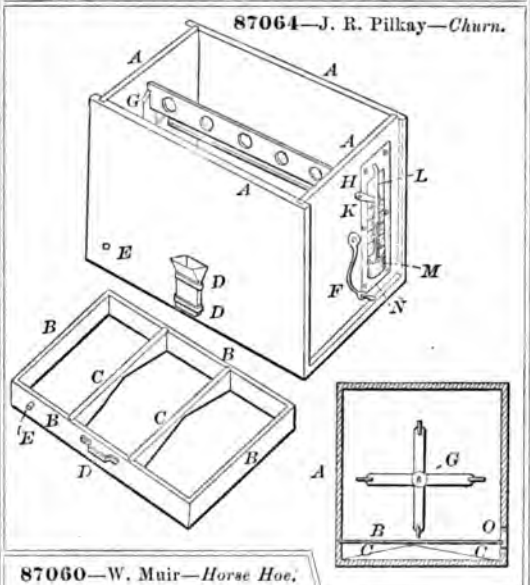

87060—W. Muir—*Horse Hoe.*

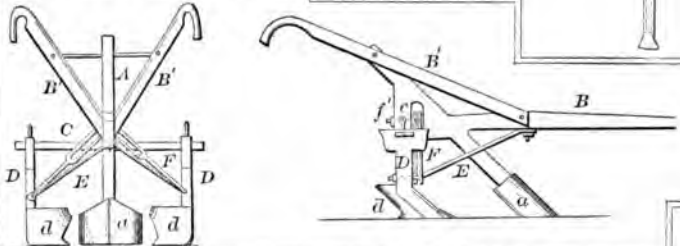

87059—P. Meyers—*Bag Holder.*

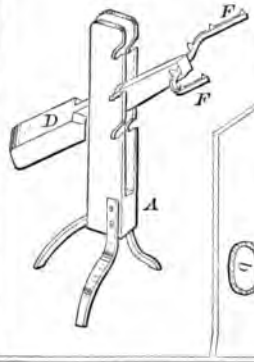

87063—C. W. Palmer—*Shoe.*

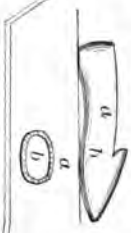

87065—W. Redhead—*Gate Latch.*

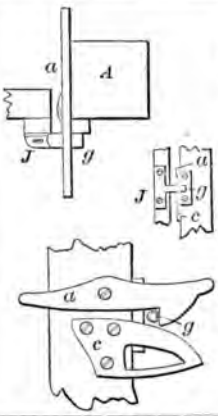

87062—G. B. Paine—*Pegging Awl.*

87049—G. C. & P. B. Jones—*Cheese Cutter.*

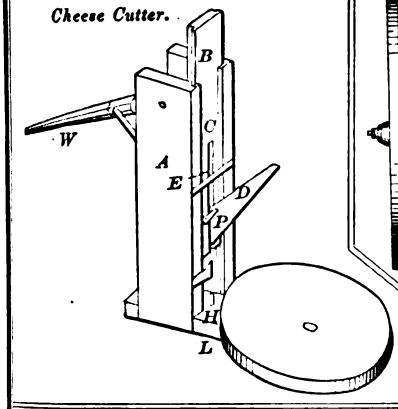

87055—J. M. Lunsford—*Vehicle.*

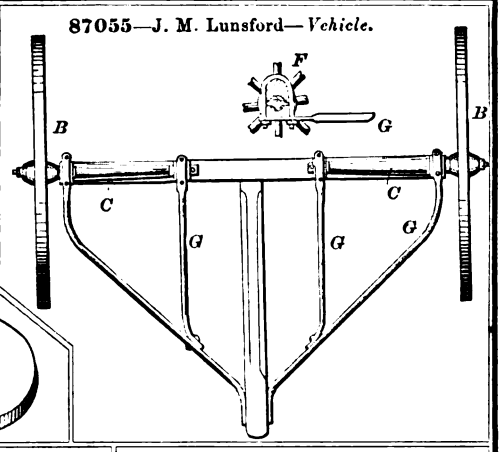

87056—W. De C. May—*Grain Binder.*

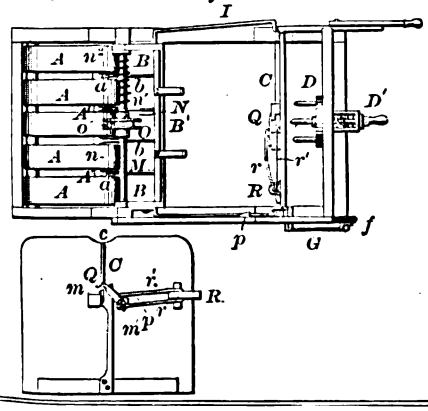

87057—W. C. McIntire—*Thread Cutter and Spool.*

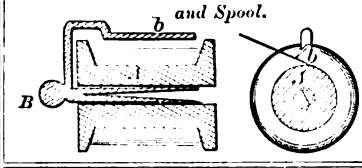

87052—B. Kuhns—*Grain Drill.*

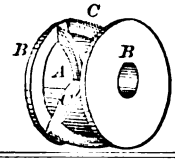

87053—E. G. Lamson—*For Cutting and Channeling Stone.*

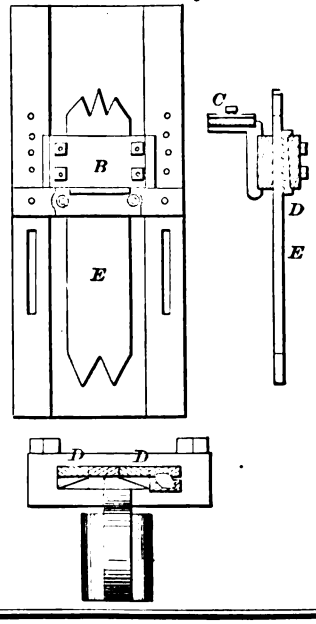

87054—J. W. Larimore—*Caster and Cake Basket.*

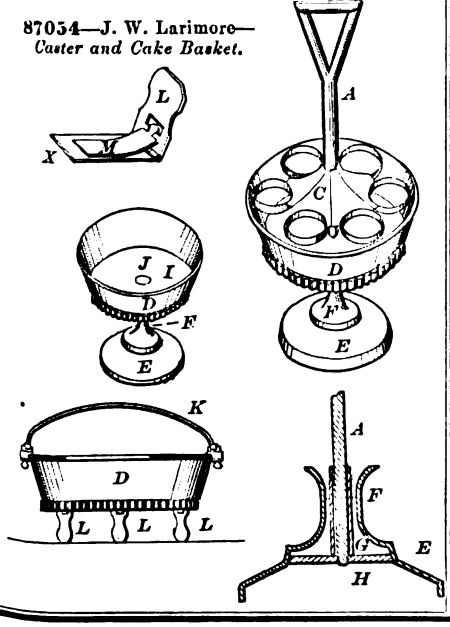

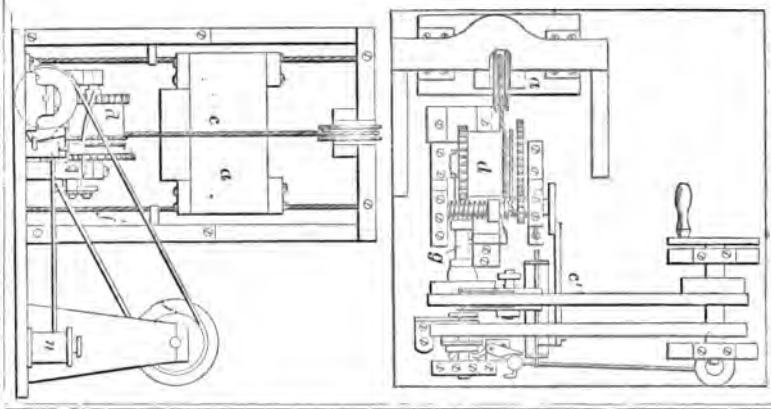

87083—O. Tufts, Jr.—*Elevator.*

87087—G. S. Dwight—*For Coating Cloth with India Rubber and other Substances.*

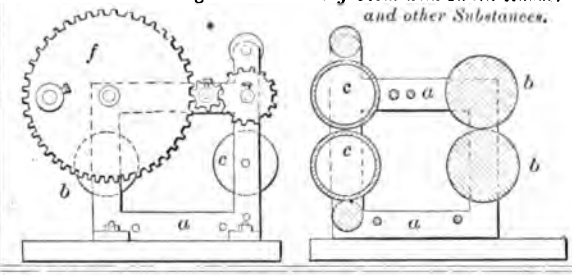

87085—J. S. White—*Stove.*

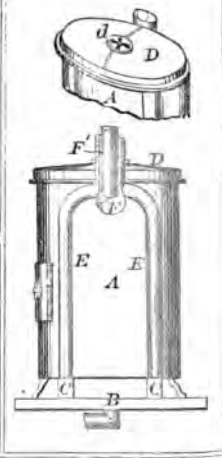

87084—P. H. V. Weyde—*For the Manufacture of Ice.*

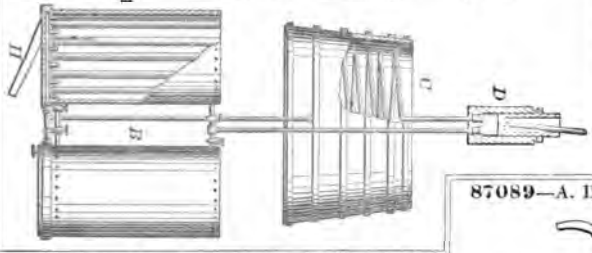

87089—A. D. Brown, Sr.—*Cotton Seed Planter.*

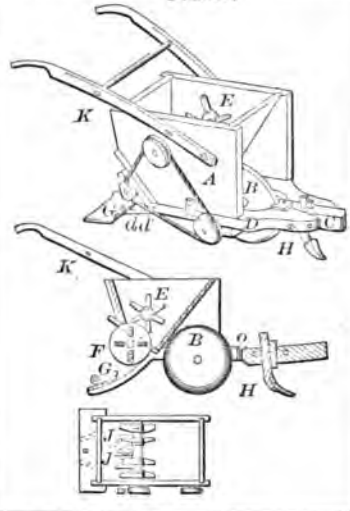

87086—T. L. Wilson—*Railway Car Truck.*

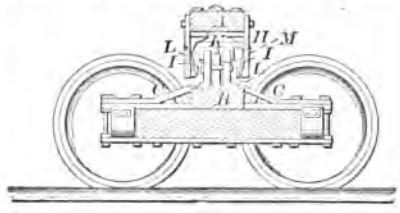

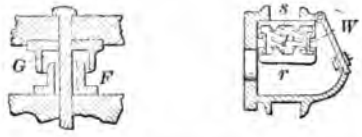

87090—W. C. Bruson—*Sugar Press.*

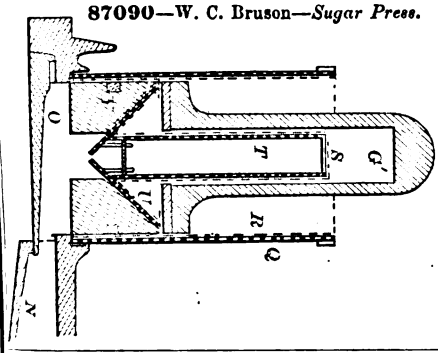

87092—P. Cook—*Saw Teeth.*

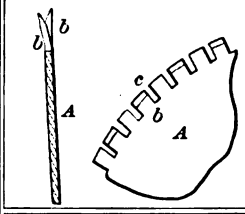

87093—A. Crawford—*Buckwheat Huller.*

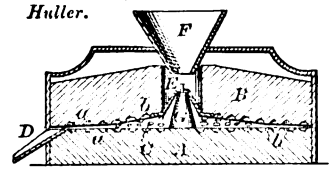

87091—E. N. Cleaves—*Mould for Casting Metals.*

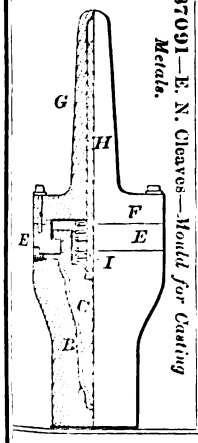

87097—D. Fisher—*Clamp for Elevating Well Tubes.*

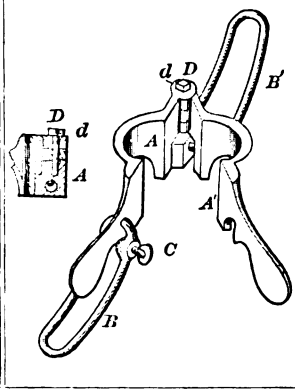

87095—W. Duncan—*Door Spring.*

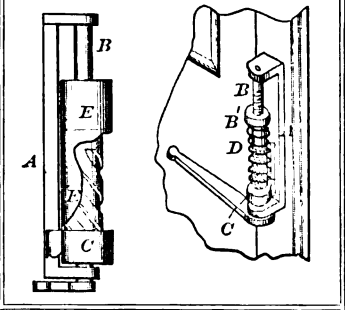

87096—B. Erbe—*Knob Latch.*

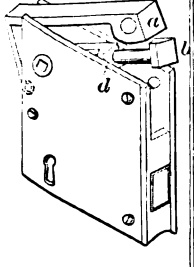

87099—E. Hampton—*Fireplace.*

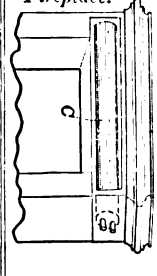

87098—W. A. Goodwin—*Railway Freight Car.*

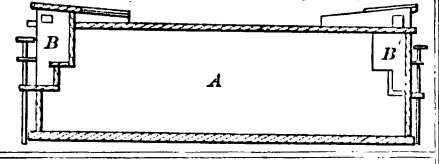

87102—G. M. Hopkins—*Low Water Indicator.*

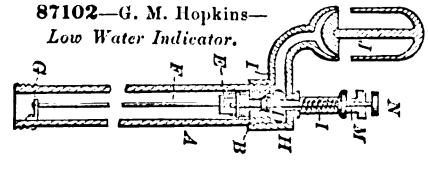

87100—G. M. D. & B. E. Harreld—*Wood Sawing Machine.*

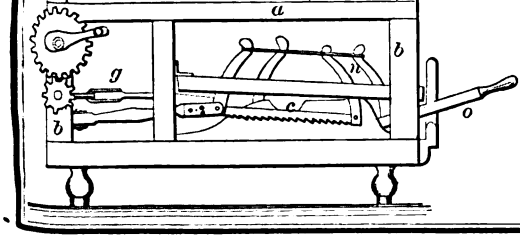

87101—J. Harris—*Cultivator.*

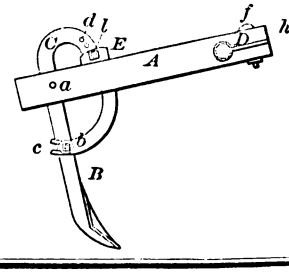

87103—J. W. Hopkins—*For Brushing Hats.*

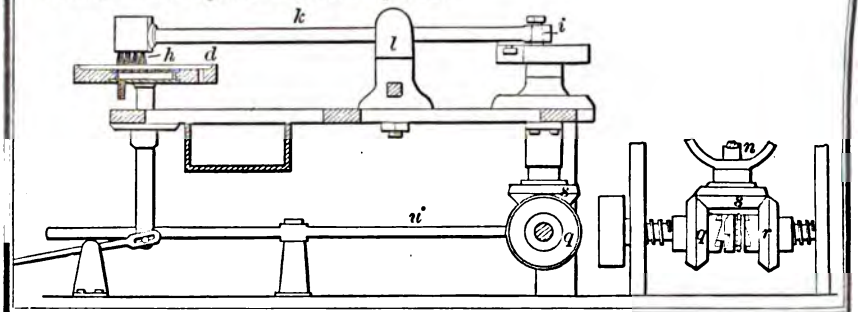

87104—H. B. Leach—*Fluid Meter.*

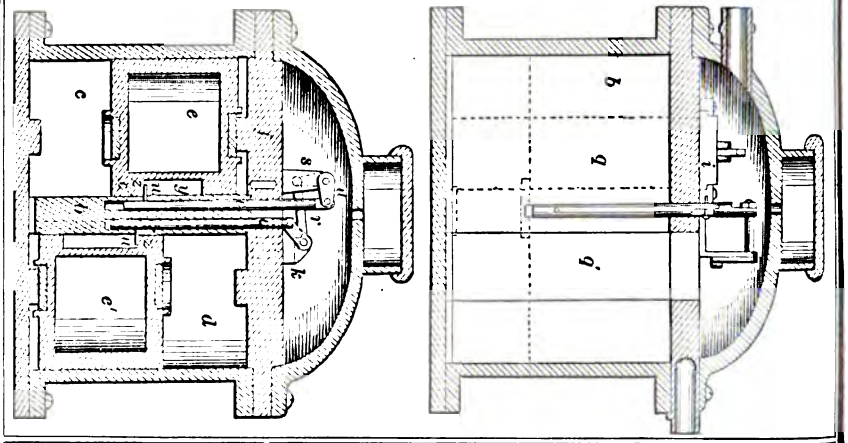

87107—O. Morse—*Bathing Dress.*

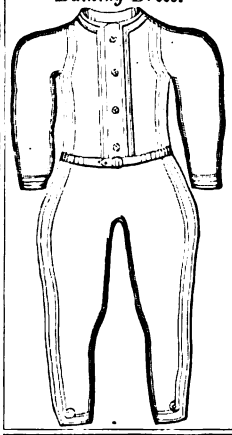

87106—Moore & C. B. & G. B. Garlinghouse—*Hay Raker and Loader.*

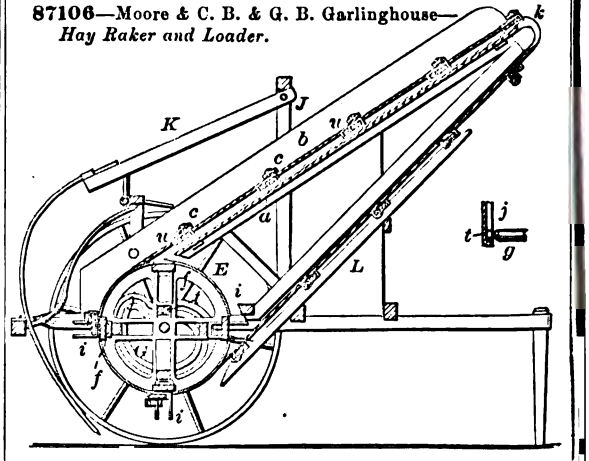

87105—W. T. Maddocks—*Mast Hoop.*

87108—J. Naughton—*Rotary Pump.*

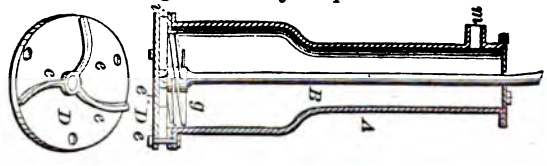

87074—P. I. & P. Schmitt—*Drill Teeth Setting.*

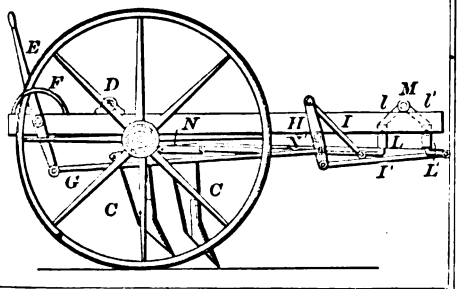

87070—Sumner & Youmans—*Rotary Steam Engine.*

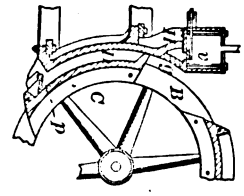

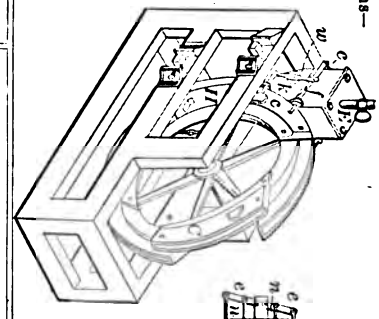

87077—Sutton & Crowell—*Elevated Railway.*

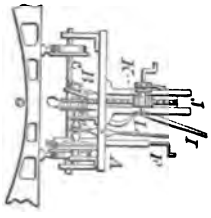

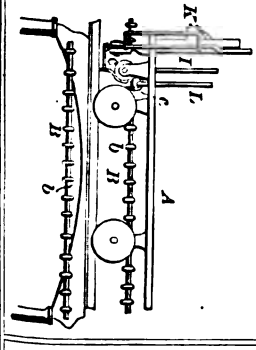

87078—H. C. Swift—*Harness Pad.*

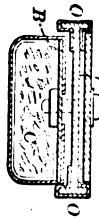

87081—C. Towns—*Belt Clasp.*

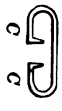

87079—H. Thomas—*Lubricator.*

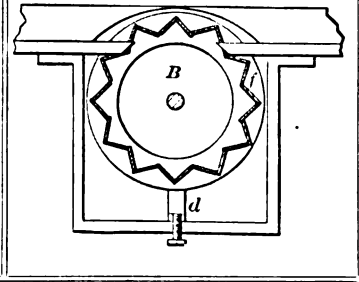

87082—D. Townsend—*Folding Card Globe.*

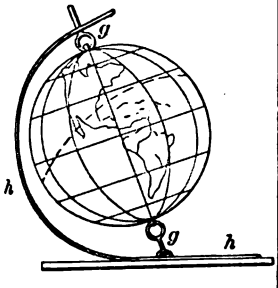

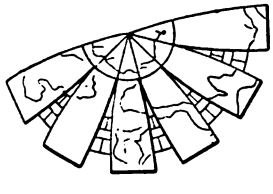

87080—J. B. Tipton—*Cultivator.*

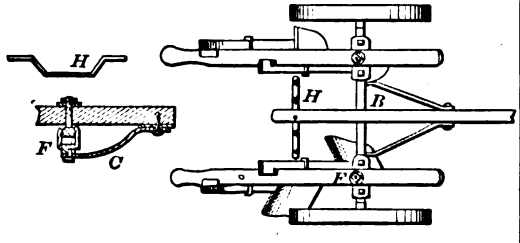

87118—J. Sheffield—*Fluid Meter.*

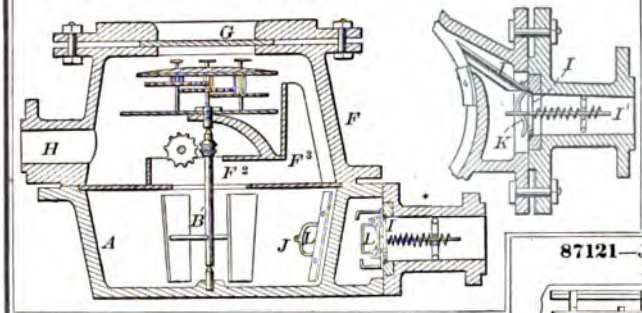

87125—W. Tibbals—*Cartridge Case.*

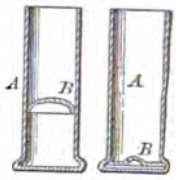

87121—J. Stephenson—*Street Car.*

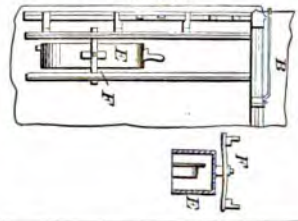

87120—J. Stephenson—*Street Car.*

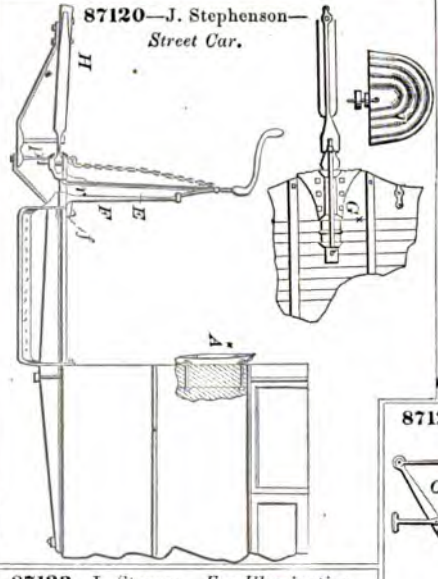

87119—S. Snyder—*Tanners' Leach.*

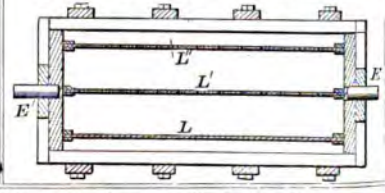

87122—J. Stephenson—*Brake for Horse Railroad Cars.*

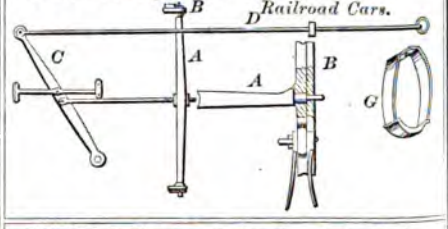

87123—L. Stevens—*For Illuminating Gas.*

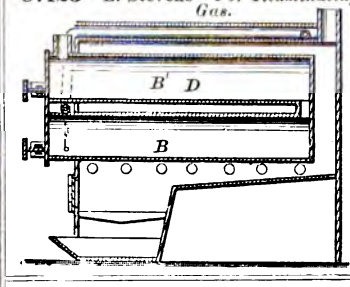

87126—T. Walter—*Safety Guard for Railway Cars.*

Fig. 1

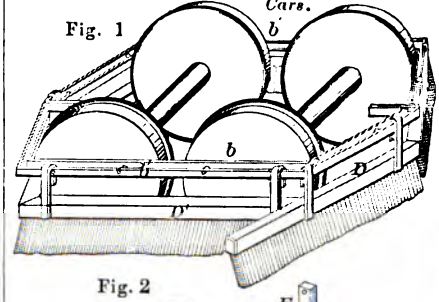

Fig. 2

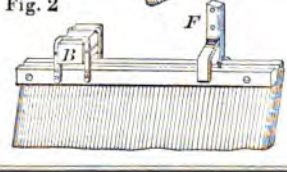

87124—A. B. Thompson—*Railway Frog.*

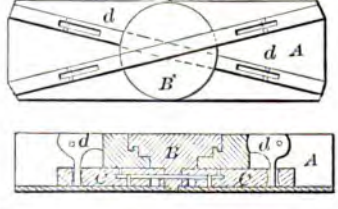

87090—W. C. Bruson—*Sugar Press.*

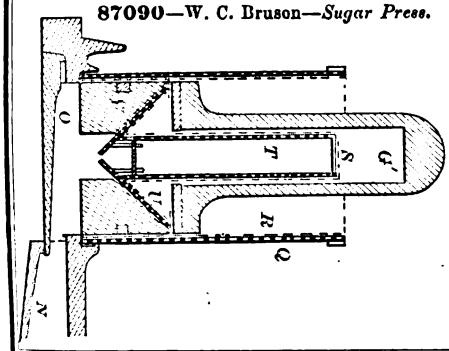

87092—P. Cook—*Saw Teeth.*

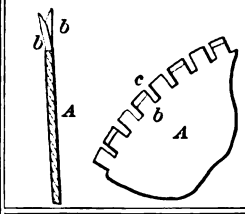

87093—A. Crawford—*Buckwheat Huller.*

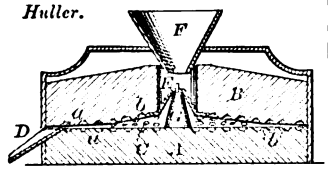

87091—E. N. Cleaves—*Mould for Casting Metals.*

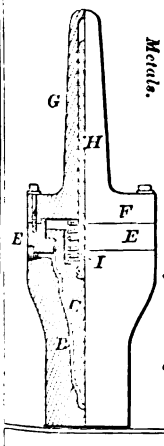

87097—D. Fisher—*Clamp for Elevating Well Tubes.*

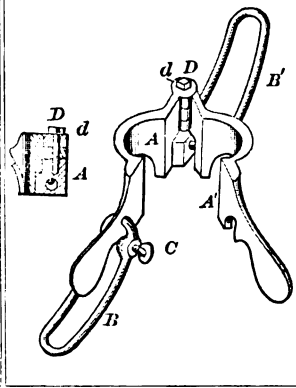

87095—W. Duncan—*Door Spring.*

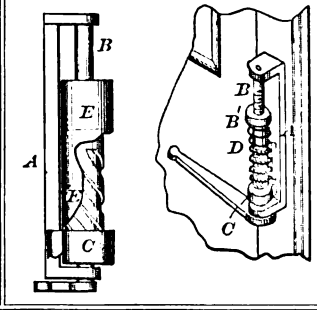

87096—B. Erbe—*Knob Latch.*

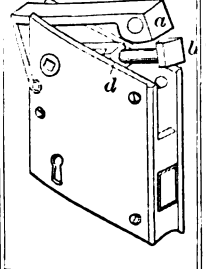

87099—E. Hampton—*Fireplace.*

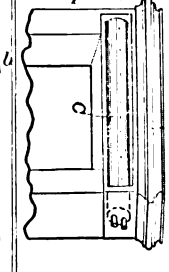

87098—W. A. Goodwin—*Railway Freight Car.*

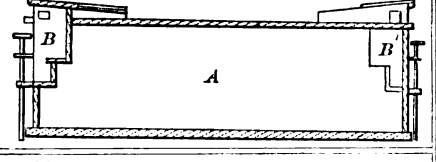

87102—G. M. Hopkins—*Low Water Indicator.*

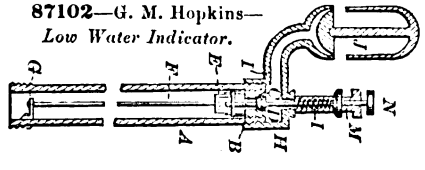

87100—G. M. D. & B. E. Harreld—*Wood Sawing Machine.*

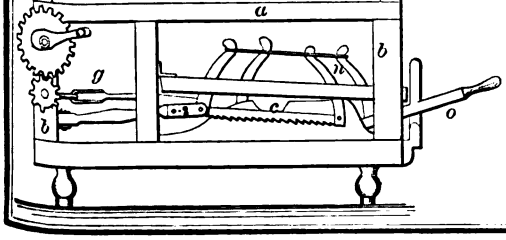

87101—J. Harris—*Cultivator.*

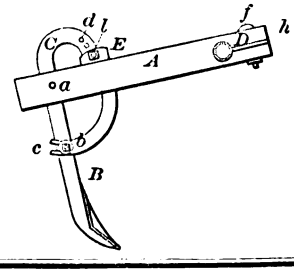

87118—J. Sheffield—*Fluid Meter.*

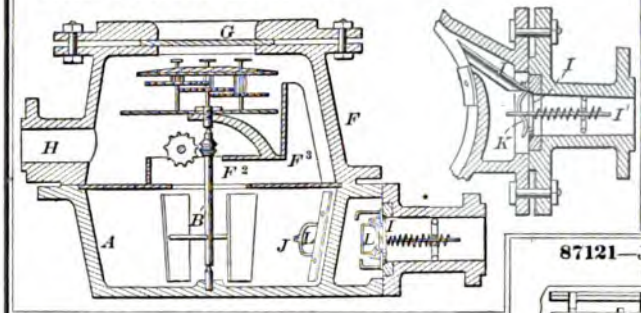

87125—W. Tibbals—*Cartridge Case.*

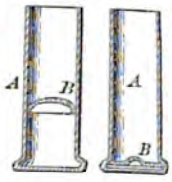

87121—J. Stephenson—*Street Car.*

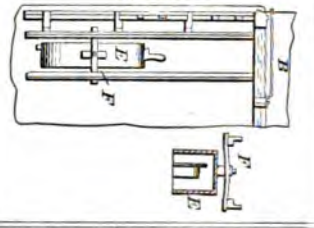

87120—J. Stephenson—*Street Car.*

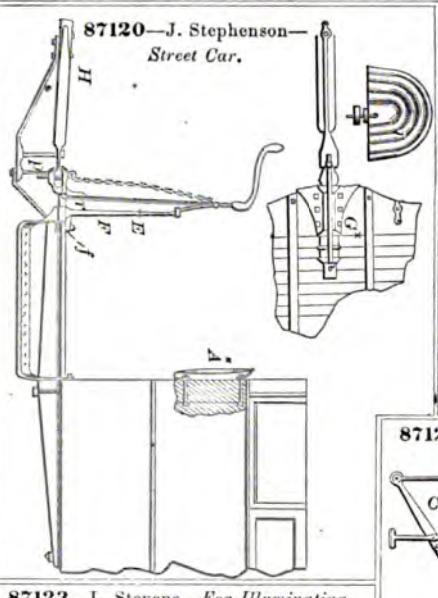

87119—S. Snyder—*Tanners' Leach.*

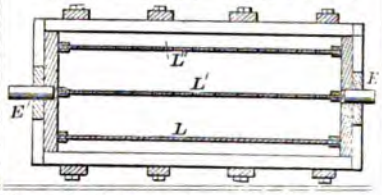

87122—J. Stephenson—*Brake for Horse Railroad Cars.*

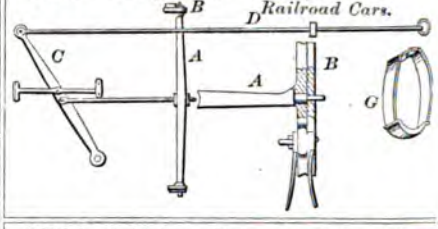

87123—L. Stevens—*For Illuminating Gas.*

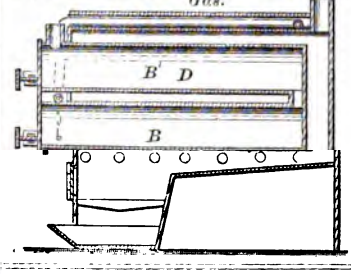

87126—T. Walter—*Safety Guard for Railway Cars.*

Fig. 1

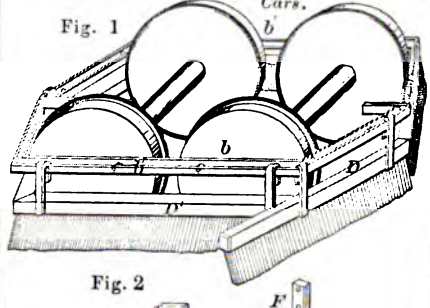

Fig. 2

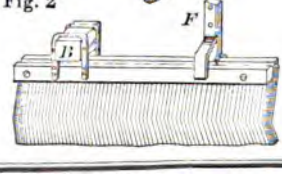

87124—A. B. Thompson—*Railway Frog.*

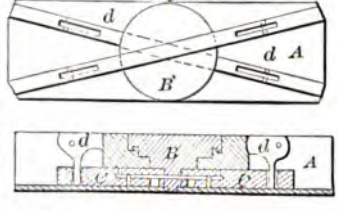

87139—F. Burghardt—*Manufacture of Paper Pulp.*

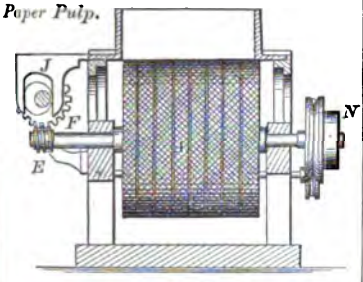

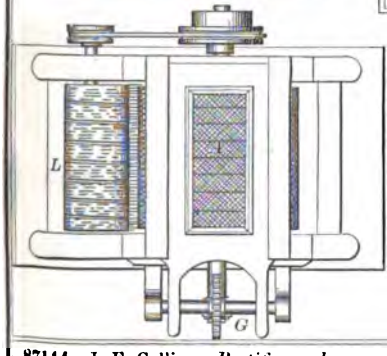

87143—D. H. Chamberlain—*Hoisting Apparatus.*

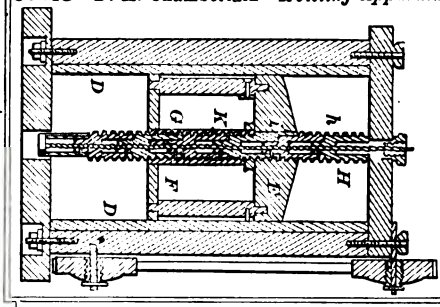

87147—De W. C. Cooley—*Churn.*

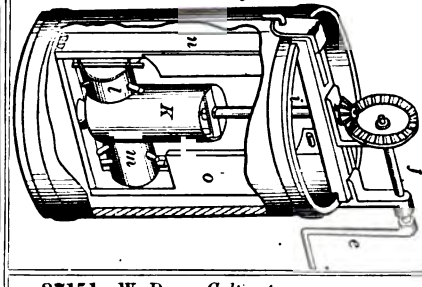

87151—W. Day—*Cultivator.*

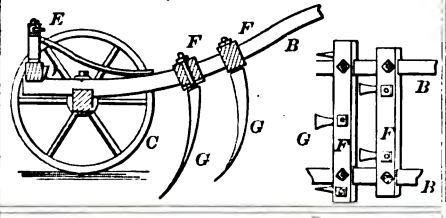

87144—J. F. Collins—*Rectifier and Condenser for Alcoholic and other Spirits.*

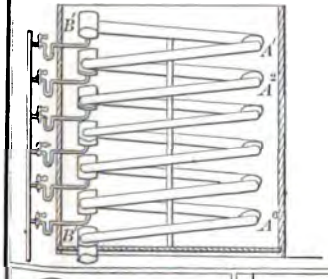

87145—E. Colvin—*Feather Renovator.*

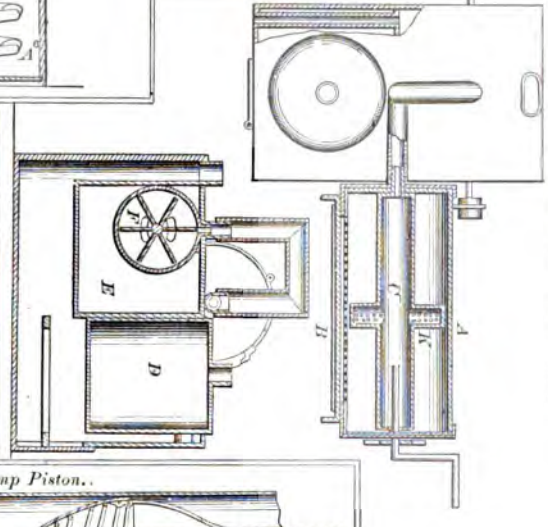

87146—J. Cook—*Screw Collar for Connecting Covers to Glass Vessels.*

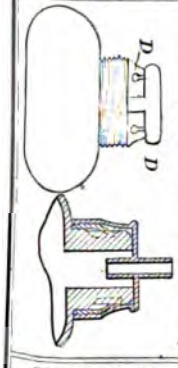

87148—S. Crowell—*Pump Piston.*

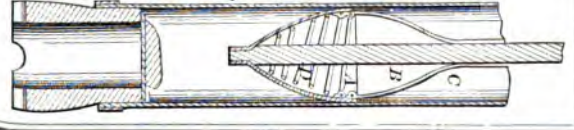

87118—J. Sheffield—*Fluid Meter.*

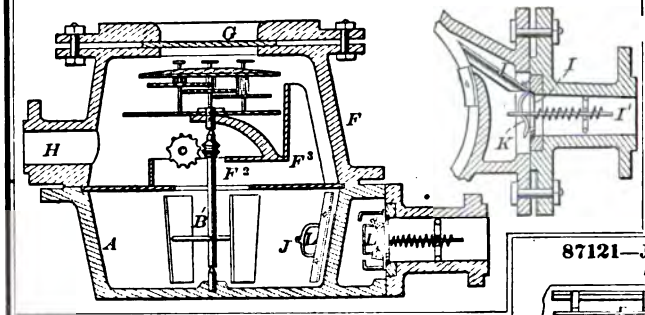

87125—W. Tibbals—*Cartridge Case.*

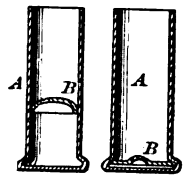

87121—J. Stephenson—*Street Car.*

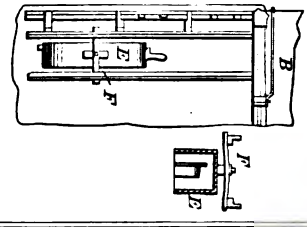

87120—J. Stephenson—*Street Car.*

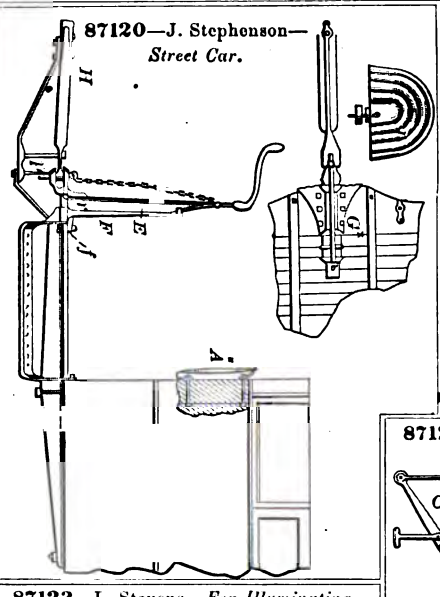

87119—S. Snyder—*Tanners' Leach.*

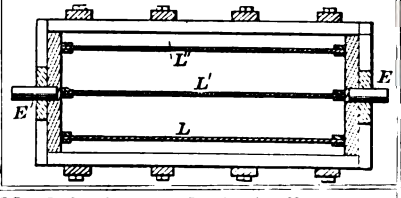

87122—J. Stephenson—*Brake for Horse Railroad Cars.*

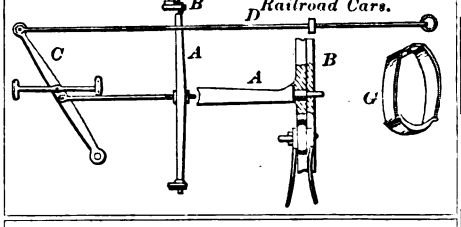

87123—L. Stevens—*For Illuminating Gas.*

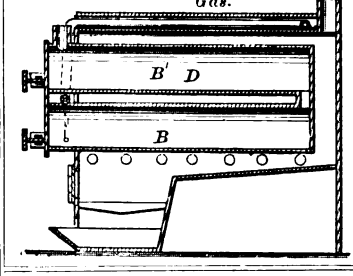

87126—T. Walter—*Safety Guard for Railway Cars.*

Fig. 1

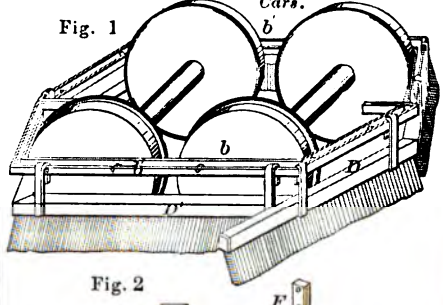

Fig. 2

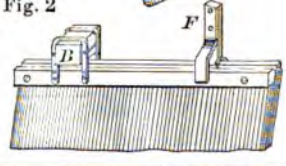

87124—A. B. Thompson—*Railway Frog.*

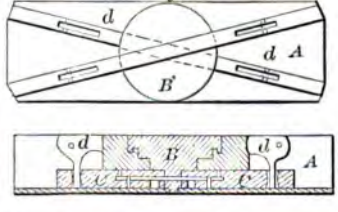

87127—W. H. Whitehead—*Stove.*

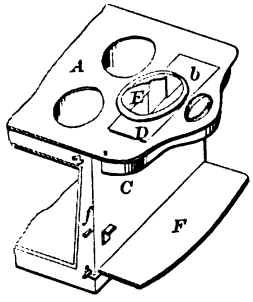

87128—H. Whitney—*Lamp Shade.*

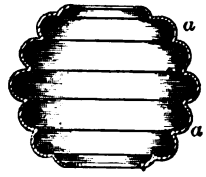

87129—G. W. Wilford—*Boot and Shoe Straightener.*

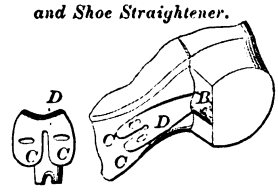

87133—B. F. Bee—*Wrench.*

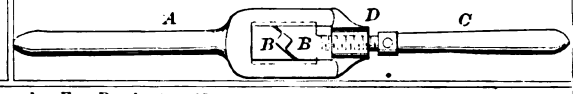

87130—D'Hurcourt & Armand—*For Producing Heat and Light from Gases.*

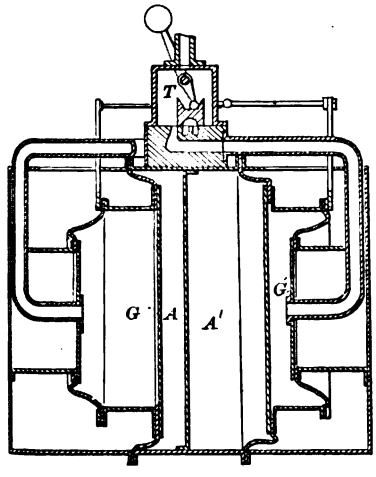

Fig. 7

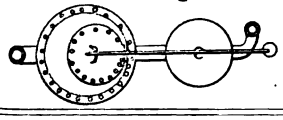

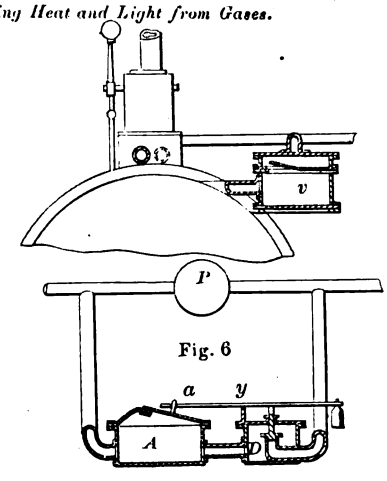

Fig. 6

87131—G. Atkins—*Lime Kiln.*

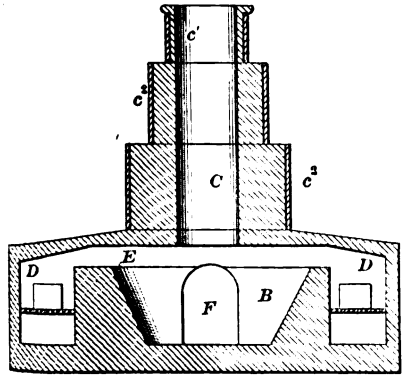

87134—T. Bisbing—*For Measuring Cloth, &c.*

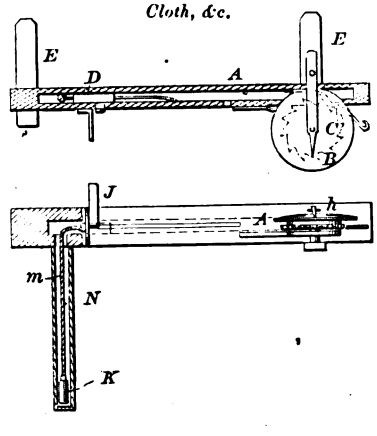

87165—C. O. Greene—*Stove.*

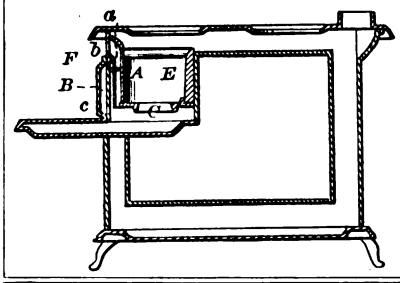

87166—Griggs & Barrows—*Water Meter.*

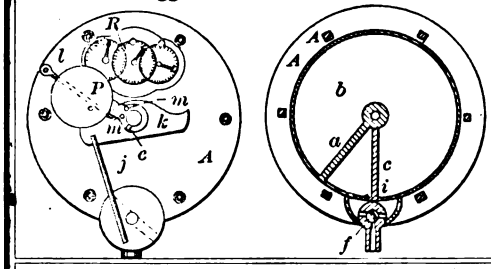

87167—Haberbush, Bentz & Vogel—*For Cutting Leather Straps, &c.*

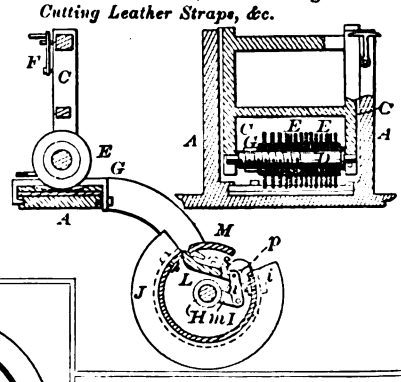

87171—O. A. Howe—*Sectional Pier.*

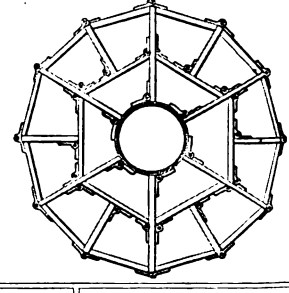

87172—W. T. Huntington—*Well Curbing.*

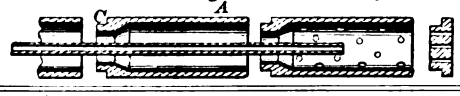

87168—P. W. Hamel—*Excavating Machine.*

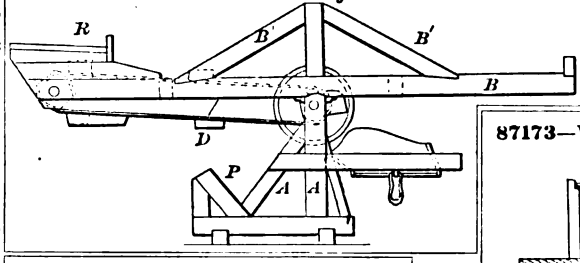

87170—C. Hodgetts—*Metal Pan.*

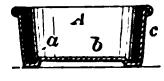

87173—W. B. Jarvis—*Animal Trap.*

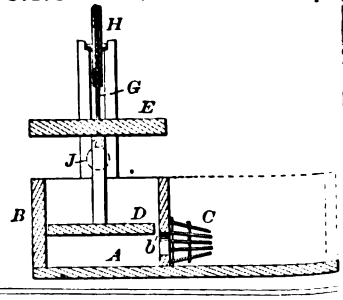

87174—C. Kellogg—*Bridge.*

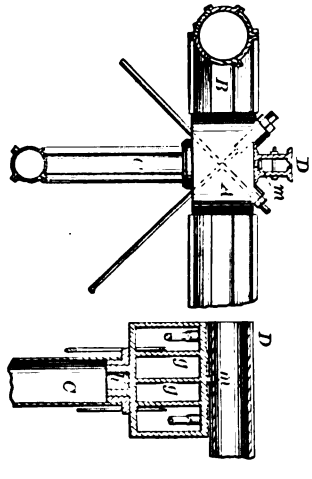

87175—J. F. Kinback—*Hearse.*

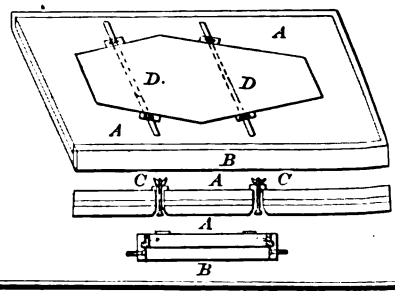

87139—F. Burghardt—*Manufacture of Paper Pulp.*

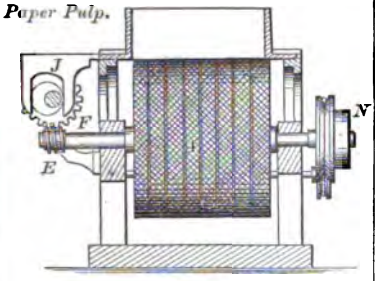

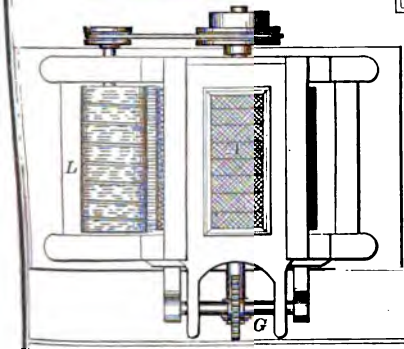

87143—D. H. Chamberlain—*Hoisting Apparatus.*

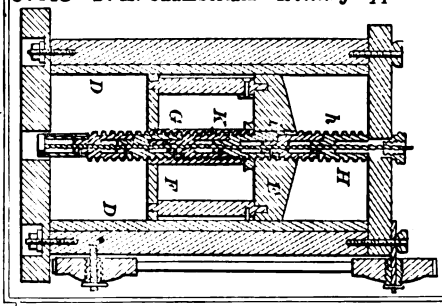

87147—De W. C. Cooley—*Churn.*

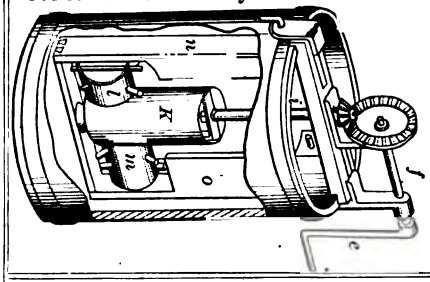

87144—J. F. Collins—*Rectifier and Condenser for Alcoholic and other Spirits.*

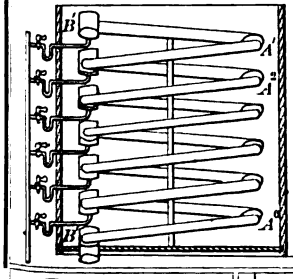

87151—W. Day—*Cultivator.*

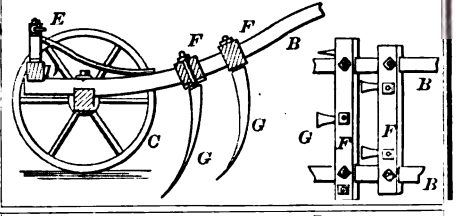

87145—E. Colvin—*Feather Renovator.*

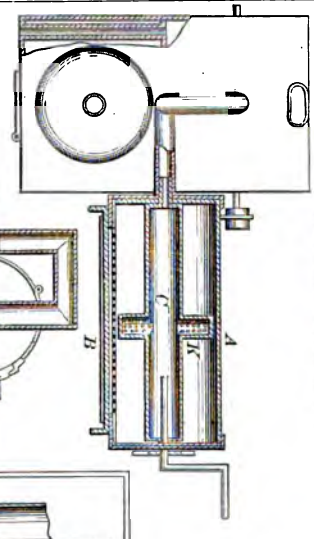

87146—J. Cook—*Screw Collar for Connecting Covers to Glass Vessels.*

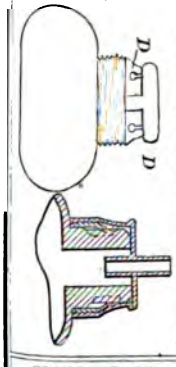

87148—S. Crowell—*Pump Piston.*

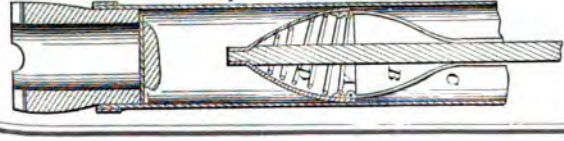

87186—W. C. McGill—*Ash Shovel and Sifter.*

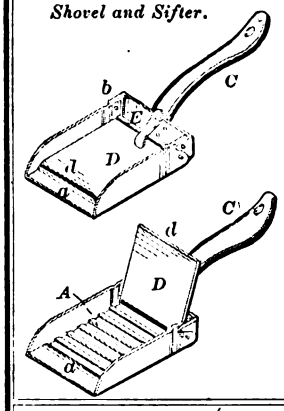

87190—W. Morgenstern—*Fire Arm.*

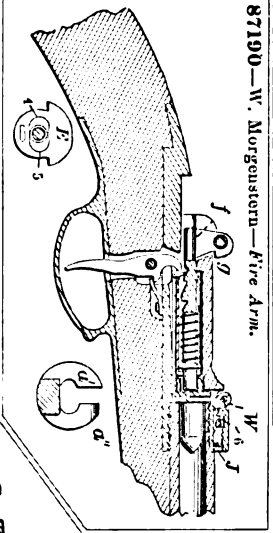

87191—W. Newcomb—*Saw Gummer.*

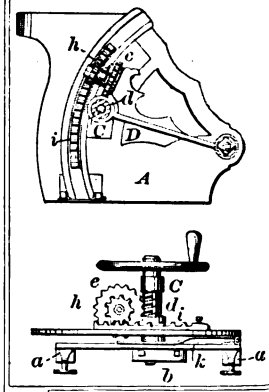

87189—Mood & Britton—*Lantern.*

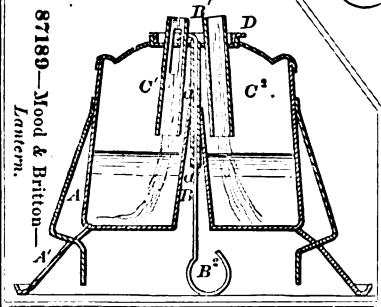

87188—F. X. Monnier—*Fishing Line.*

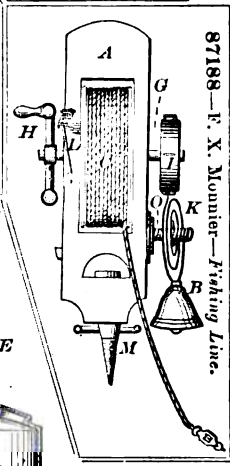

87195—G. B. Peers—*Vegetable Slicer.*

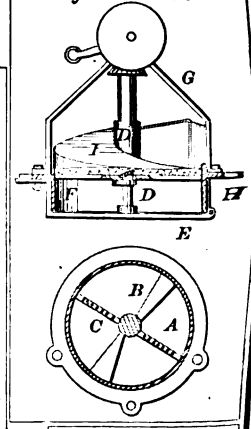

87193—C. C. Parsons—*For Purifying Acids.*

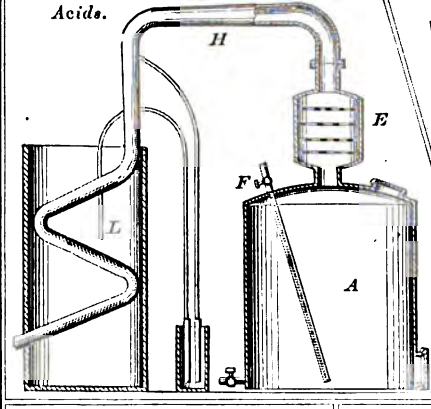

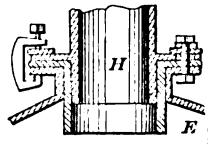

87198—E. S. Pierce—*For Cutting Screw Threads.*

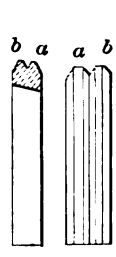

87194—I. T. Pease—*Fire Alarm.*

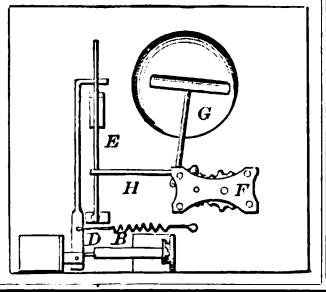

87192—H M. Paine—*Carburettor.*

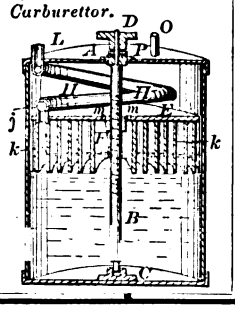

87196—A. F. Pfeifer—*Lock.*

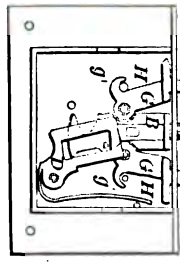

87150—B. F. Davis—*For Grinding Mowing Machine Knives.*

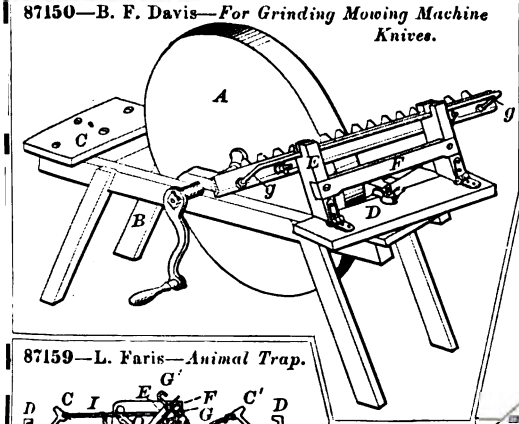

87154—W. B. Ellis—*Mosquito Canopy for Beds.*

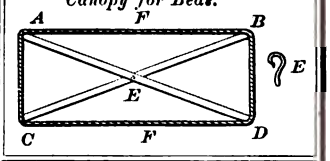

87162—S. Gable—*Rock Drilling Machine.*

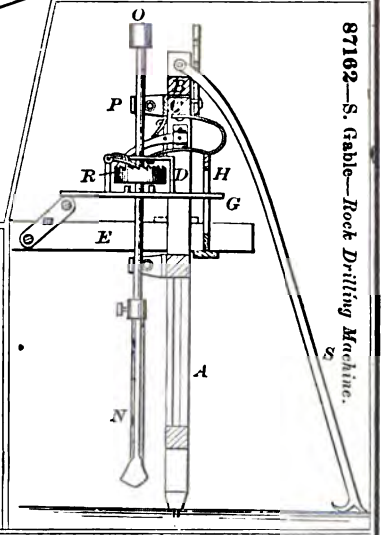

87159—L. Faris—*Animal Trap.*

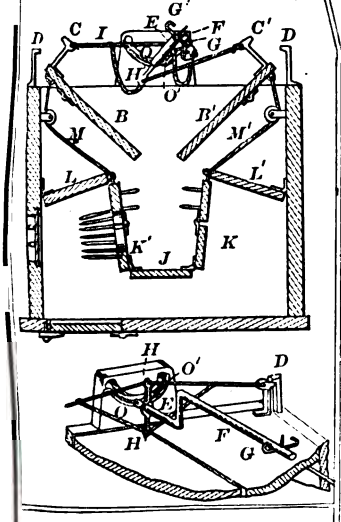

87163—P. Geier—*Bung.*

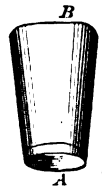

87160—S. B. Fisler—*Corset.*

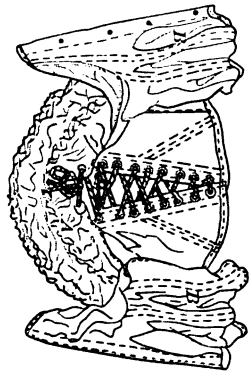

87158—R. F. Fairlie—*Car Coupling.*

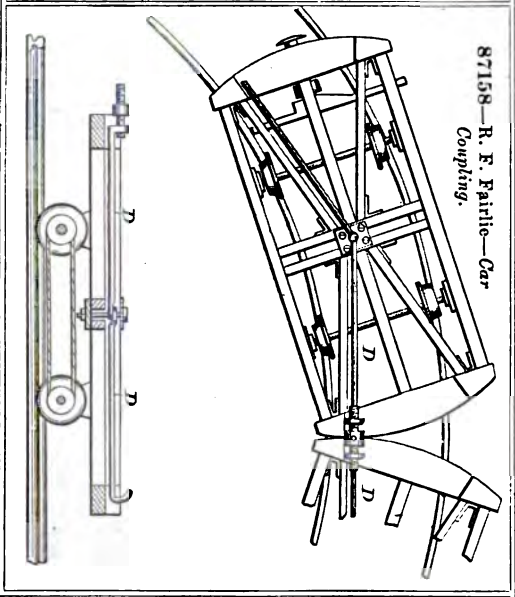

87164—J. J. Glitenan—*Hat.*

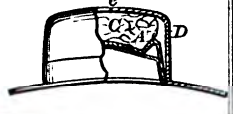

87161—J. O. Foster—*Paper File.*

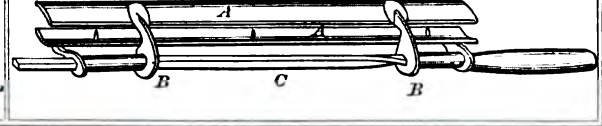

87206—E. B. Scattergood—*Gate.*

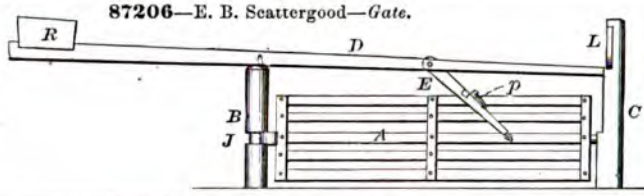

87210—W. M. Sloane—*For Generating Gas.*

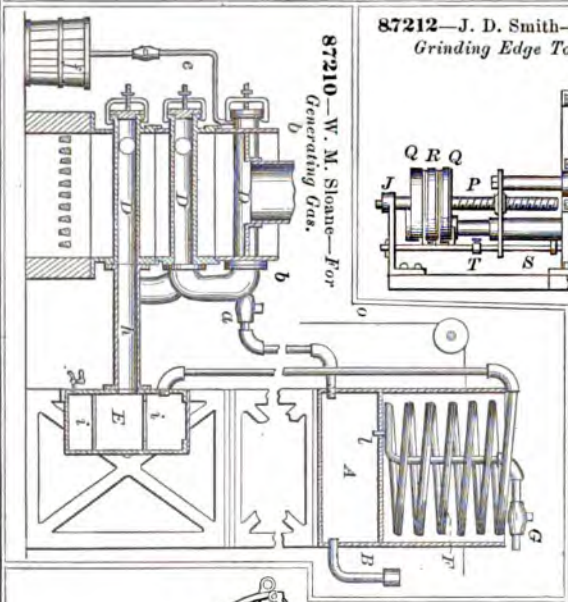

87212—J. D. Smith—*For Grinding Edge Tools.*

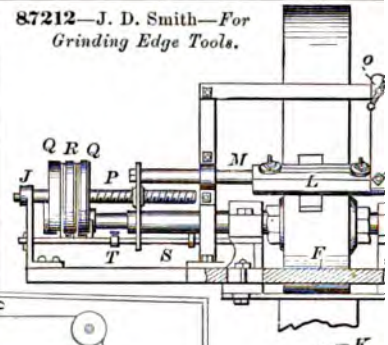

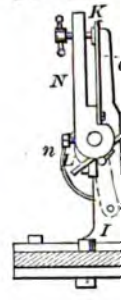

87211—E. H. Smith—*Harvester Rake.*

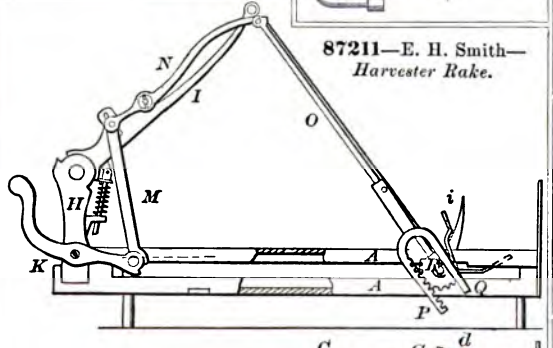

87209—W. F. *Curtain Weig*

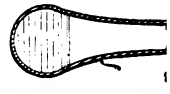

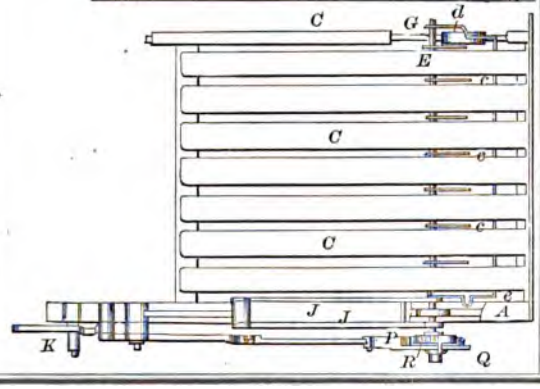

87207—C. . *Oil Stil*

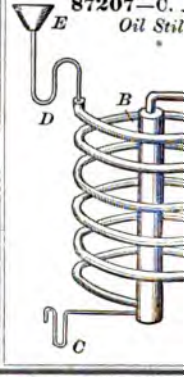

87176—F. Klinkerman—*Toll Collector for Grist Mills.*

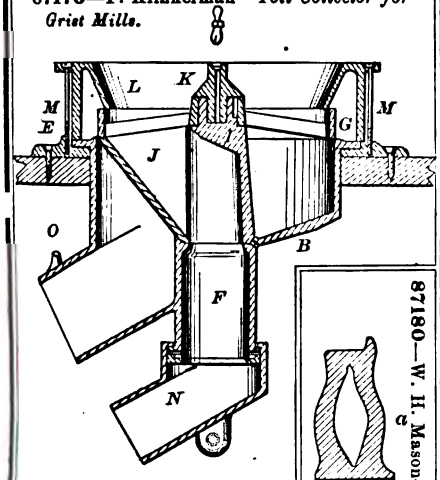

87179—J. L. Labiaux—*Coffee Pot.*

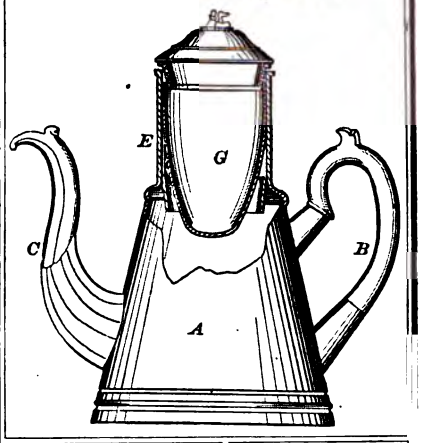

87180—W. H. Mason—*Railway Car Wheel.*

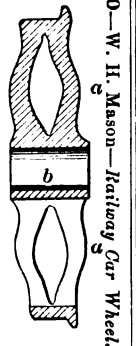

87178—O. Krakoviez—*Ventilator.*

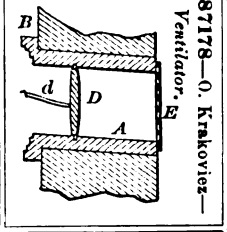

87187—J. M Merrick, Jr.—*Insulator for Telegraph Conductors.*

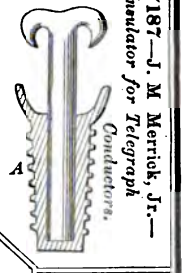

87183—G. B. Massey—*Liquid Meter.*

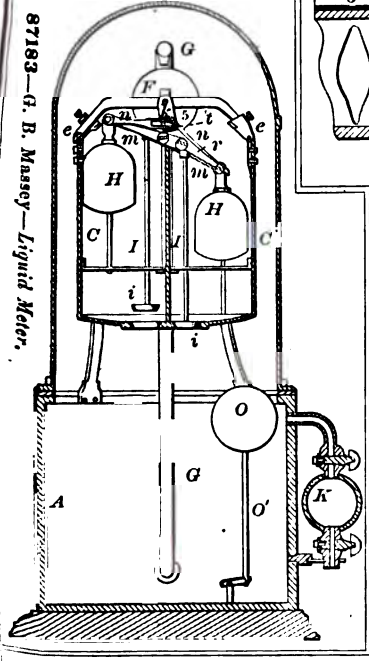

87182—E. J. Manville—*Fluting Machine.*

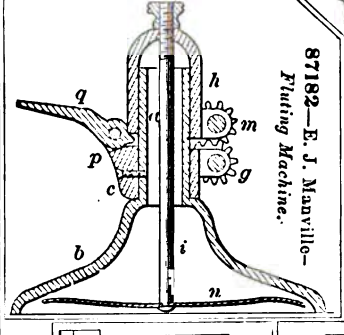

87181—G. B. Massey—*Low Water Detector.*

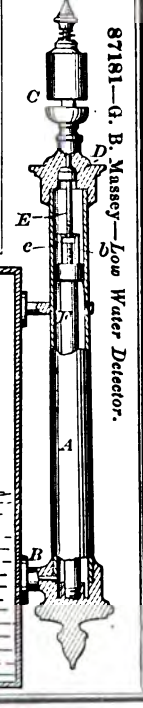

87184—F. B. Mattson—*Spring Bed Bottom.*

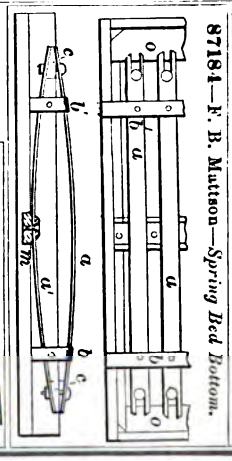

87185—W. D. McFadden—*Churn.*

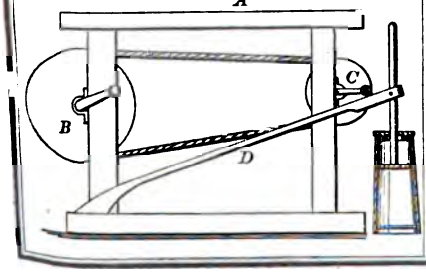

87223—G. Thompson—*Rod Coupling.*

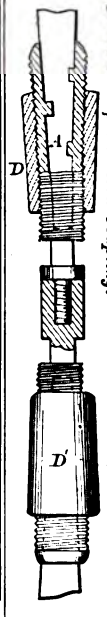

87224—R. Tippett—*Plate Bending Machine.*

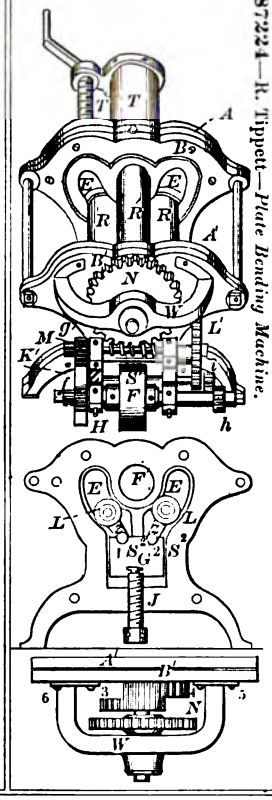

87225—Topliff & Ely—*Velocipede.*

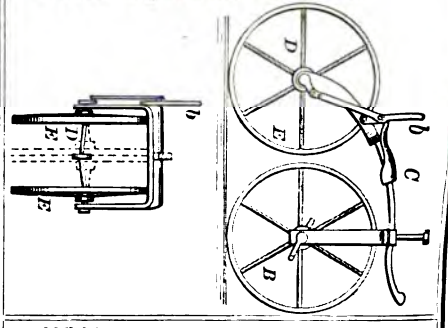

87228—W. S. Webb—*Advertising Device.*

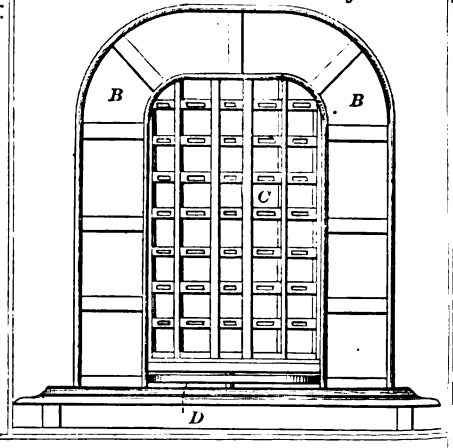

87226—Voorhees & Custis—*For Preserving Wood.*

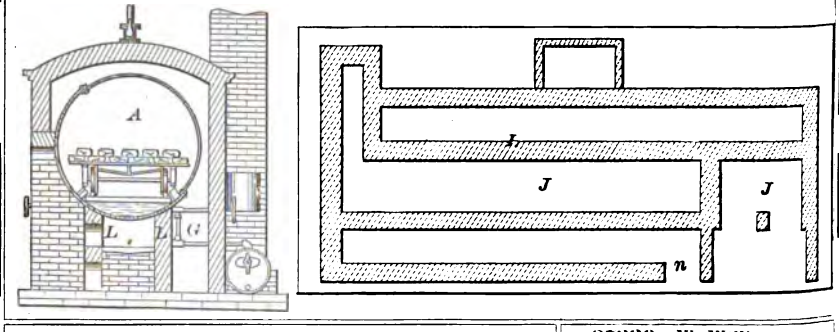

87230—A. Wisner—*Lining-Plates for Stoves.*

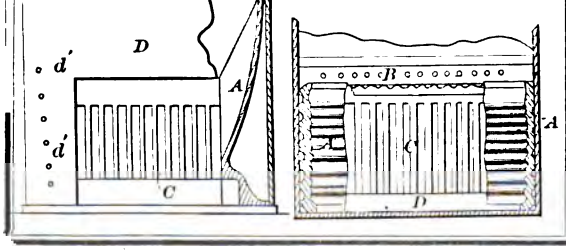

87229—W. Williams—*Carriage Tire.*

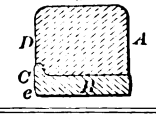

87234—J. B. Bailey—*Curtain Fixture.*

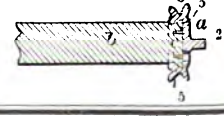

87231—W. Yates—*For Treating Iron and Steel.*

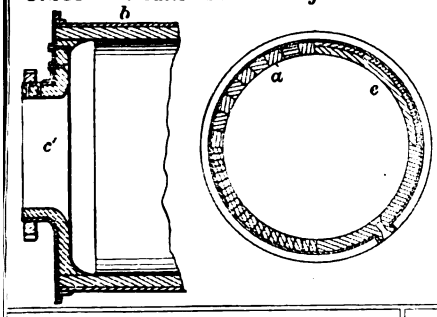

87232—J. J. Andrew—*Straw Cutter.*

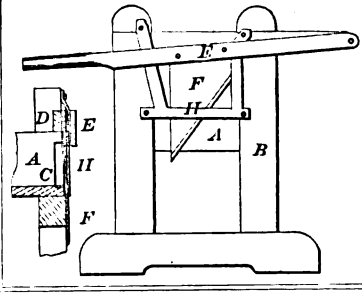

87233—J K. Babcock—*Sawing Machine.*

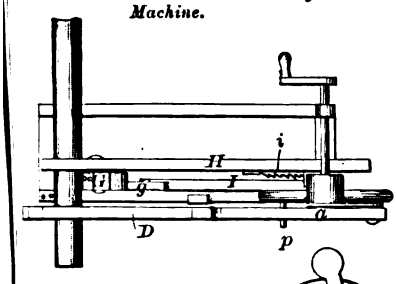

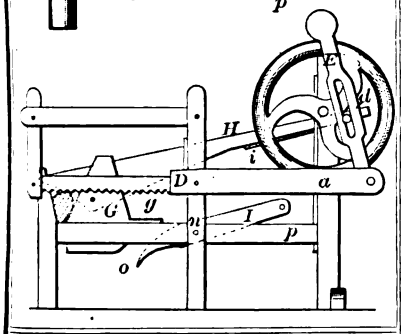

87235—T. H. Baker—*Leaching Vat.*

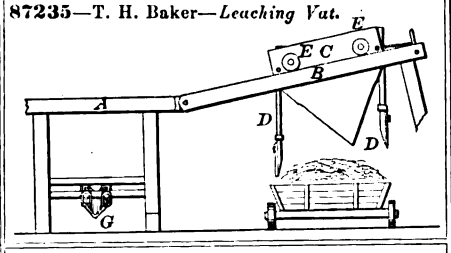

87237—W. T. Beckman—*Corn Planter.*

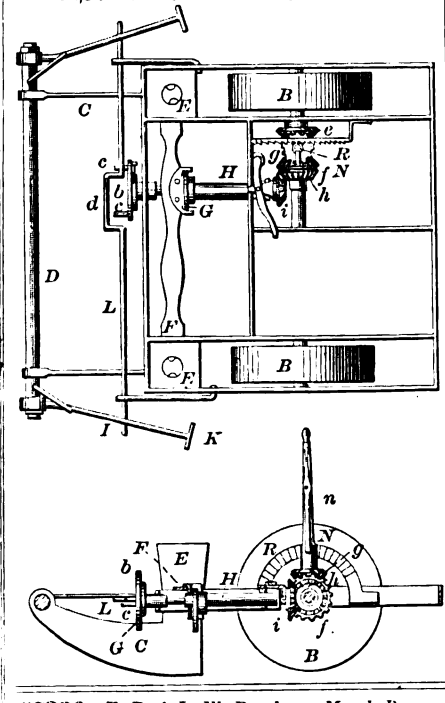

87239—S. Blair—*Grain Screen.*

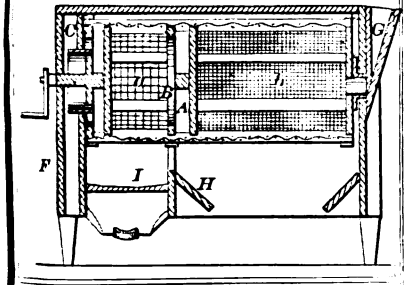

87238—J. H. Bellamy—*Toy Bird.*

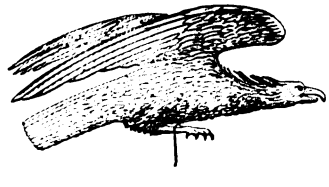

87236—E. B. & L. W. Beecher—*Match Box.*

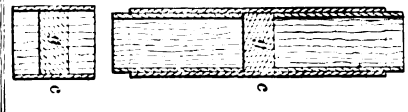

87241—R. Burdett—*Reed Organ.*

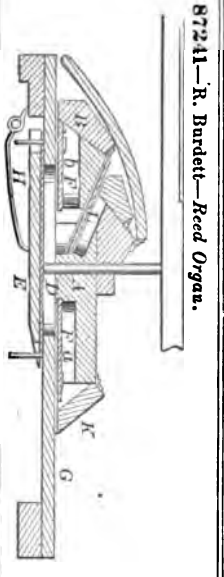

87242—E. A. Calahan—*Telegraph Punching Apparatus.*

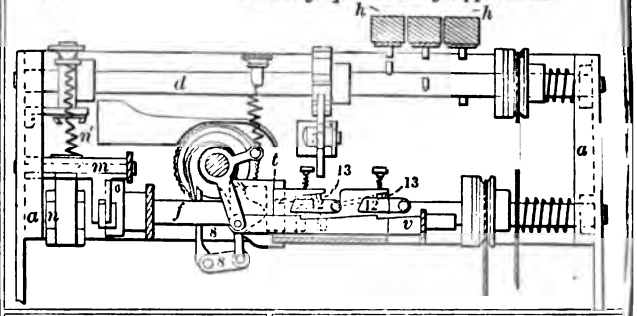

87247—W. Curran—*Depurator.*

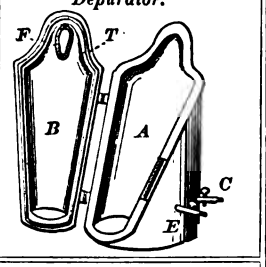

87240—C. B. Bristol—*Martingale Ring.*

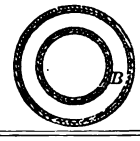

87243—J. L. Cathcart—*Blind Hinge.*

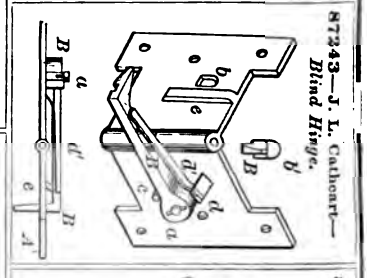

87244—W. Chapman—*Harvester.*

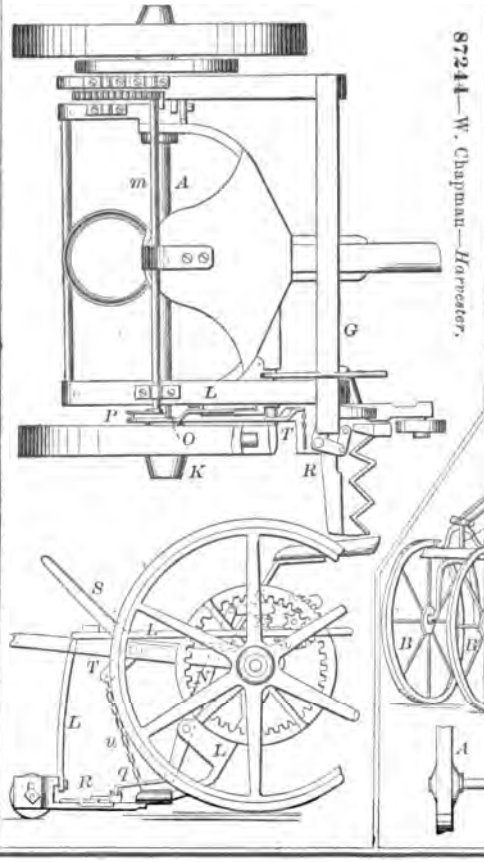

87246—S. F. Cross—*Halter.*

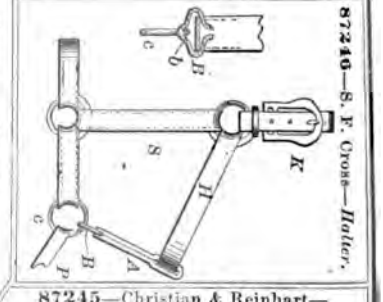

87245—Christian & Reinhart—*Velocipede.*

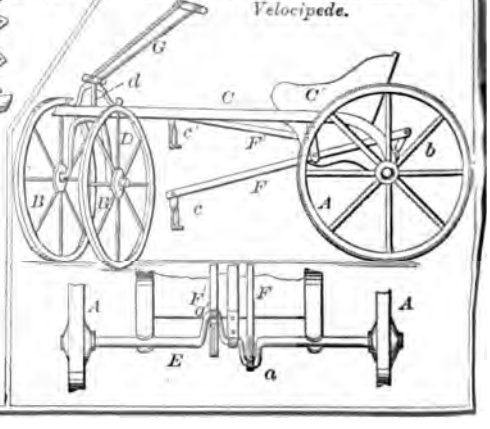

87248—G. S. & H. Curtis—*Amalgamator for Gold and Silver.*

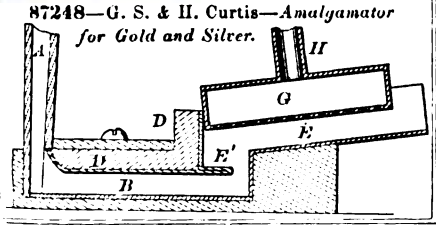

87251—P. Frost—*Scythe Snath.*

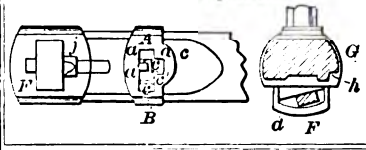

87252—A. Fuhrman—*Thill Coupling.*

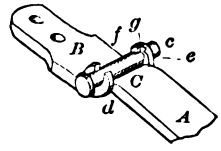

87250—J. Ford—*Filter.*

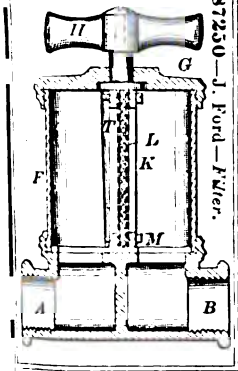

87249—R. Dean—*Fork and Hook.*

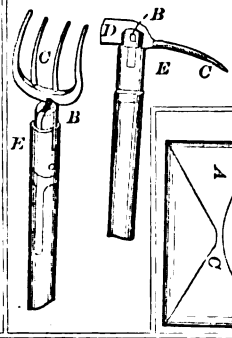

87253—J. C. Gaston—*Envelope.*

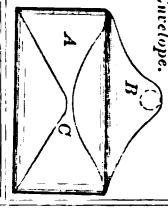

87257—C. B. Hogg—*Shield for Horse Collars.*

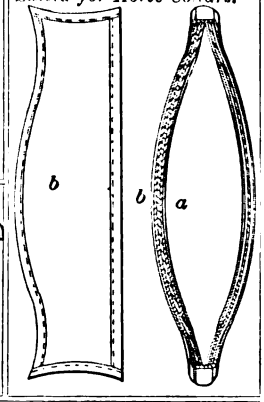

87254—Gill & Hummel—*For Threshing and Cleaning Grain.*

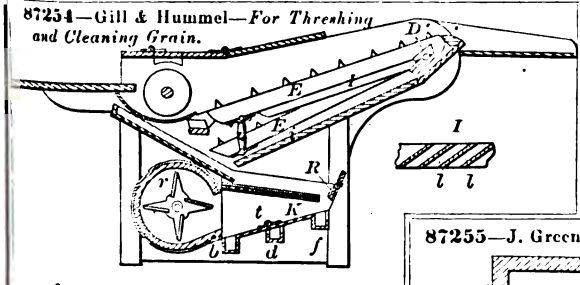

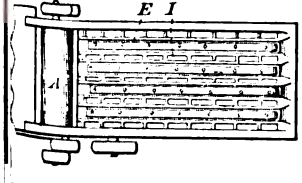

87255—J. Green—*Glass Furnace, Kiln, &c.*

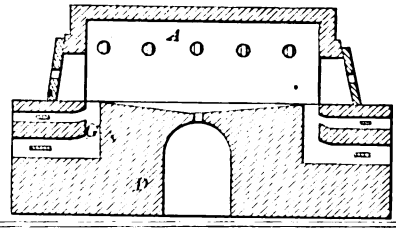

87256—G. R. Harding—*Burglar Alarm.*

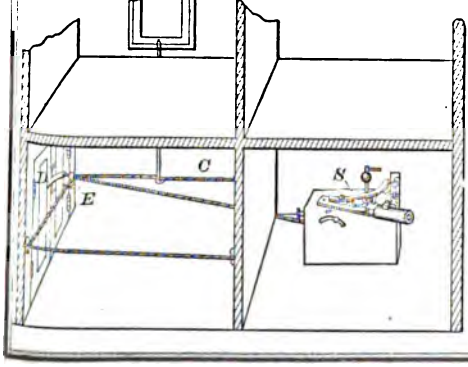

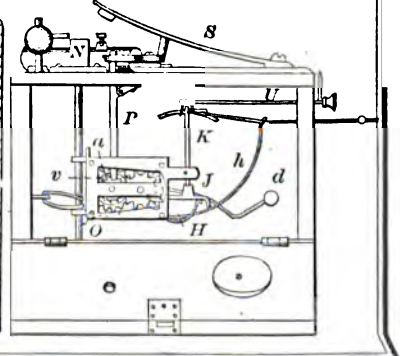

87260—W. M. Hughes—*Tire Upsetter.*

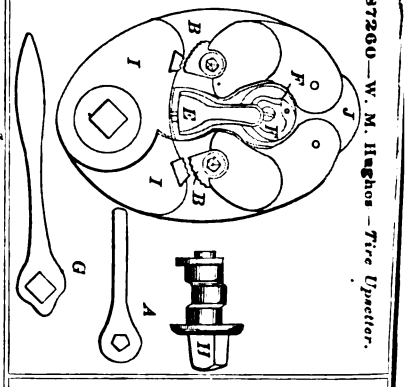

87258—A. Holbrook, Jr.—*For Sewing Books.*

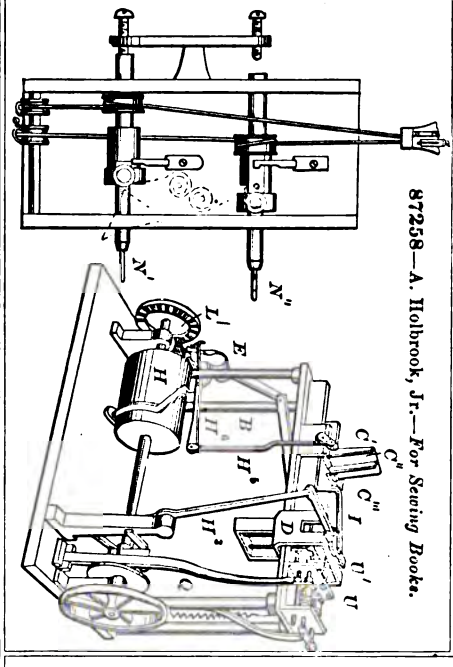

87265—W. M. King—*Milk Cooler.*

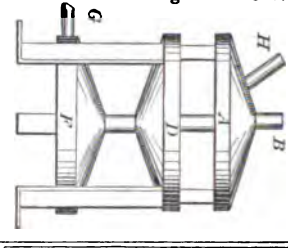

87259—Howe & Hartford—*Velocipede.*

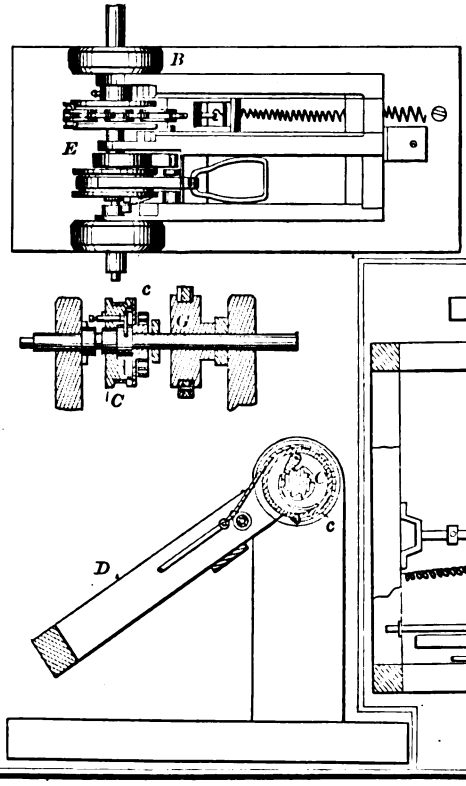

87262—L. A. Jefferson—*Button.*

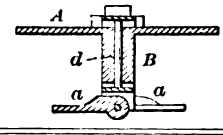

87261—C. S. Hutchinson—*For Making Trigs.*

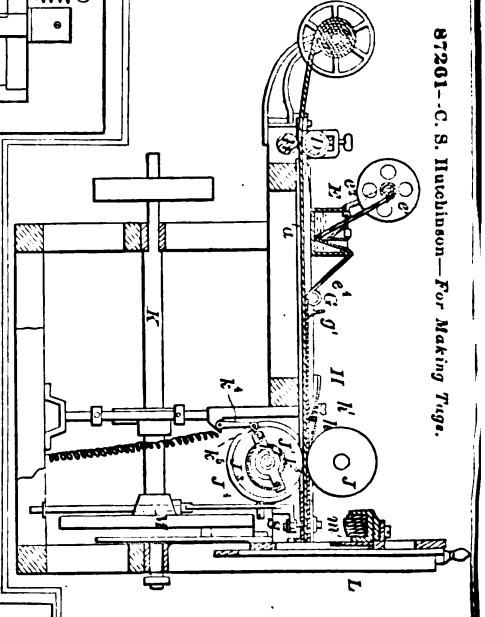

87248—G. S. & H. Curtis—*Amalgamator for Gold and Silver.*

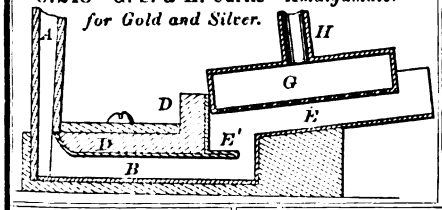

87251—P. Frost—*Scythe Snath.*

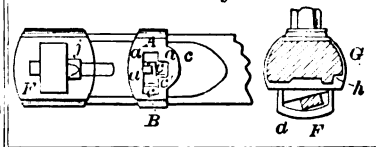

87252—A. Fuhrman—*Thill Coupling.*

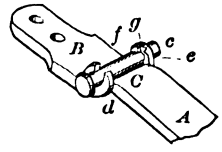

87250—J. Ford—*Filter.*

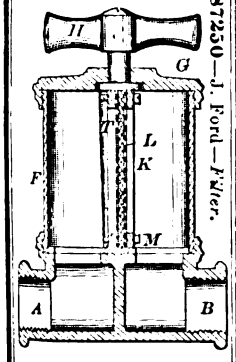

87249—R. Dean—*Fork and Hook.*

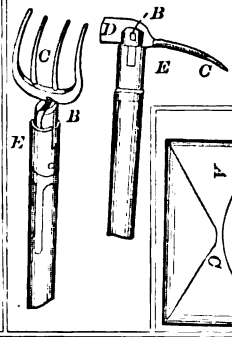

87253—J. C. Gaston—*Envelope.*

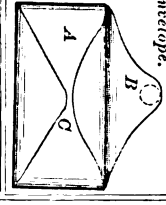

87257—C. B. Hogg—*Shield for Horse Collars.*

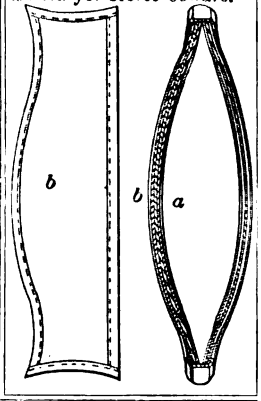

87254—Gill & Hummel—*For Threshing and Cleaning Grain.*

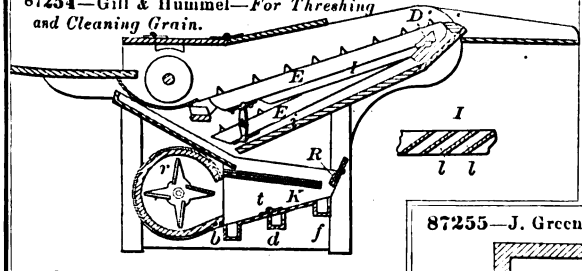

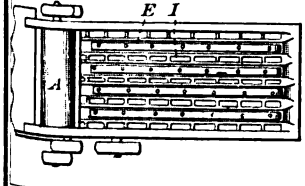

87255—J. Green—*Glass Furnace, Kiln, &c.*

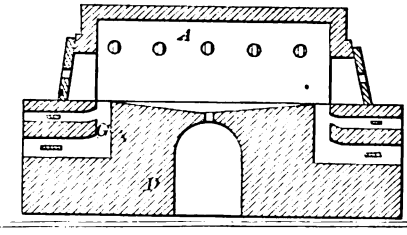

87256—G. R. Harding—*Burglar Alarm.*

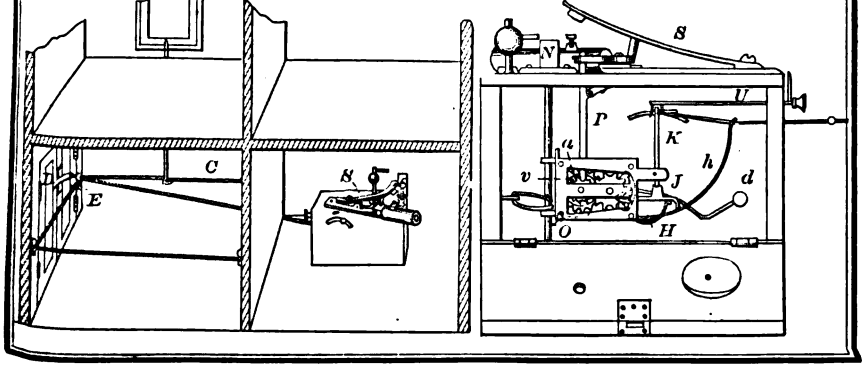

87260—W. M. Hughes—*Tire Upsetter.*

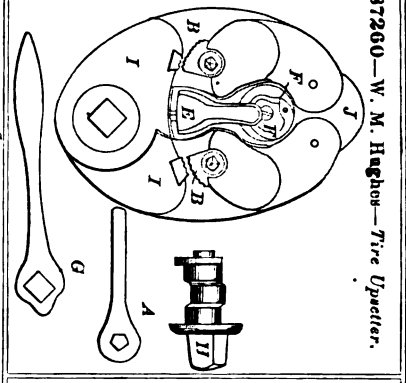

87258—A. Holbrook, Jr.—*For Sewing Books.*

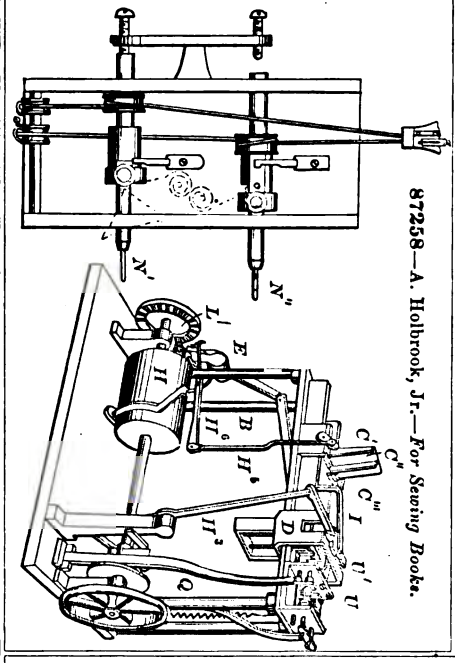

87265—W. M. King—*Milk Cooler.*

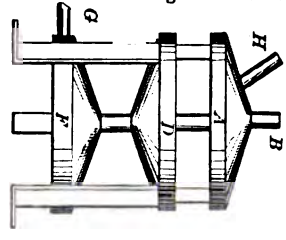

87259—Howe & Hartford—*Velocipede.*

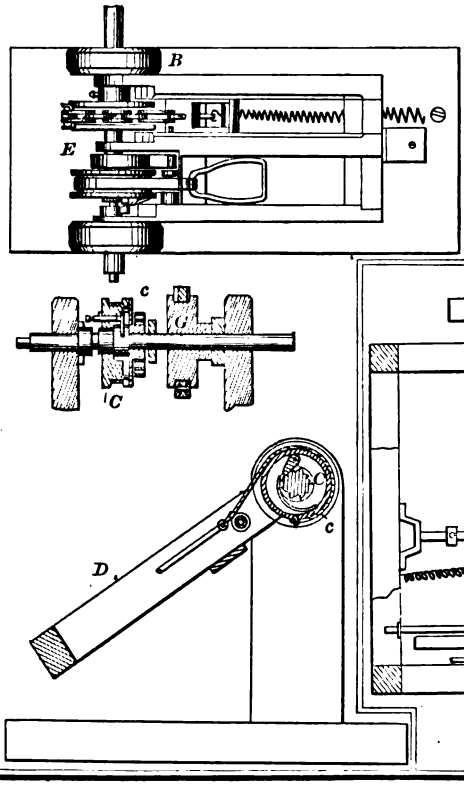

87262—L. A. Jefferson—*Button.*

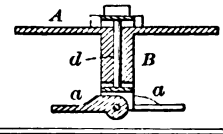

87261—C. S. Hutchinson—*For Making Tugs.*

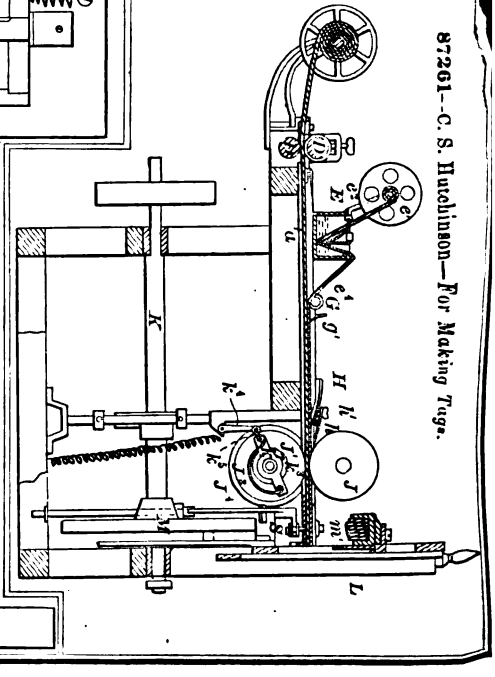

87287—S. Perry—*Velocipede.*

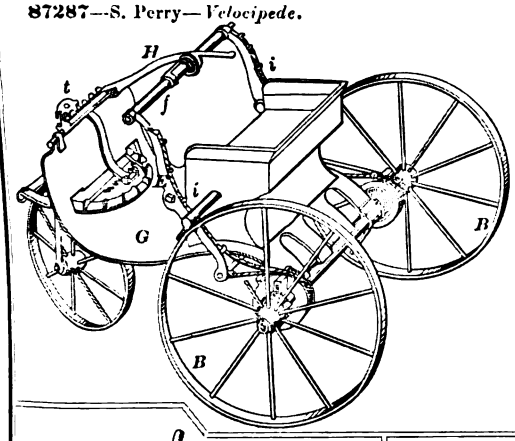

87288—H. Ramey—*Evaporator.*

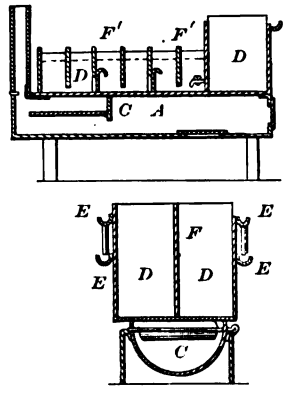

87290—J. Reinhart—*Velocipede.*

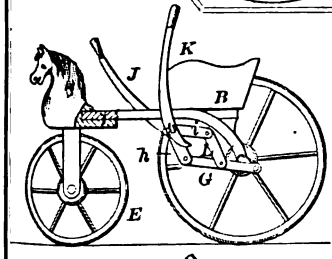

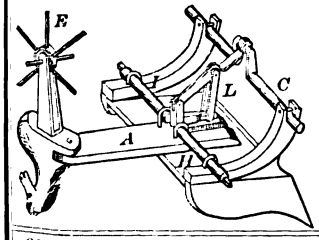

87289—G. W. Rathbun—*For Filing Saws.*

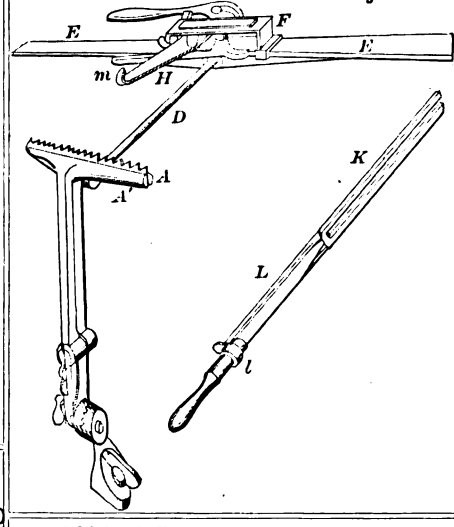

87291—J. Richardson—*Dry Dock.*

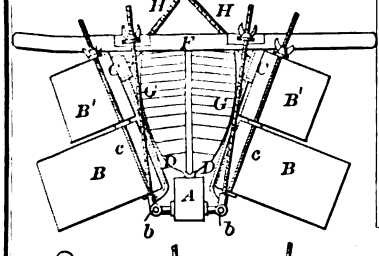

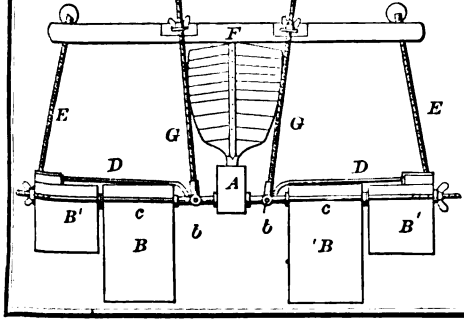

87293—J. E. Ridgway—*Crossing Plate for Street Railways.*

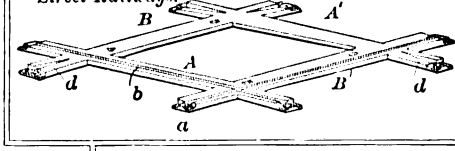

87292—J. Riddlesberger—*Lifting Jack.*

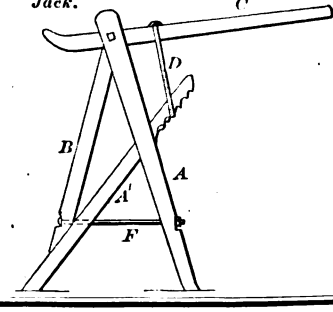

87294—G. A. Riedel—

87296—R. B. Robbins—*Cultivator.*

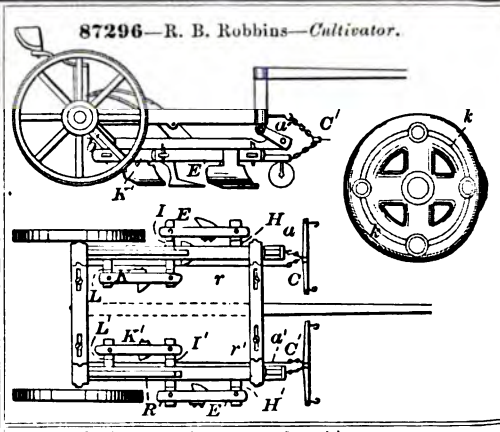

87297—B. S. Roberts—*Cartridge.*

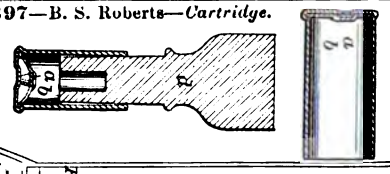

87298—C. Schmitz—*For Tanning, Fulling and Cleansing.*

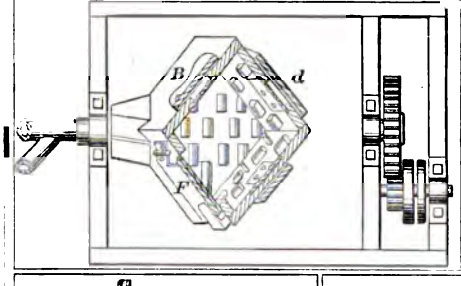

87300—G. Seelig—*Wash Stand.*

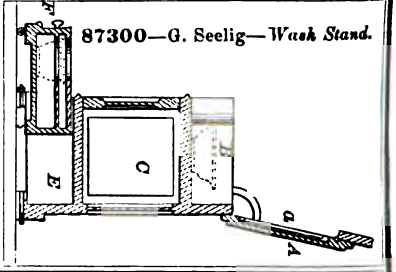

87299—J. E. Schwippel—*For Making Gas.*

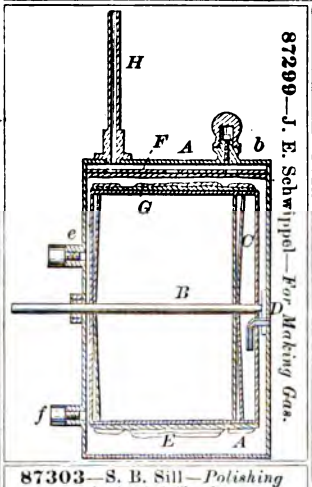

87303—S. B. Sill—*Polishing Artificial Teeth.*

87301—J. Shuckleton—*Steam Heater.*

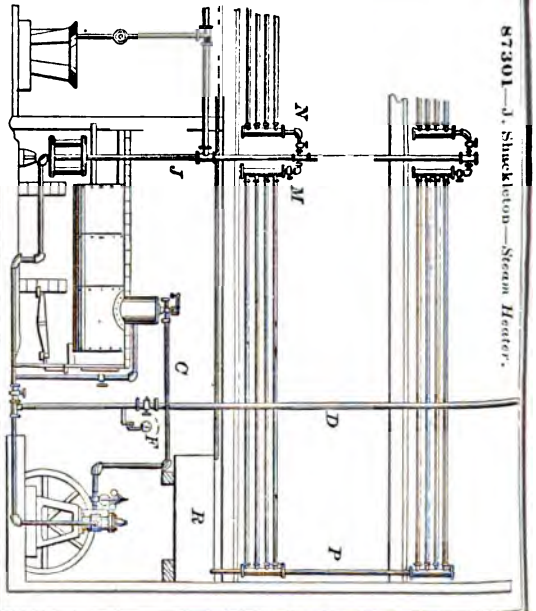

87302—Shear & Packard—*Stove.*

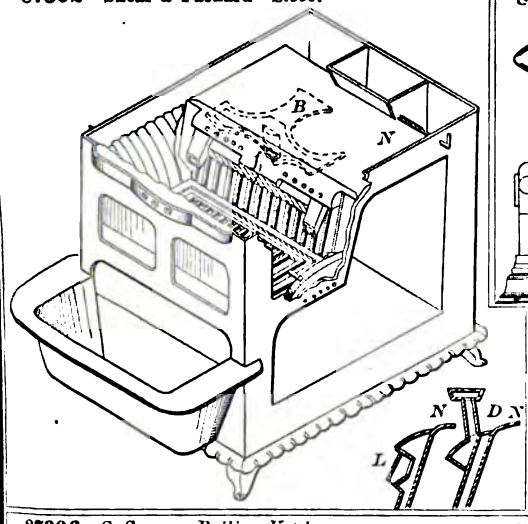

87304—W. M. Smith—*Copying Press.*

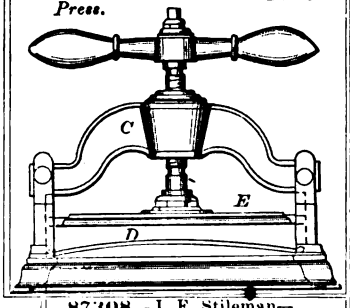

87308—J. F. Stileman—*Chair for Railway Rails.*

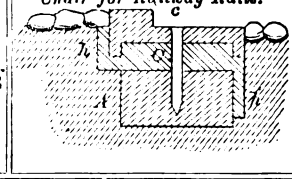

87306—S. Spoor—*Boiling Kettle.*

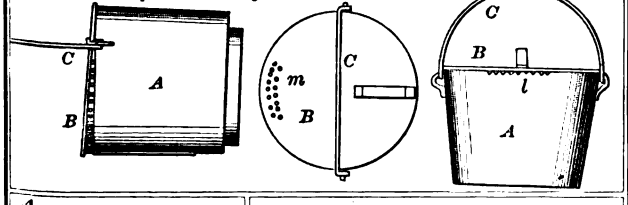

87305—S. H. Smith—*Draught Equalizer.*

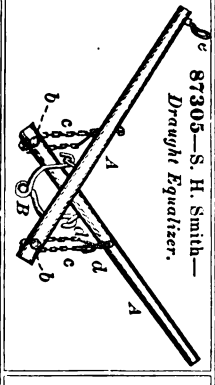

87307—L. Sterne—*Pneumatic Spring.*

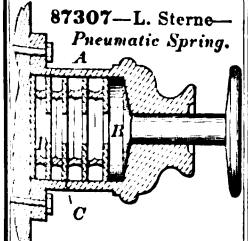

87312—S. Way—*Clothes Dryer.*

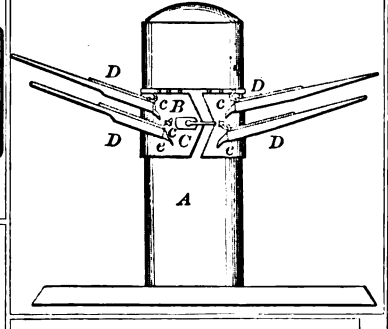

87309—F. M. & J. W. Thompson—*Bit Stock.*

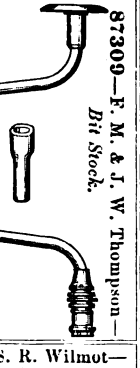

87311—E. J. Watson—*Thill Coupling.*

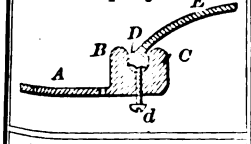

87310—L. C. Tower—*Waterproof Boot and Shoe.*

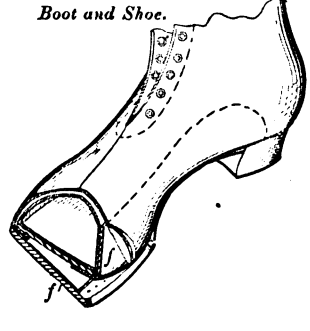

87313—W. B. Wickes—*Plant Protector.*

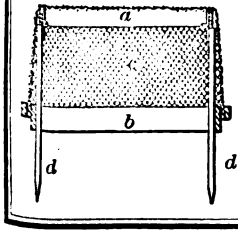

87314—S. R. Wilmot—*Cigar Case.*

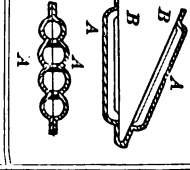

87315—H. Wood—*Horse Rake.*

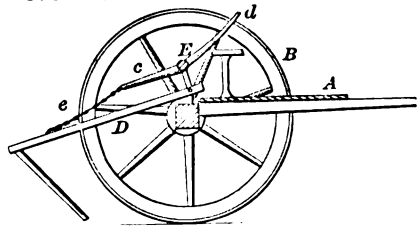

87316—A. Young—*Gun Lock.*

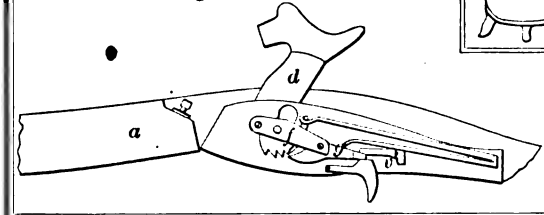

87317—N. P. Akin—*For Drying and Finishing Tubular Knitted Fabrics.*

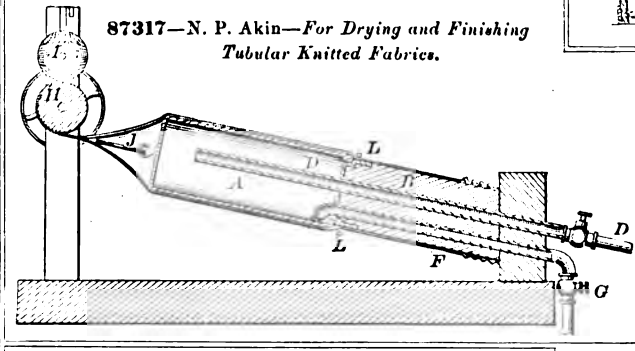

87318—C. Ballinger—*Pitcher.*

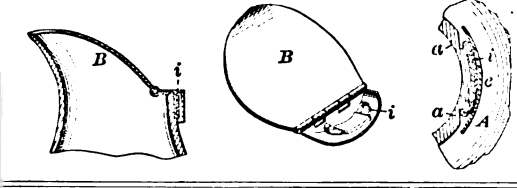

87319—W. P. Barker—*For Use of Anæsthetic Agent.*

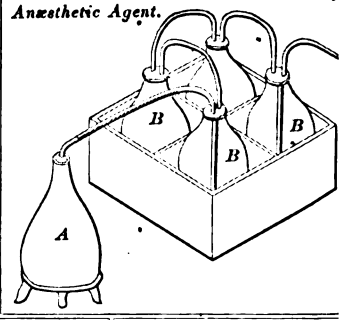

87322—A. G. Batchelder—*Apple Parer.*

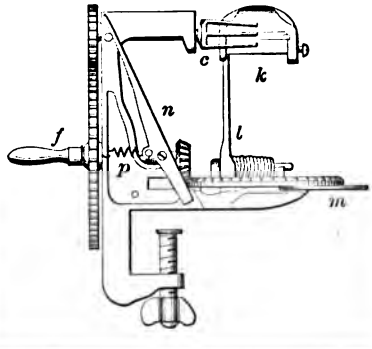

87328—A. H. Daniels—*Bale Band Shears.*

87323—G. S. Batchelle

Butter Tub.

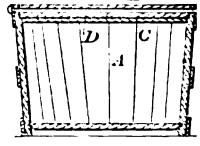

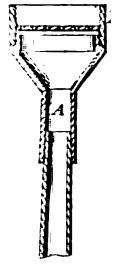

87324—Baudouin & Fte

For Destroying Insec

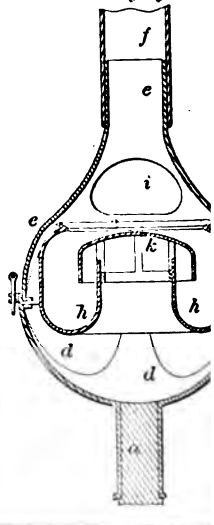

87326—B. Bisbee—*Brick Machine.*

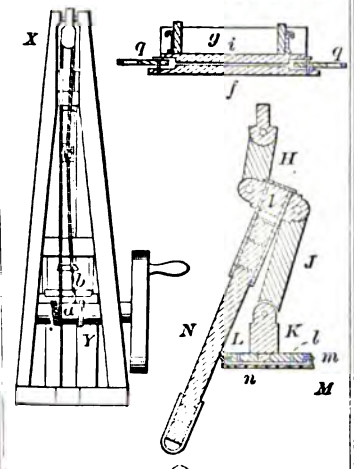

87327—S. W. Bullock—*Roasting Ores.*

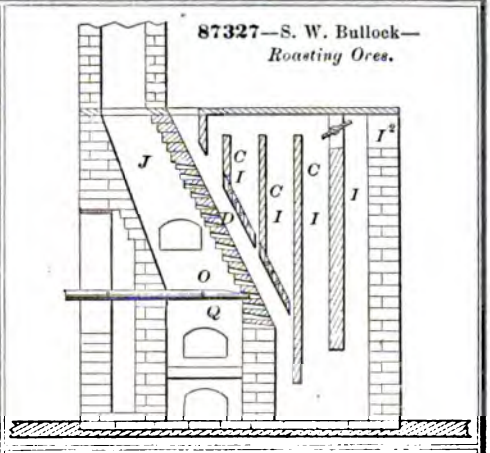

87329—M. L. Deering—*Sliding Door Sheaves.*

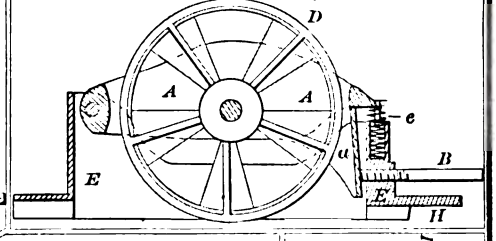

87331—G. W. Eldridge—*Sewing Machine.*

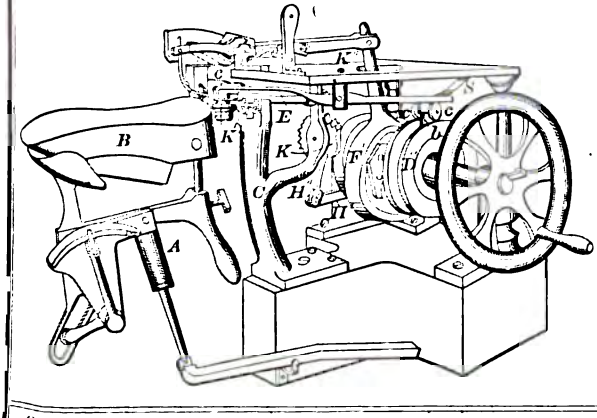

87332—J. W. Evans—*For Packing Coiled Springs.*

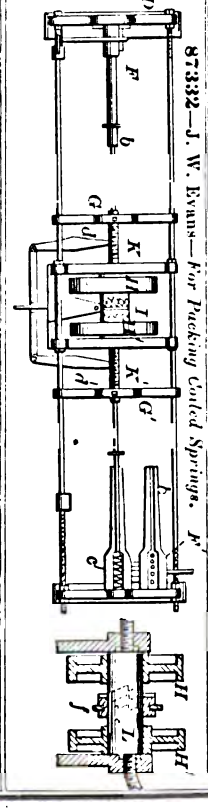

87330—E. Eaton—*For Whipping Cloth.*

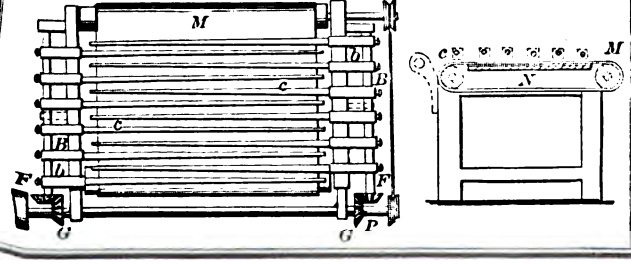

87315—H. Wood—*Horse Rake.*

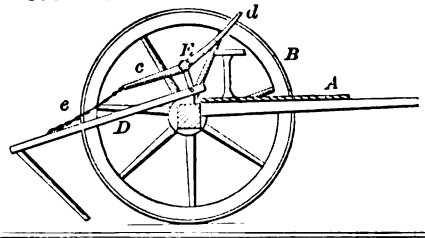

87316—A. Young—*Gun Lock.*

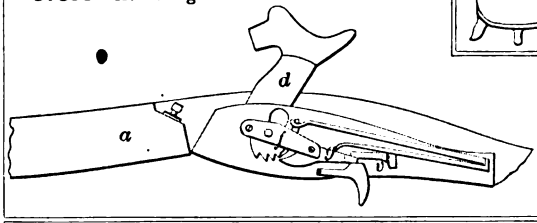

87317—N. P. Akin—*For Drying and Finishing Tubular Knitted Fabrics.*

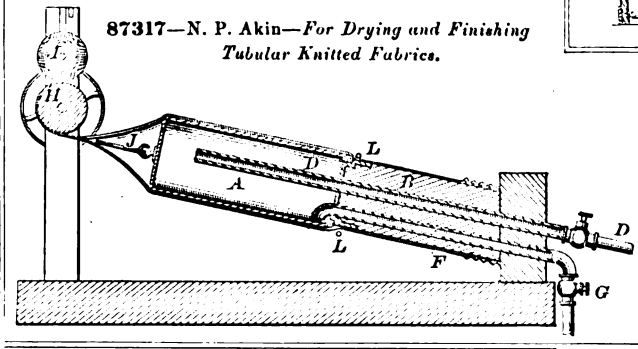

87318—C. Ballinger—*Pitcher.*

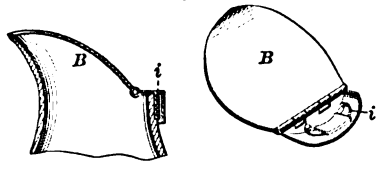

87319—W. P. Barker—*For Use of Anæsthetic Agent.*

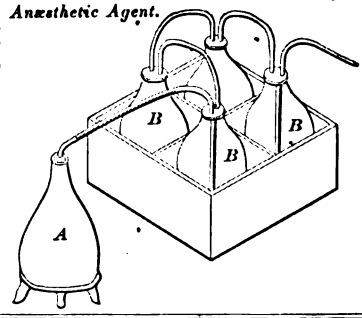

87323—G. S. Batcheller—*Butter Tub.*

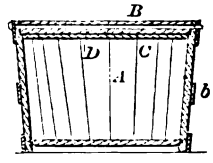

87321—J. Barrows—*Sprinkler.*

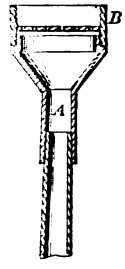

87324—Baudouin & Fteley—*For Destroying Insects.*

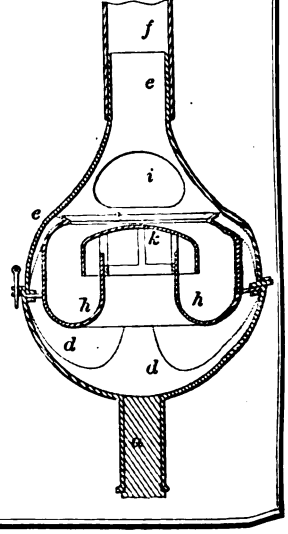

87322—A. G. Batchelder—*Apple Parer.*

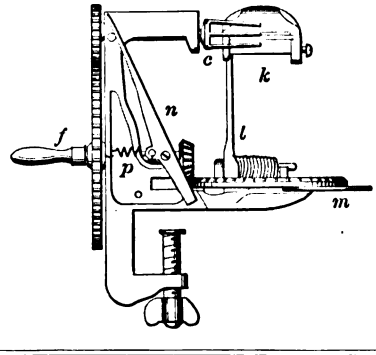

87328—A. H. Daniels—*Bale Band Shears.*

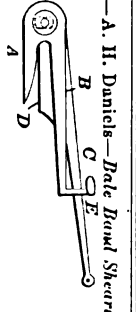

87345—Lauer & Eisenhart—*Horse Rake.*

87344—F. W. Judd—*Toy Bow.*

87342—B. H. Jenks—*Carding Engine.*

87347—C. Lobdell—*Horse Hoe*

87349—T. McGrath—*Hoisting Grapple.*

87353—G. R. Metten—*Mechanical Movement.*

87351—McLaughlin & Dean—*Railway Switch.*

87352—J. V. Meigs—*Cartridge.*

87348—A. L. McCrea—*Refrigerating Car.*

87333—B. C. Finfrock—*Boot Crimp.*

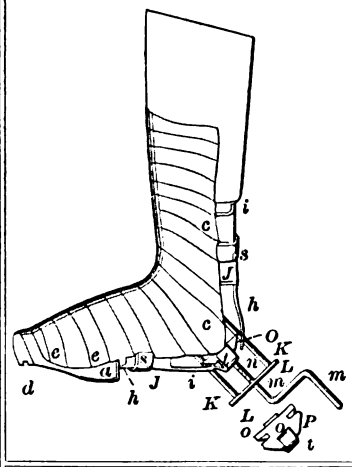

87338—J. A. & H. A. House—*Sewing Machine.*

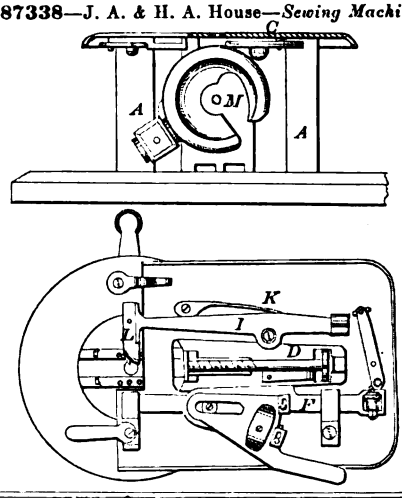

87336—E. L. Fraker—*Fence.*

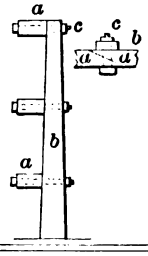

87335—C. H. Foster—*Street Car Seat.*

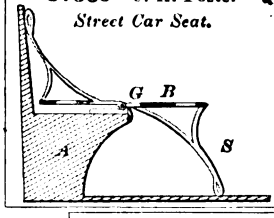

87339—T. J. House—*Printers' Furniture.*

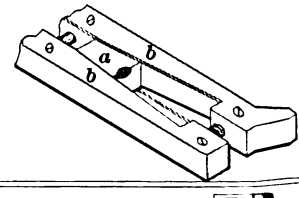

87337—R. B. Goodyear—*Loom.*

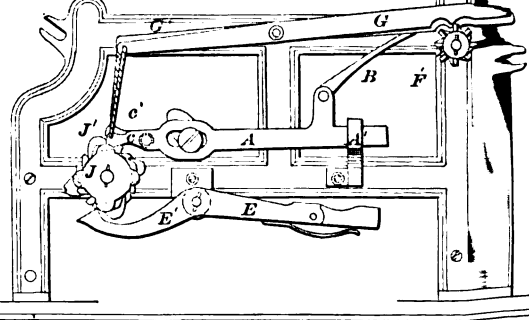

87341—B. H. Jenks—*Loom.*

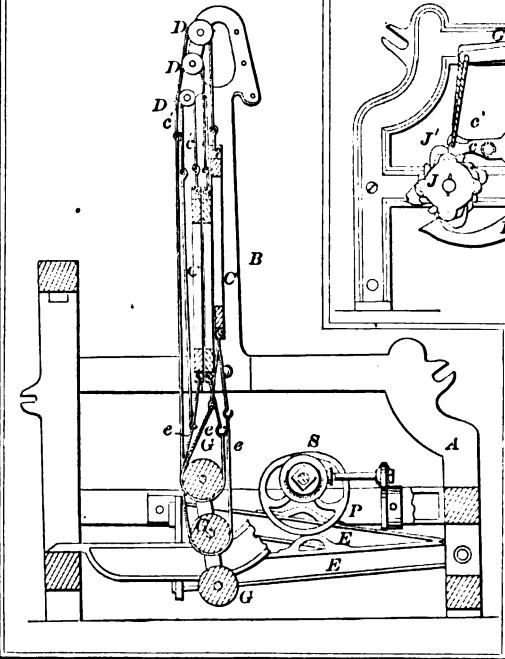

87334—M. Fitzgibbons—*Fur Box.*

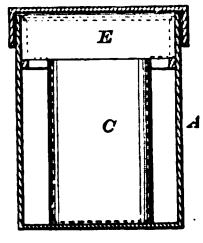

87360—S. T. Pearce—*Ore Separator.*

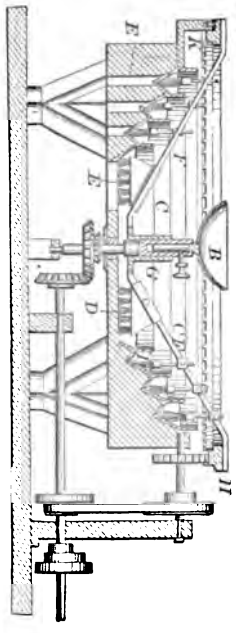

87361—S. T. Pearce—*For Separating Ores.*

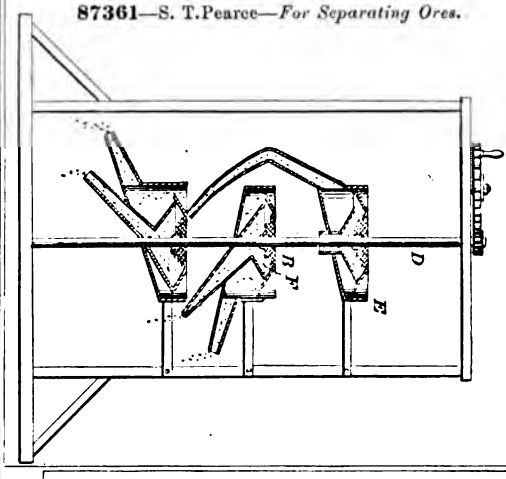

87362—L. G. Peel—*Plow Stock.*

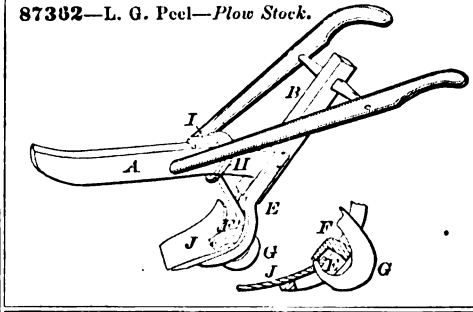

87363—J. Perry—*Horse Rake.*

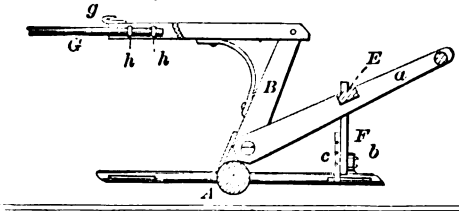

87366—T. R. Power—*Car Coupling.*

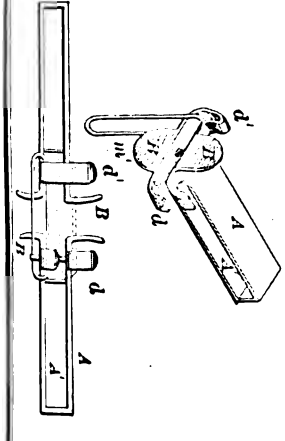

87367—D. C. Ripley—*Lamp.*

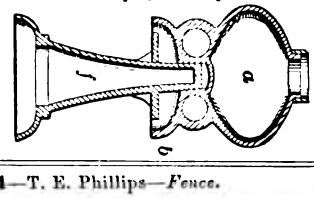

87368—A. M. Ross—*Hoe.*

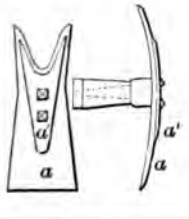

87364—T. E. Phillips—*Fence.*

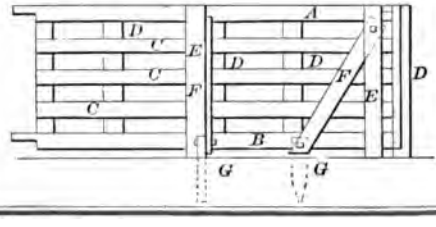

87354—J. Miller—*Brick Machine.*

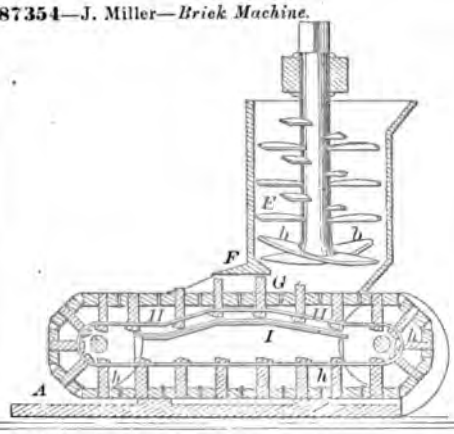

87355—F. Myers—*Velocipede.*

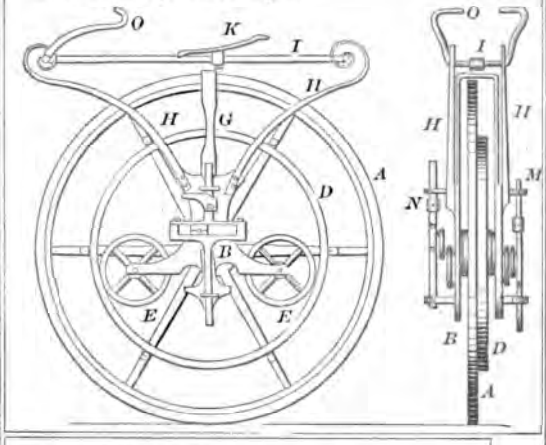

87356—G. Notman—*Plow.*

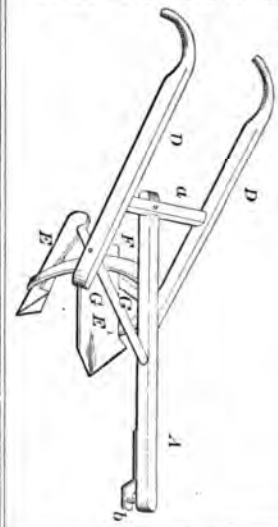

87358—C. H. Paine—*Carriage Jack.*

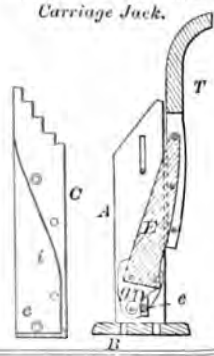

87359—H. L. Palmer—*For the Manufacture of Pasteboard.*

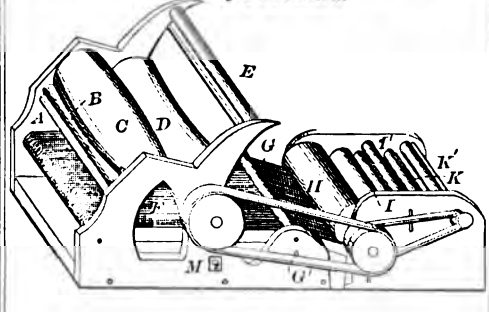

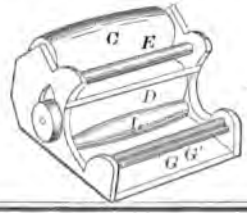

87357—A. B. Overbaugh—*Ditching Machine.*

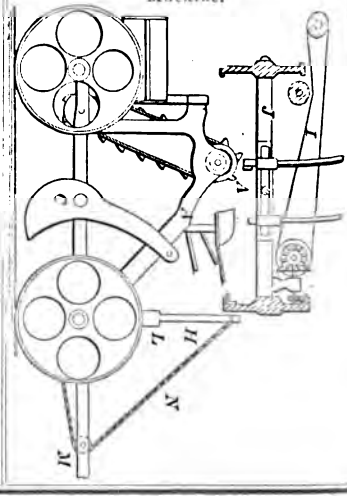

87376—H. Smith—*Corn Planter, Grain Drill and Harrow.*

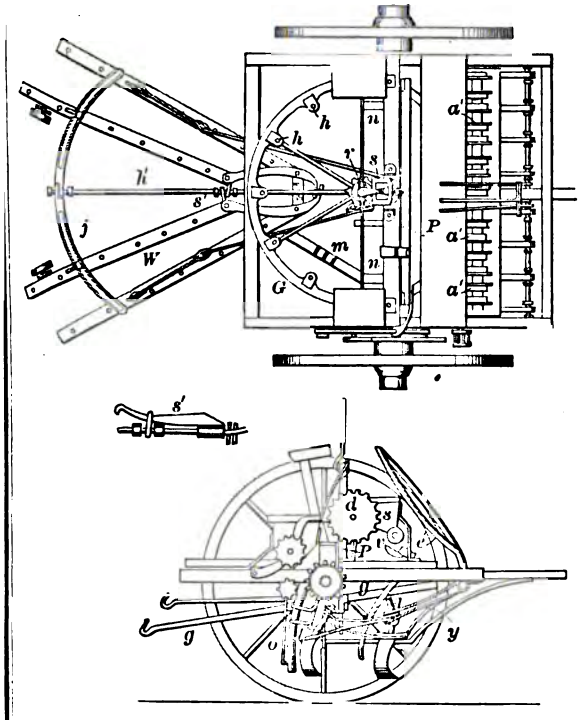

87379—R. C. Sturges—*Sweat Shield for Saddle Pads.*

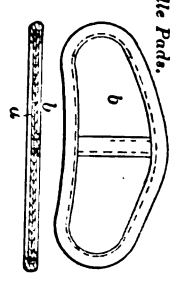

87380—Sugg & Metz—*Bedstead Fastening.*

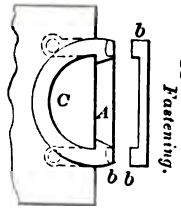

87377—J. Speight—*Spinning Machine.*

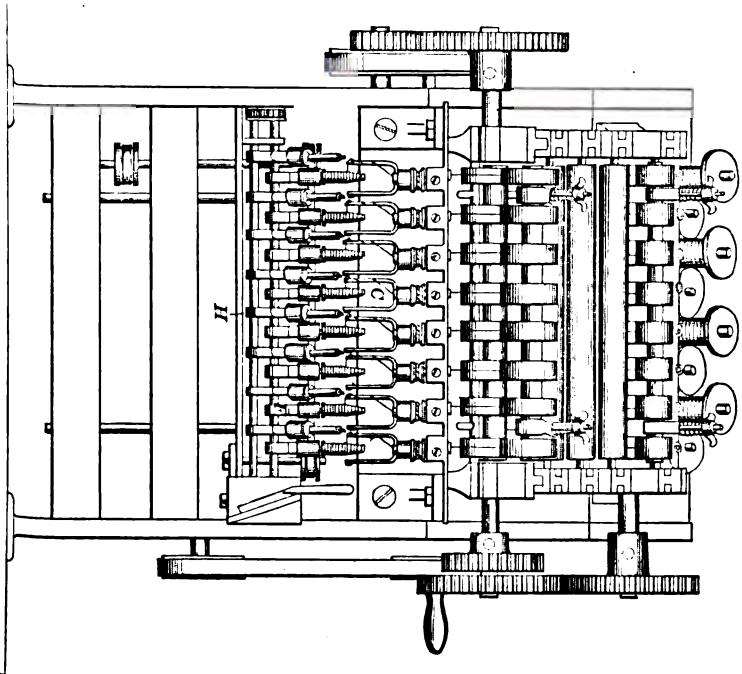

87381—W. G. Tuttle—*File for Gauging the Teeth of Cross Cut Saws.*

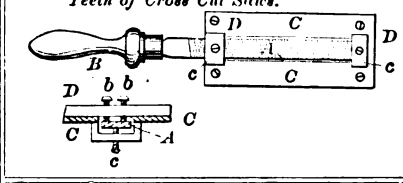

87385—A. S. Winchester—*Screen fo*

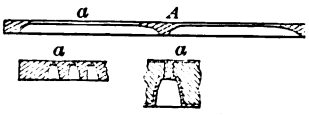

87383—M. N. Ward—*Hay Spreader.*

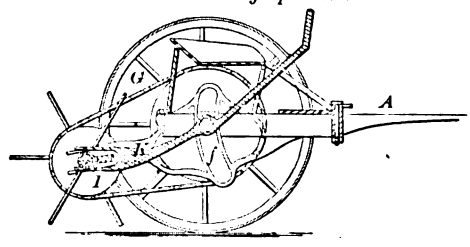

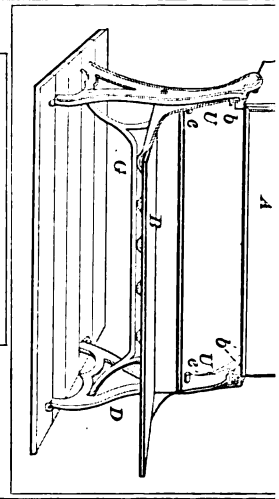

87387—H. Allen—*Valve of Steam Gun for Separating and Disintegrating Fibres*

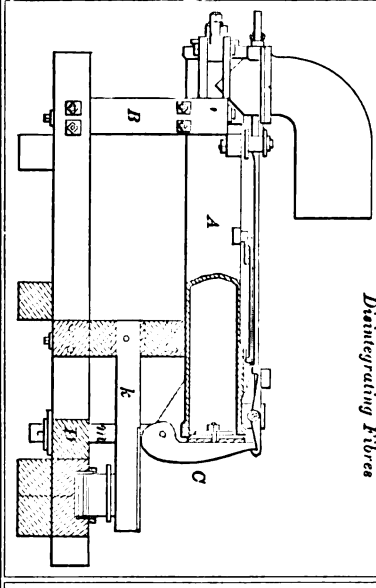

87388—A. Angell—*Hulling Mac*

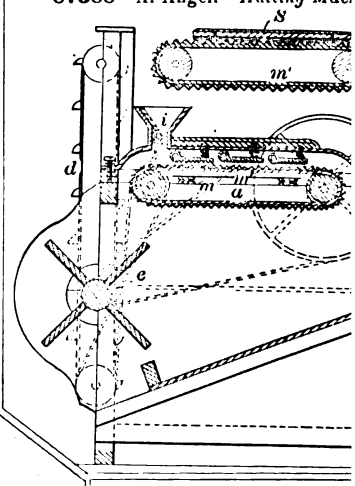

87392—N. Brand—*Hay Spreader.*

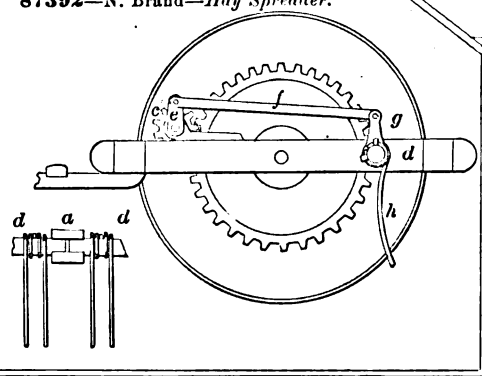

87384—W. Rickie—*Hor*

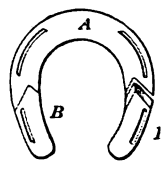

87389—F. App—*Scaffold.*

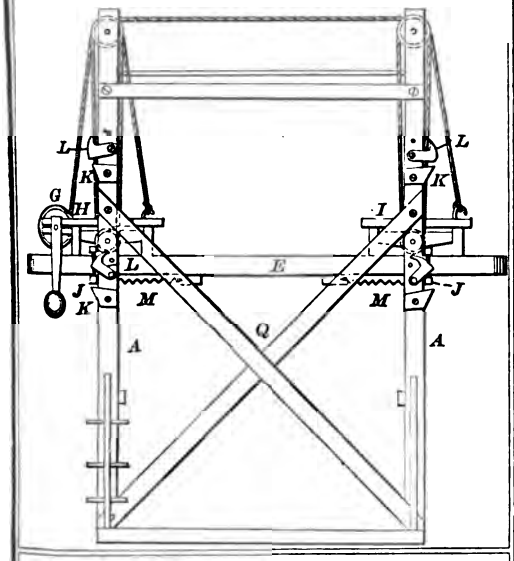

87394—R. W. Carpenter—*Reed Organ.*

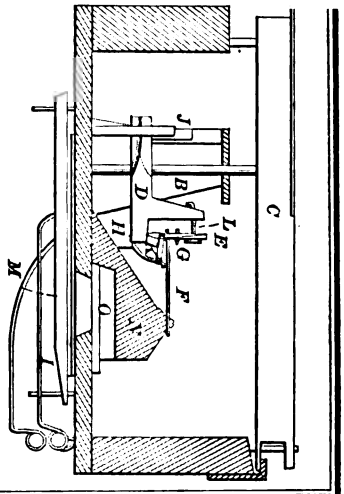

87395—R. W. Carpenter—*Operating Tremolos in Organs.*

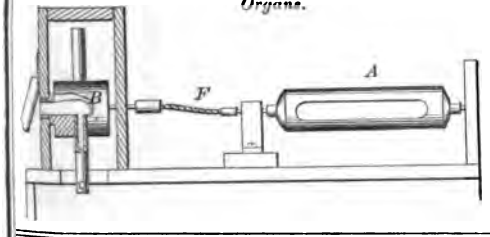

87396—L. R. Chapman—*Hinge.*

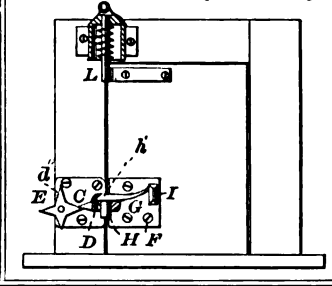

87399—C. C. Dow—*Car Jumper.*

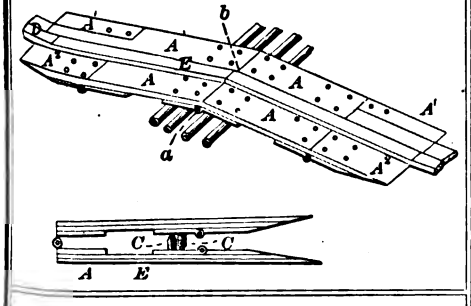

87398—J. Clees—*Plow Truck.*

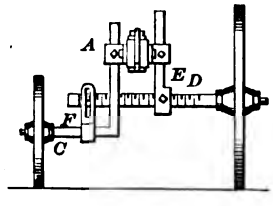

87400—D S. Early—*Cultivator.*

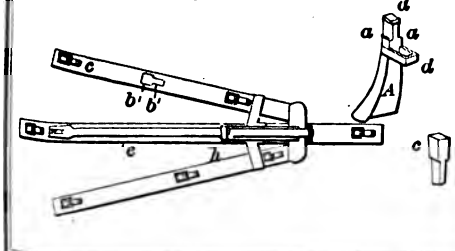

87401—B. M. Ely—*Cultivator.*

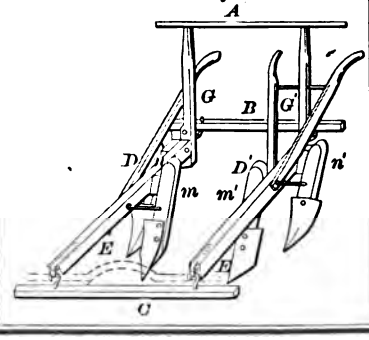

87381—W. G. Tuttle—*File for Gauging the Teeth of Cross Cut Saws.*

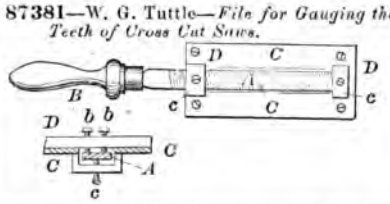

87385—A. S. Winchester—*Screen for Paper Pulp.*

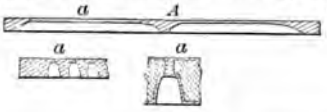

87383—M. N. Ward—*Hay Spreader.*

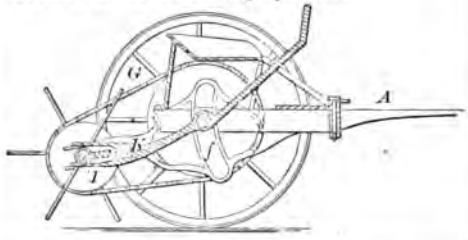

87386—W. S. Winchester—*Screen for Paper Pulp.*

87387—H. Allen—*Valve of Steam Gun for Separating and Disintegrating Fibres*

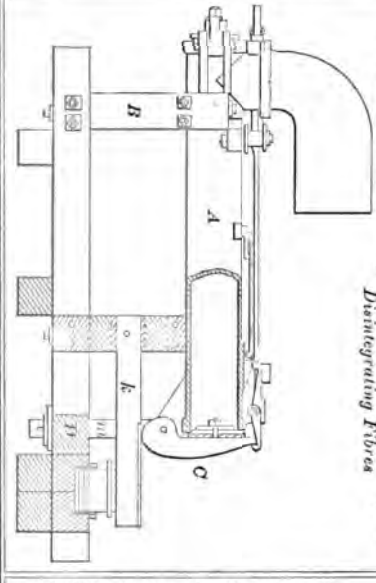

87388—A. Angell—*Hulling Machine.*

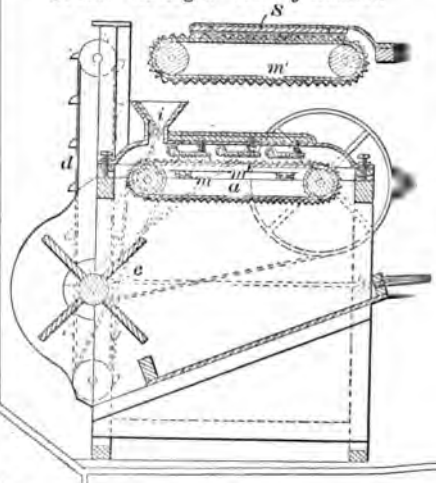

87392—N. Brand—*Hay Spreader.*

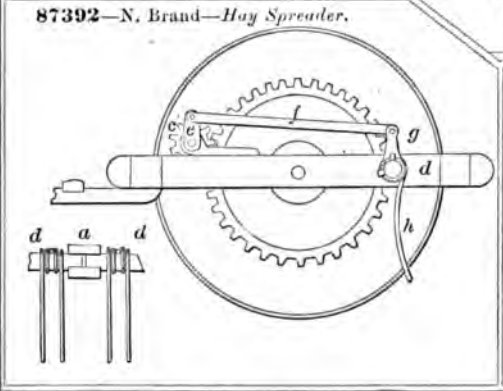

87384—W. Riekie—*Horse Shoe.*

87409—A. Harroun, Jr.—*Button Hole Sewing Machine.*

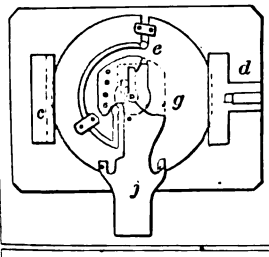

87411—F. Hayek—*Lounge.*

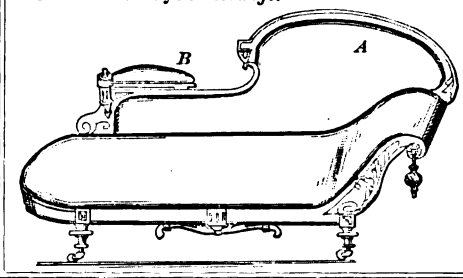

87410—G. Hauschild—*Roulette Apparatus.*

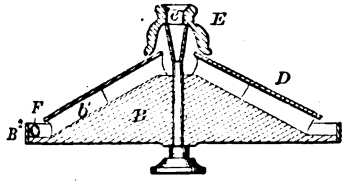

87412—J. P. Hemmingsen—*Bellows.*

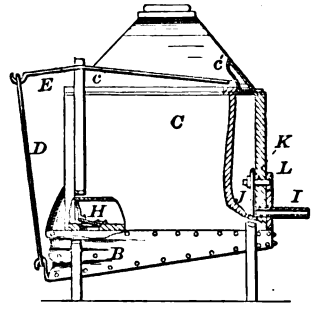

87415—J. I. Livingston—*Cap for Cans.*

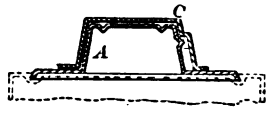

87413—B. Holly—*Water Supply Regulator for Water Works.*

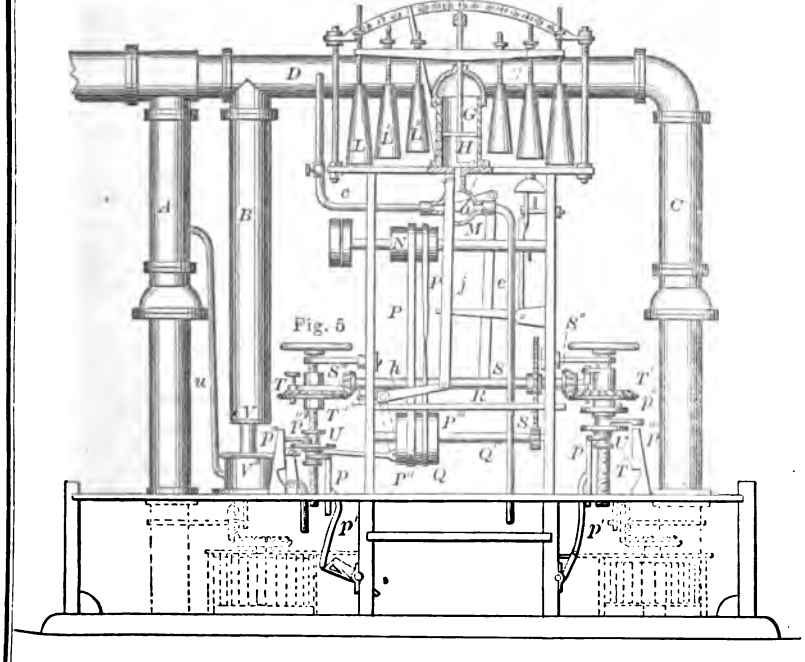

87260—W. M. Hughes—*Tire Upsetter.*

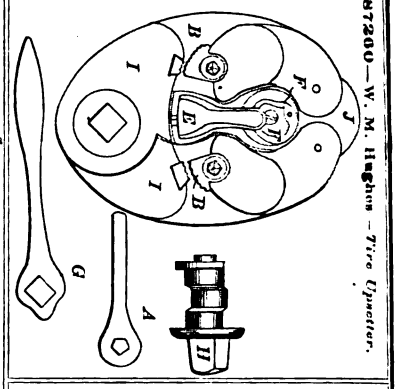

87258—A. Holbrook, Jr.—*For Sewing Books.*

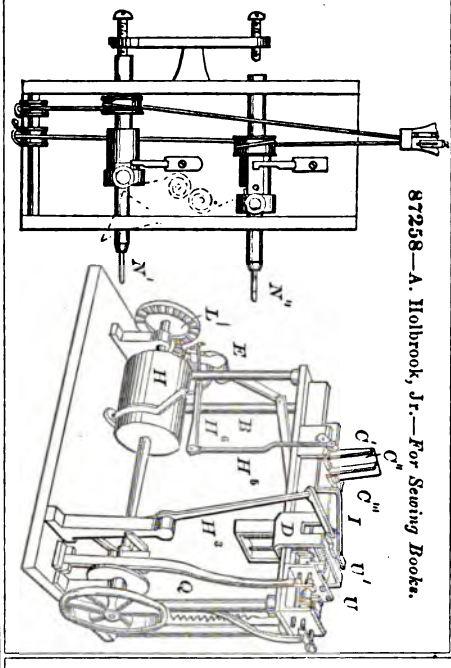

87265—W. M. King—*Milk Cooler.*

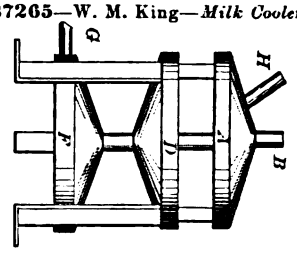

87259—Howe & Hartford—*Velocipede.*

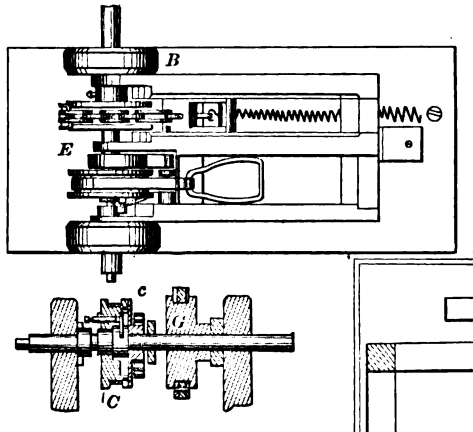

87262—L. A. Jefferson—*Button.*

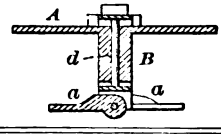

87201—C. S. Hutchinson—*For Making Tugs.*

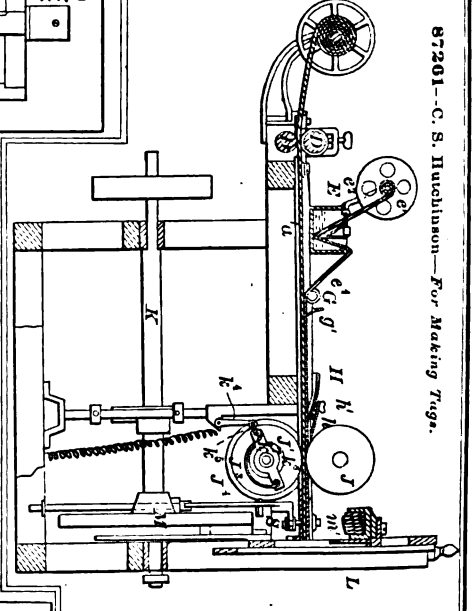

87409—A. Harroun, Jr.—*Button Hole Sewing Machine.*

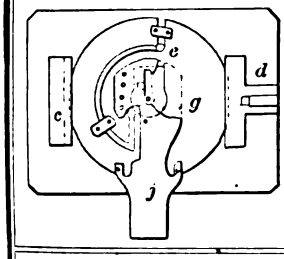

87411—F. Hayek—*Lounge.*

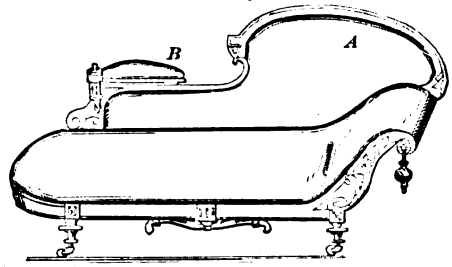

87410—G. Hauschild—*Roulette Apparatus.*

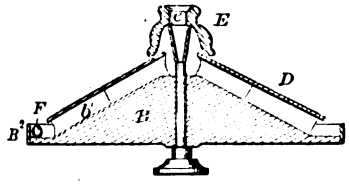

87412—J. P. Hemmingsen—*Bellows.*

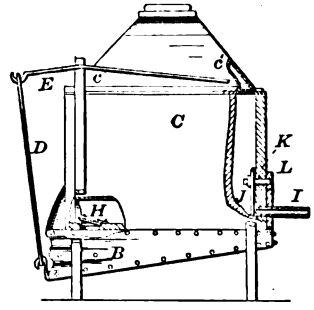

87415—J. I. Livingston—*Cap for Cans.*

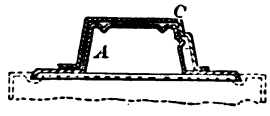

87413—B. Holly—*Water Supply Regulator for Water Works.*

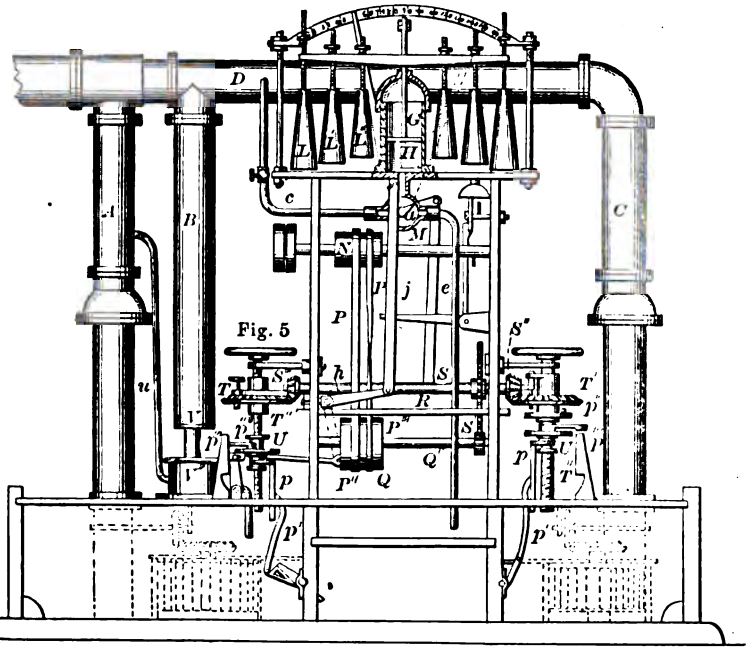

Fig. 5

87417—J. E. Mansker—*Fan Attachment for Tables.*

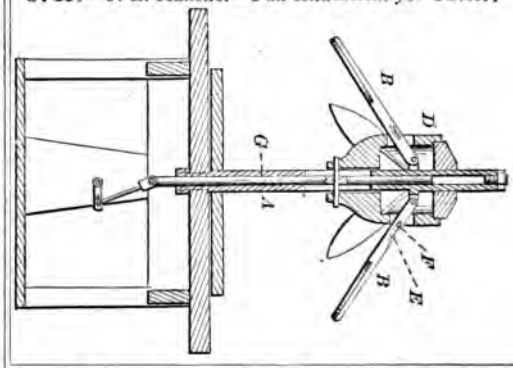

87419—H. B. Martin—*Oscillating Engine.*

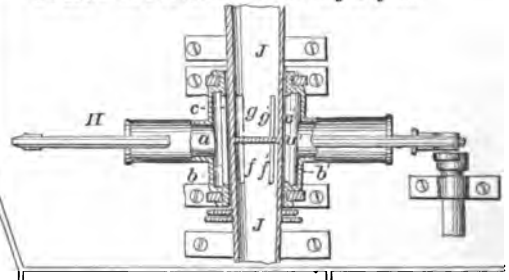

87414—J. Jeffcoat—*Seed Planter.*

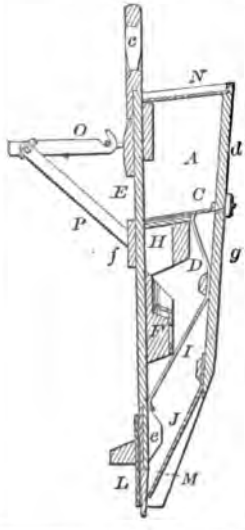

87416—Lockwood & Schmitt—*Brick Machine.*

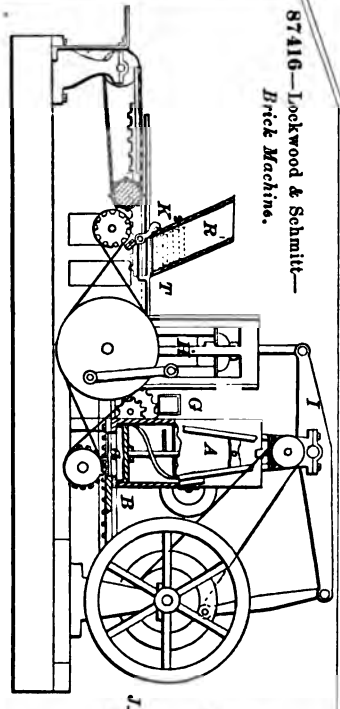

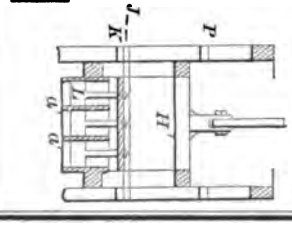

87418—M. R. Margerum—*Sash Fastener.*

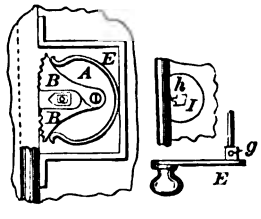

87420—E. G. Matthews—*Plow.*

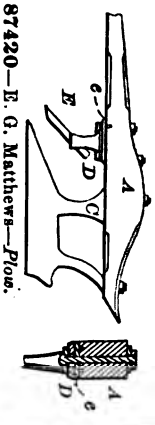

87421—E. G. Matthews—*Plow Clevis.*

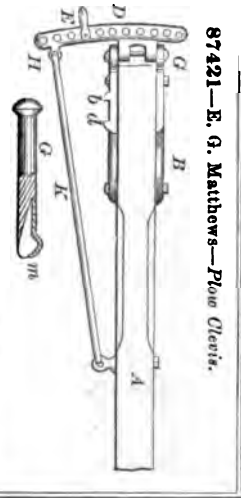

87422—J. McGloskey—*Steam Trap and Overflow for Basins.*

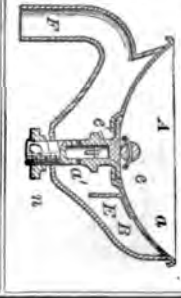

87441—W. P. Springer—*Smut Machine.*

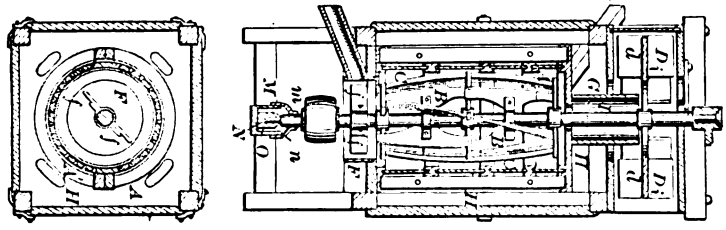

87443—Sullivan & Reedy—*Paper File.*

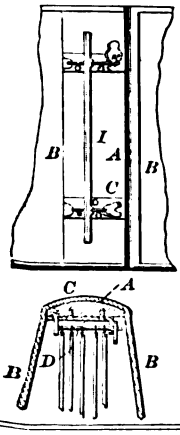

87444—A. Tappe—*Smoking Pipe and Cigar Holder.*

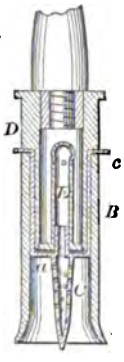

87445—T. R. Timby—*Car Wheel.*

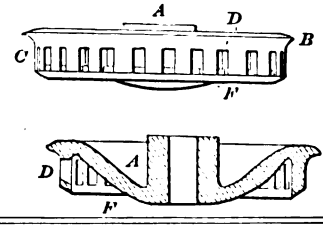

87446—T. R. Timby—*For Preserving Butter and other Articles.*

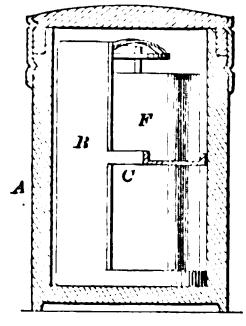

87447—G. Verplaetse—*Barrel.*

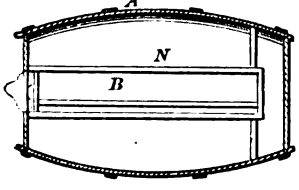

87448—H. B. Verry—*Valve Gearing.*

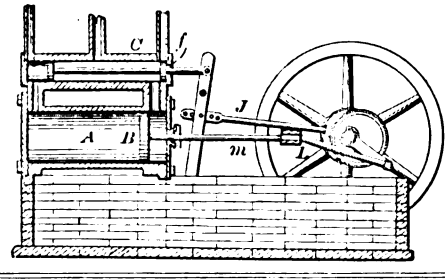

87449—E. Wakeman—*Boat Detaching Apparatus.*

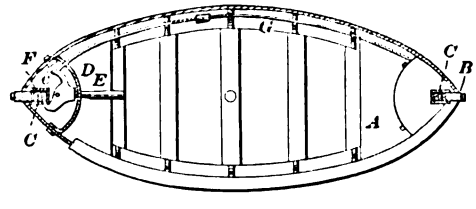

87450—S. Wheeler—*Horse Power.*

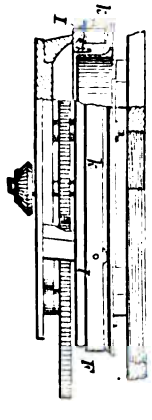

87451—L. F. & O. P. Whitman—*Shoe Fastening.*

87452—P. F. Whitney—*For Loading Ice.*

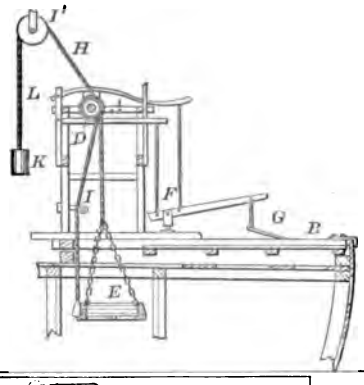

87453—D. Williamson—*Mining Mac*

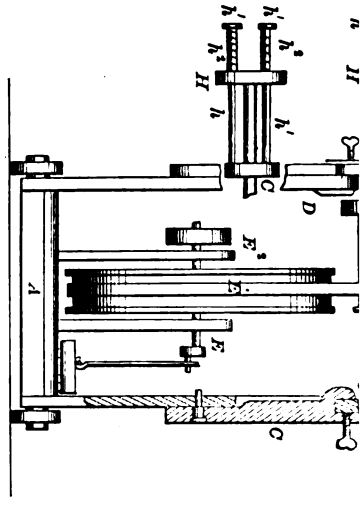

87455—Aiken, McAllister & Morris—*Burning Kiln for Brick, Tiles, &c.*

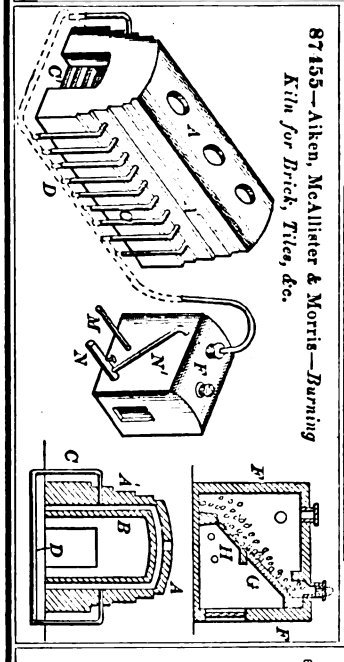

87454—C. P. Winslow—*Cattle Tie.*

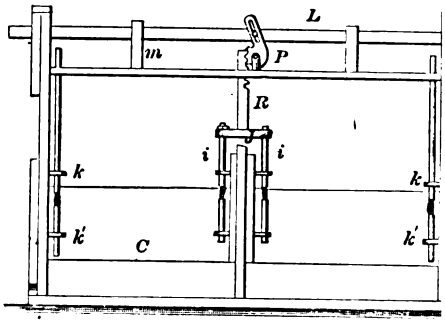

87457—D. Arndt—*Clothes Mangle.*

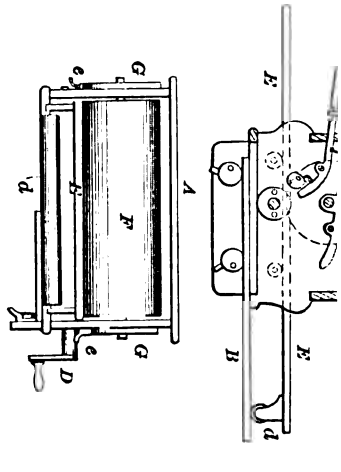

87456—H. Aland—*Fan.*

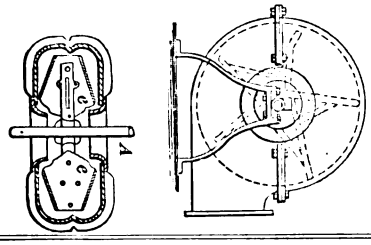

87458—J. Ball—*Plow Clevis Link.*

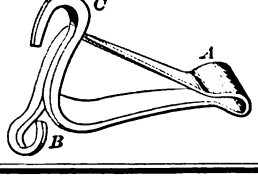

87459—J. W. Bates—*Stove Pipe.*

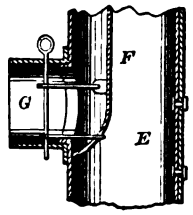

87460—G. W. R. Bayley—*Lock Nut.*

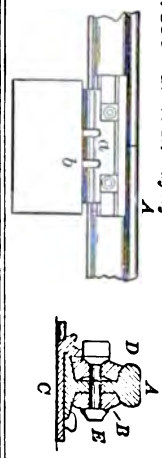

87461—S. Boden—*Violin Bridge.*

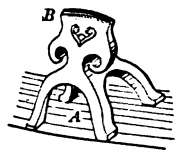

87462—B. Briscoe—*Locomotive Alarm Bell.*

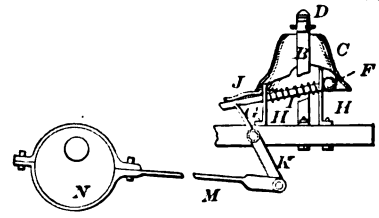

87463—S. S. Brown—*Bed and Bedstead.*

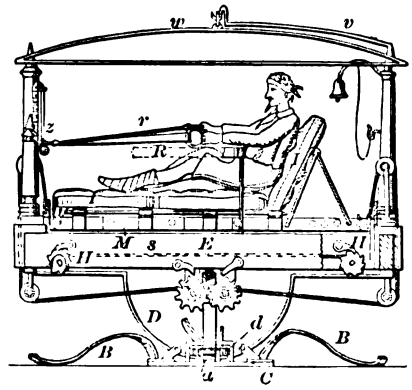

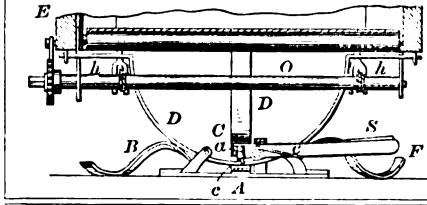

87464—D. C. Burdick—*Punch Shears and Iron Shrinker.*

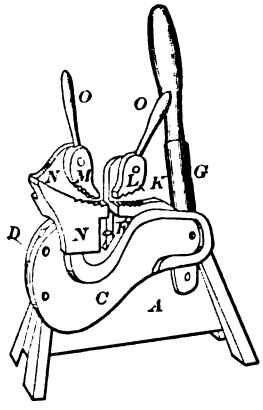

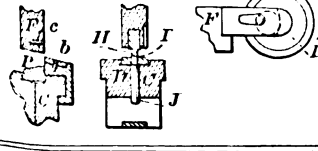

87466—C. Carpenter—*Gas Manufacture.*

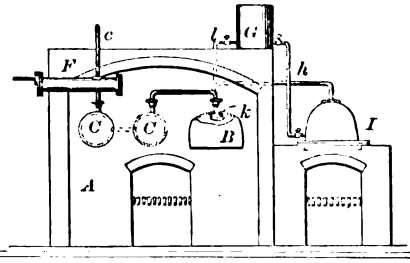

87465—D. P. Butler—*Lifting Apparatus.*

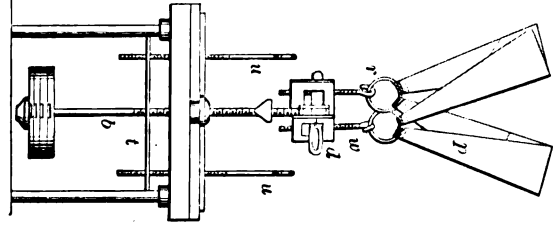

87469—E. S. Collamer—*Shutter Fastener.*

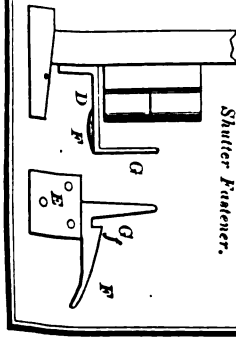

87452—P. F. Whitney—*For Loading Ice.*

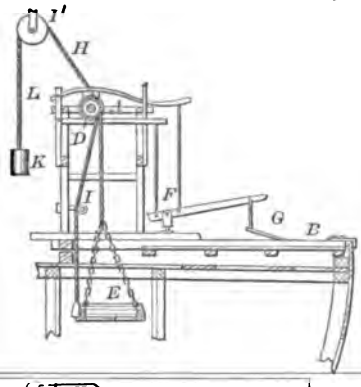

87453—D. Williamson—*Mining Machine.*

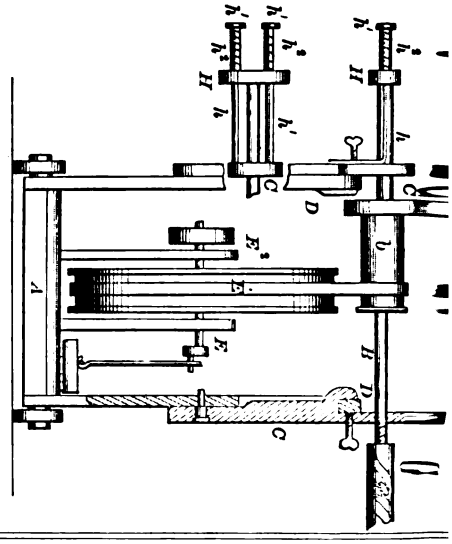

87455—Aiken, McAllister & Morris—*Burning Kiln for Brick, Tiles, &c.*

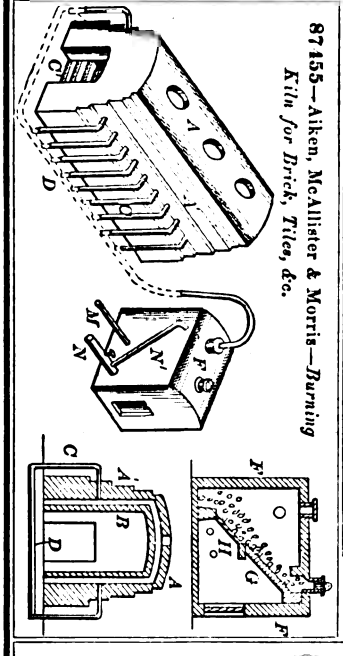

87454—C. P. Winslow—*Cattle Tie.*

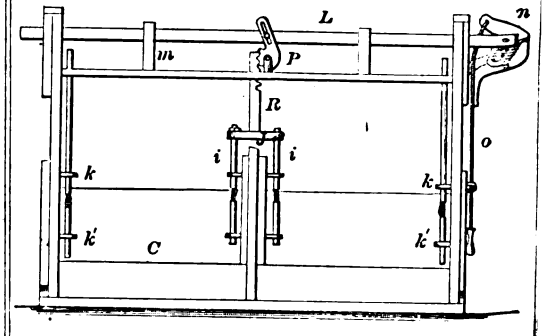

87457—D. Arndt—*Clothes Mangle.*

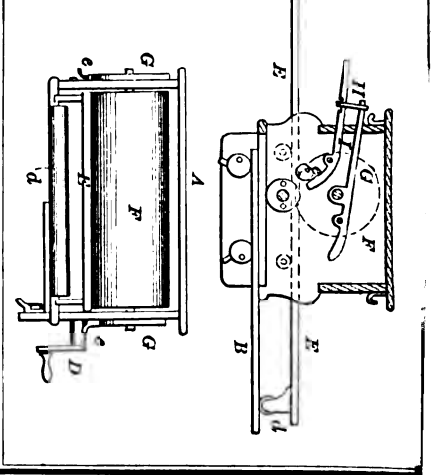

87456—H. Aland—*Fan.*

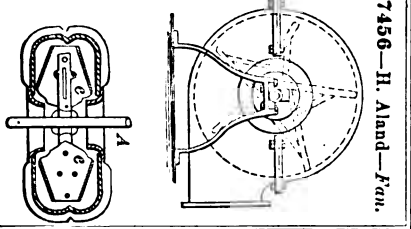

87458—J. Ball—*Plow Clevis Link.*

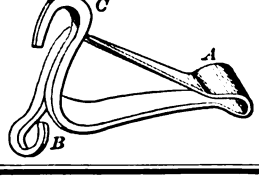

87478—C. M. T. du Motay—*For Generating Combustible Gases.*

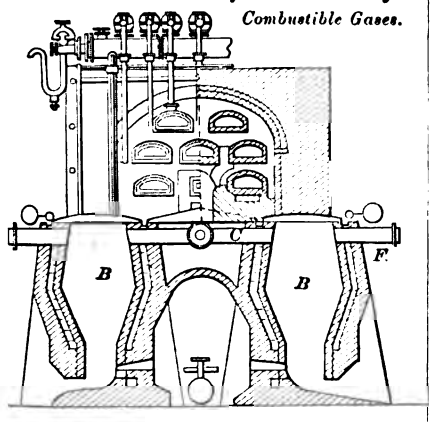

87480—R. N. Eagle—*Lamp Burner.*

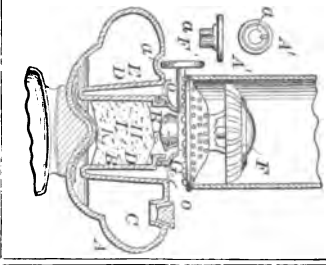

87484—Gero & Cooley—*Plow Point.*

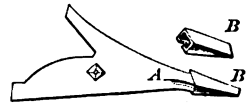

87479—C. M. T. du Motay—*Iron and Steel Manufacture.*

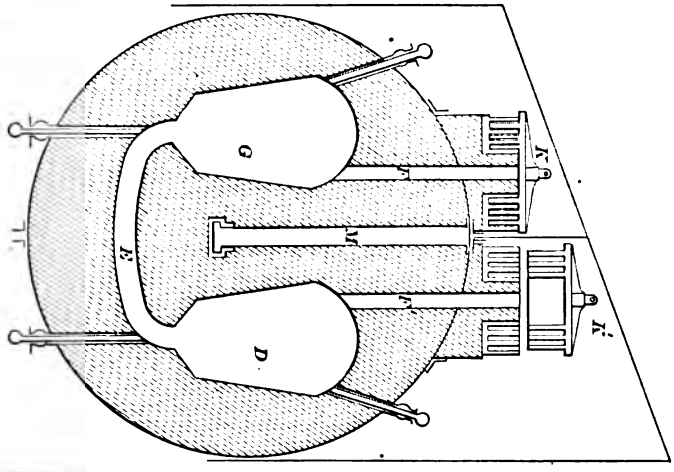

87482—C. J. Everett—*For Rendering Lard, Tallow, &c.*

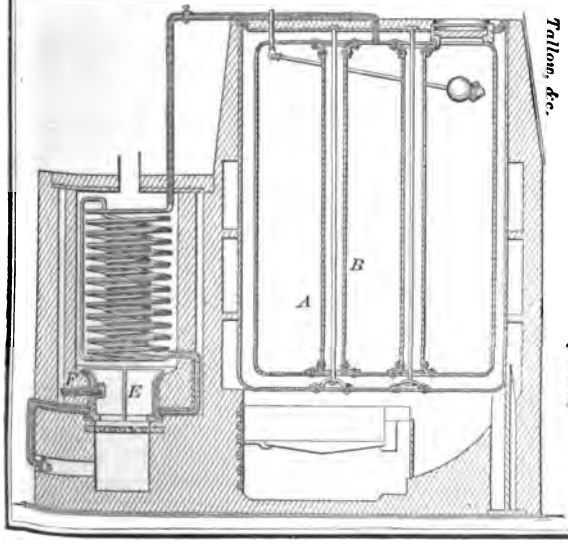

87481—H. Eichler—*Leather Cutting Machine.*

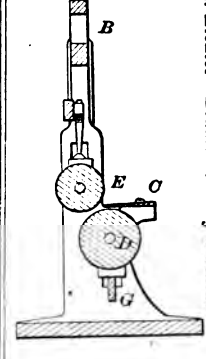

87468—M. R. Clapp—*Steam Engine Mechanism.*

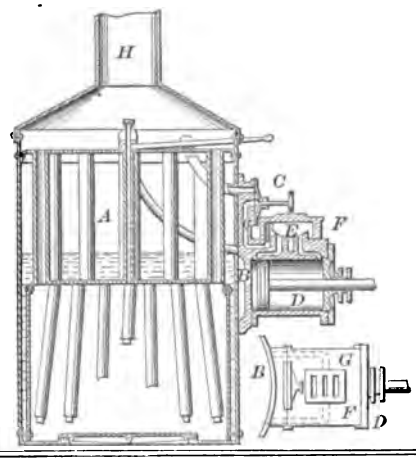

87470—S. W. Corbin—*Post Hole Auger.*

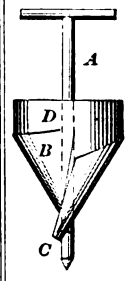

87471—J. E. Cowdery—*Three Horse Equalizer.*

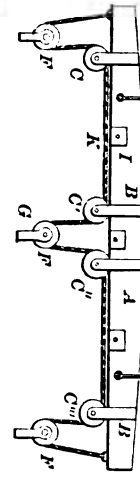

87473—J. B. Crosby—*Nailing or Pegging Machine.*

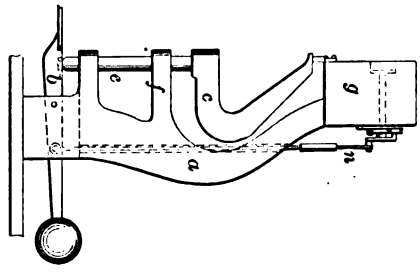

87474—F. Davison—*For Making Spikes.*

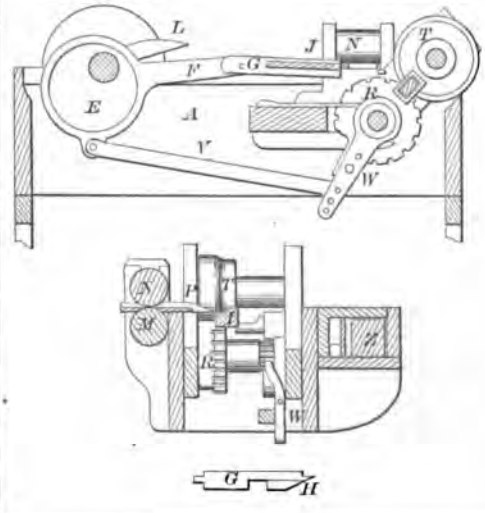

87470—C. M. T. du Motay—*For Burning Gases.*

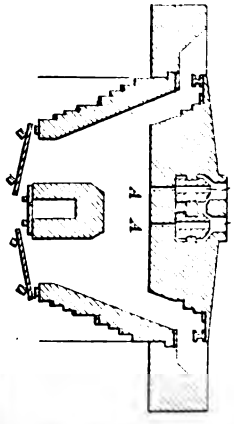

87472—A. C. Cleary—*Railroad Car Heater.*

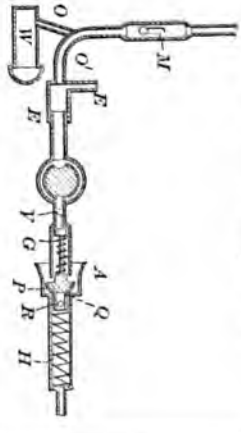

87492—G. J. Hayes—*Cultivator.*

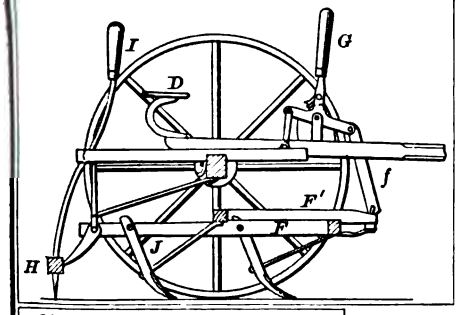

87493—F. A. Henckell—*For Bundling Cigars.*

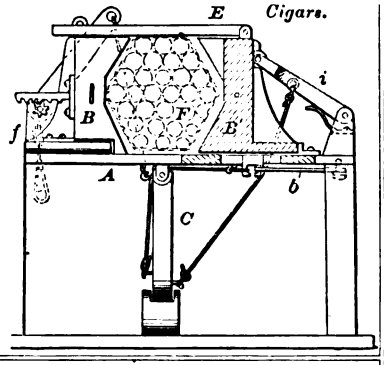

87494—W. H. Henderson—*For Soldering Tin Cans.*

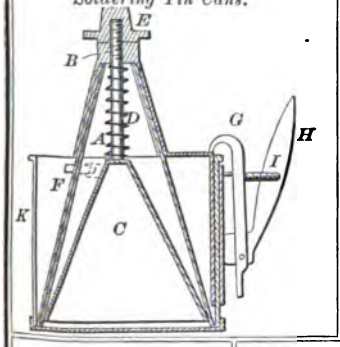

87495—J. W. Hopkins—*For Brushing and Napping Hats.*

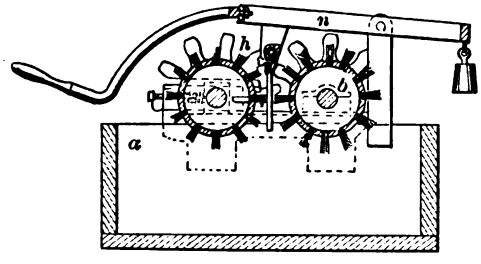

87496—R. B. Hugunin—*Car Wheel.*

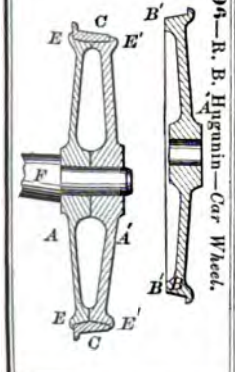

87497—T. Itzstein—*For Checking Horses.*

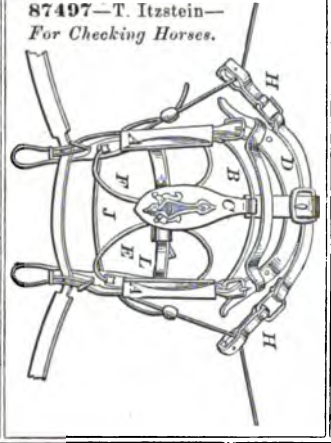

87499—S. B. Kline—*Fly Net.*

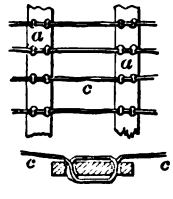

87500—Le G. Kniffen—*Buckle.*

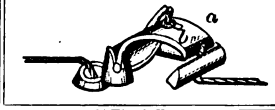

87498—R. H. Jones—*Projectile.*

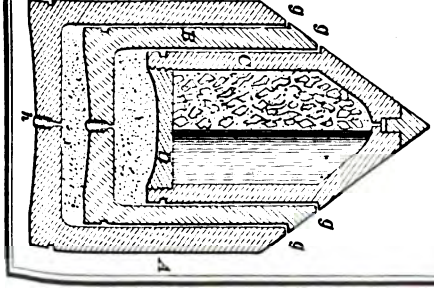

87501—E. Lane—*Thill Coupling.*

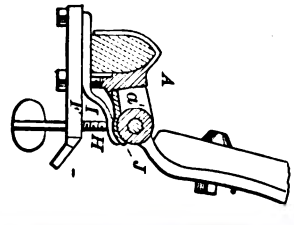

87502—A. Lee—*Wash Boiler.*

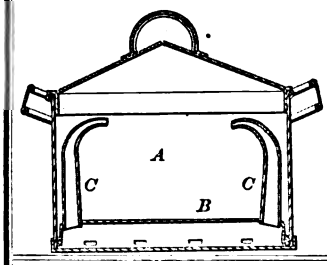

87503—W. B. Mason—*Flat Iron Scraper, Polisher and Stand.*

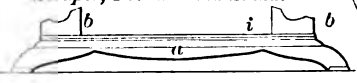

87504—G. M. L. McMillen—*Horse Rake.*

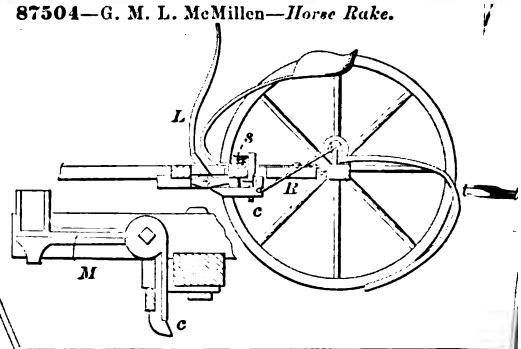

87505—J. J. Morrison—*Cotton Press.*

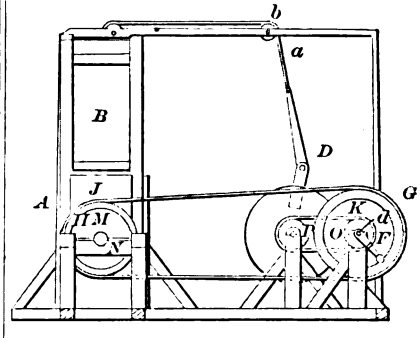

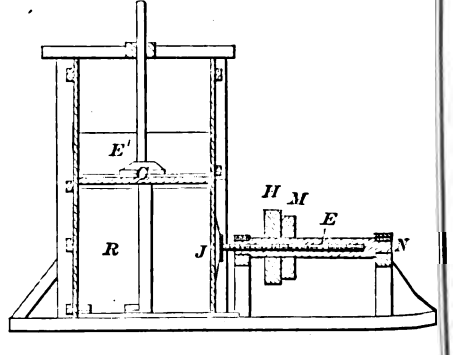

87506—T. G. Otterson—*Glass Mould.*

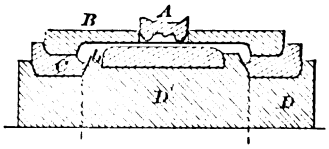

87507—D. O. Paige—*For Hardening Steel.*

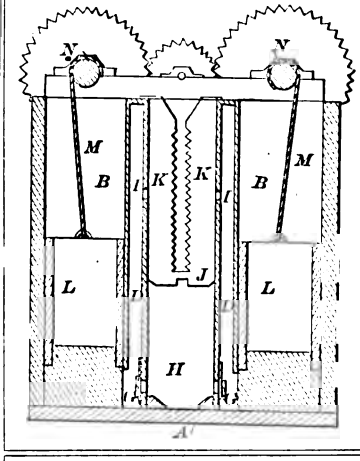

87508—R. Peberdy—*Knitting Machine.*

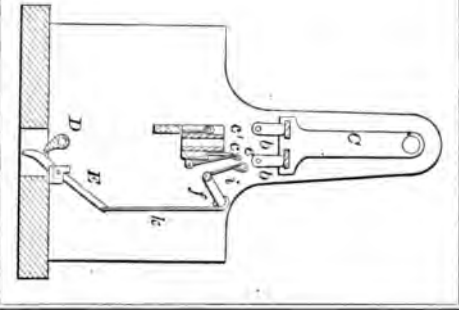

87509—D. T. Peck—*Piano Forte.*

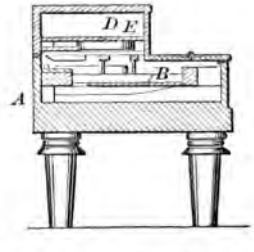

87510—F. P. Pfleghar—*Knob Latch.*

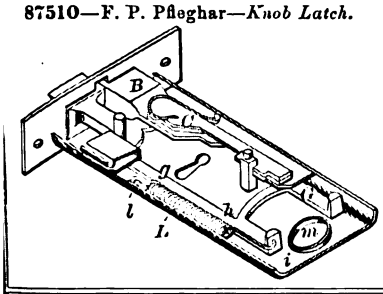

87511—J. Pons—*Lamp Extinguisher.*

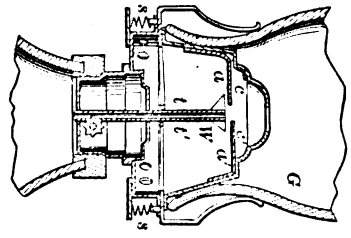

87512—G. Reynolds—*For Rolling Metals.*

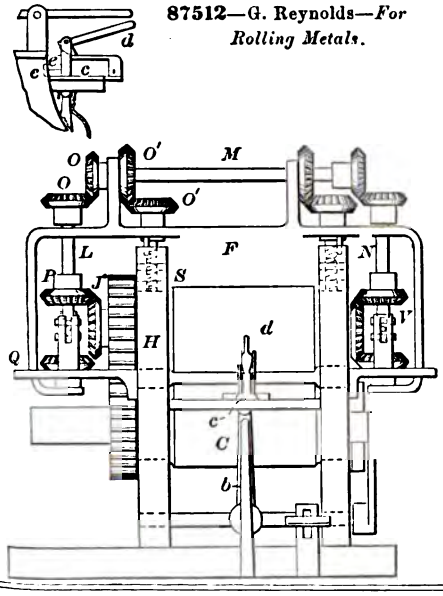

87513—I. Robbins—*Water Meter.*

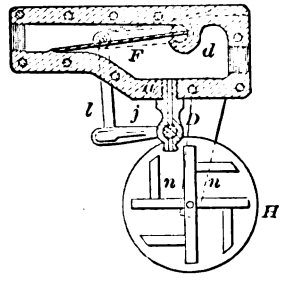

87514—I. Robbins—*Lock.*

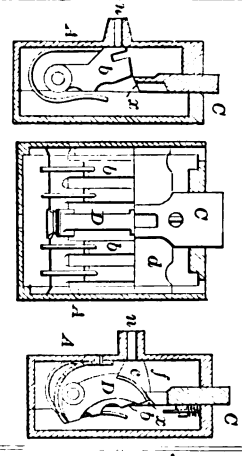

87516—T. A. Searle—*Liquid Meter.*

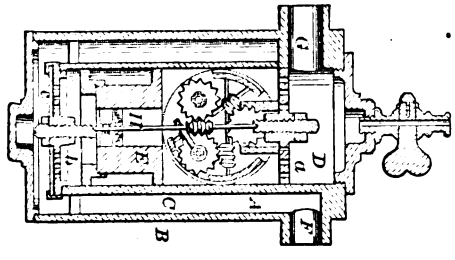

87515—S. B. Rowley—*Fastening for Fruit Jars.*

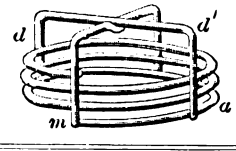

87517—J. Y. Smith—*Wooden Railway.*

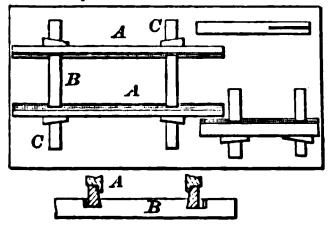

87518—F. W. Smith, Jr.—*Key.*

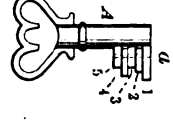

87519—E. Spaulding—*Furnace Stove and Register.*

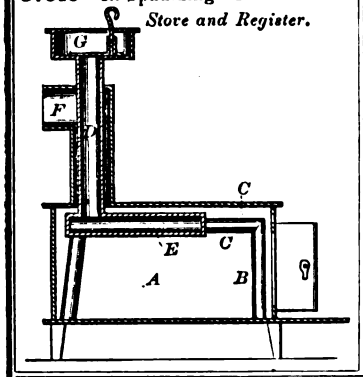

87522—M. Stratton—*Gas Cock.*

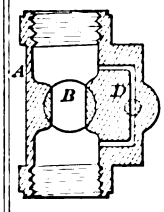

87523—D. F. Sturtevant—*Blower Case.*

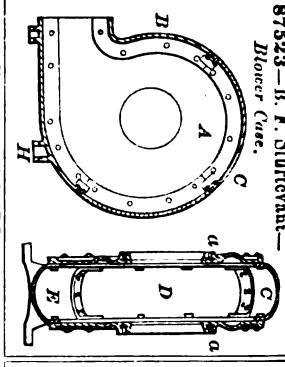

87520—G. H. Spaulding—*Chair.*

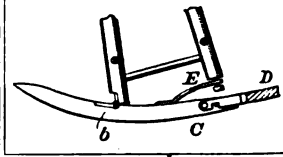

87521—E. P. Spencer—*Milk Cooler.*

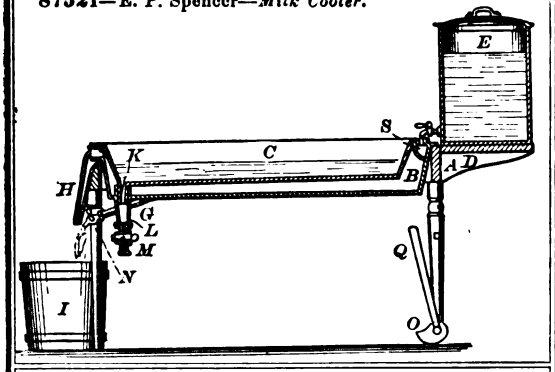

87525—G. Tefft—*Railway Rail Chair.*

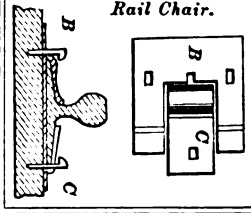

87524—R. R. Taylor—*Car Starter.*

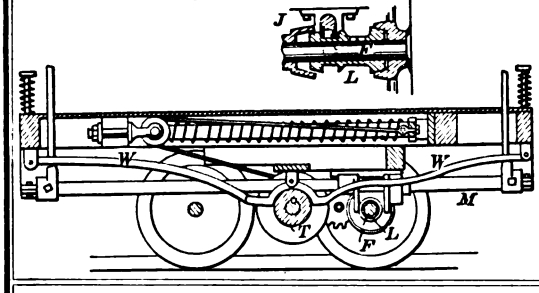

87527—J. J. Waldron—*Shifting Rail for Carriage Tops.*

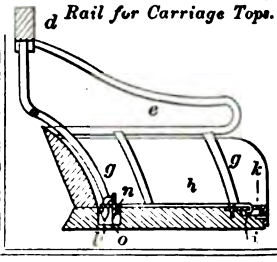

87528—H. Weber—*Warping Machine.*

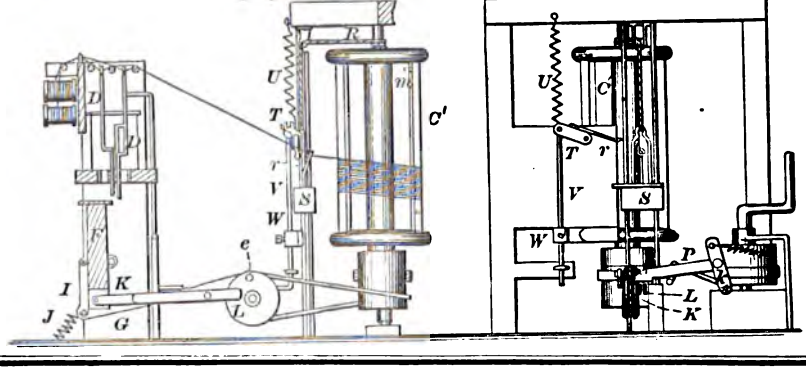

87510—F. P. Pfleghar—*Knob Latch.*

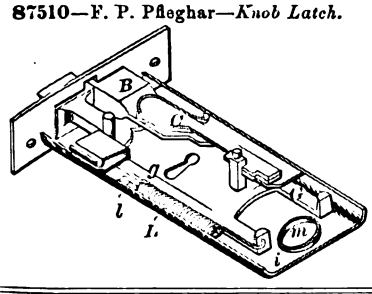

87511—J. Pons—*Lamp Extinguisher.*

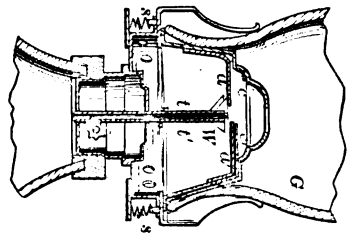

87512—G. Reynolds—*For Rolling Metals.*

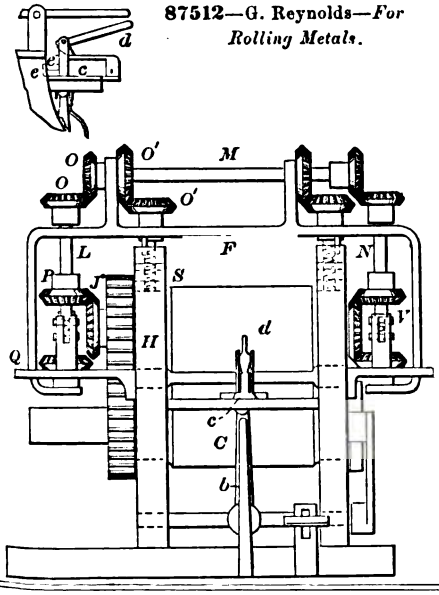

87513—I. Robbins—*Water Meter.*

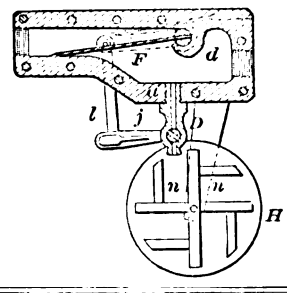

87514—I. Robbins—*Lock.*

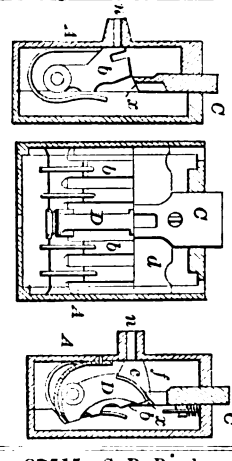

87515—S. B. Rowley—*Fastening for Fruit Jars.*

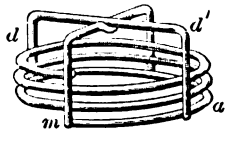

87516—T. A. Searle—*Liquid Meter.*

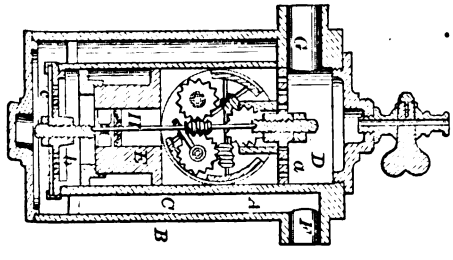

87517—J. Y. Smith—*Wooden Railway.*

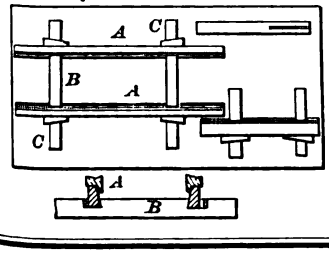

87518—F. W. Smith, Jr.—*Key.*

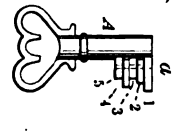

87519—E. Spaulding—*Furnace Stove and Register.*

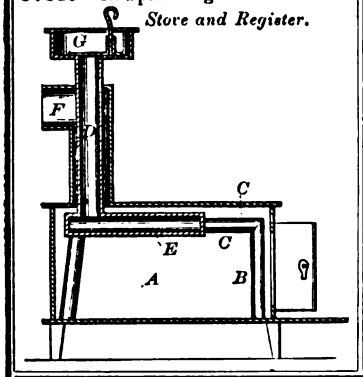

87522—M. Stratton—*Gas Cock.*

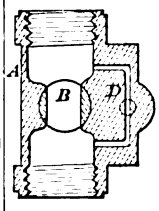

87523—D. F. Sherman—*Blower Case.*

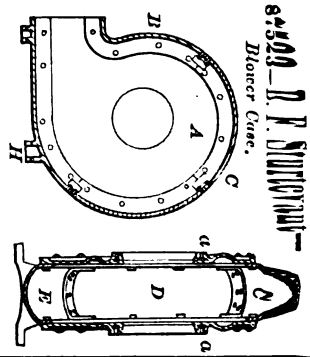

87520—G. H. Spaulding—*Chair.*

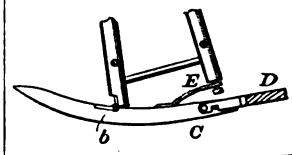

87521—E. P. Spencer—*Milk Cooler.*

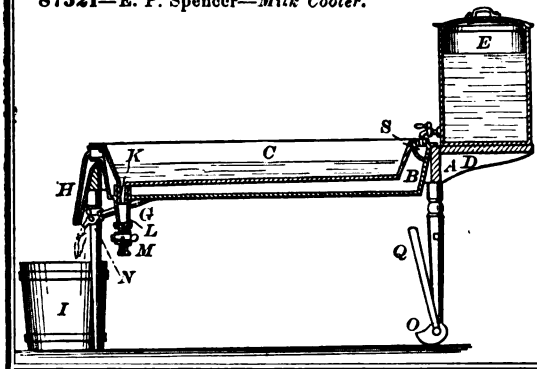

87525—G. Tefft—*Railway Rail Chair.*

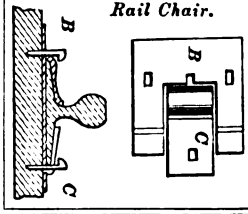

87524—R. R. Taylor—*Car Starter.*

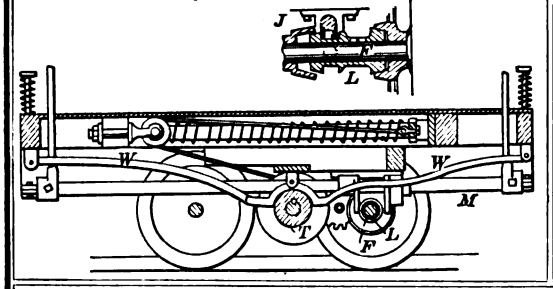

87527—J. J. Waldron—*Shifting Rail for Carriage Tops.*

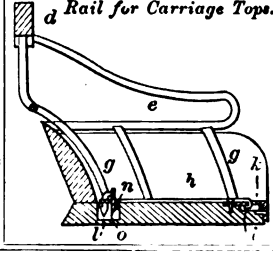

87528—H. Weber—*Warping Machine.*

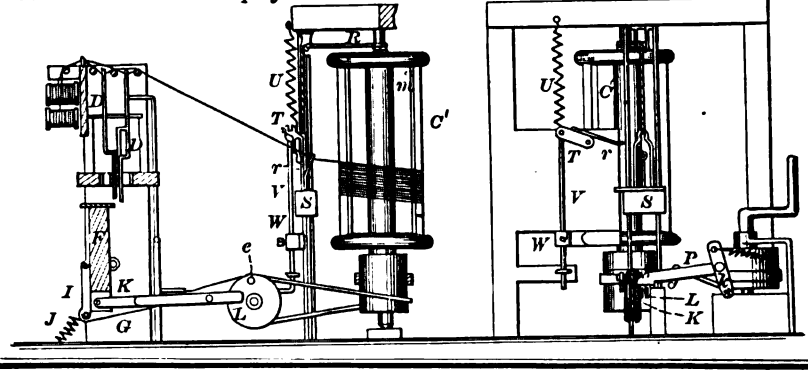

87541—J. S. Carson—*Cotton Bale Tie.*

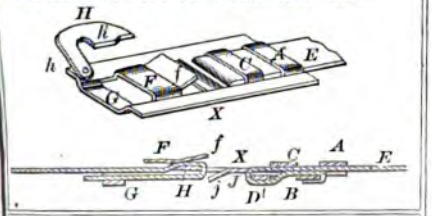

87542—Casement & Elliott—*Railway Gravel Spreader.*

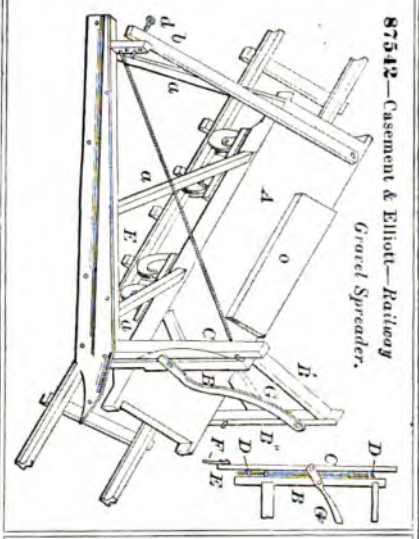

87544—G. Clark—*Fire Extinguisher.*

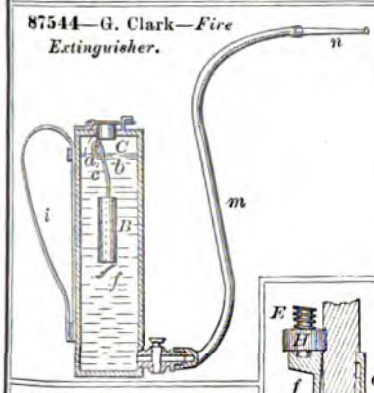

87547—L. Coes—*Wrench.*

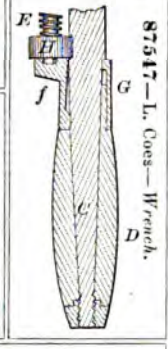

87543—H. E. Churchill—*Head Rest.*

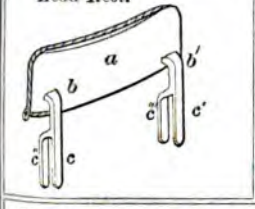

87546—J. A. Cleaveland—*For Threading Screws.*

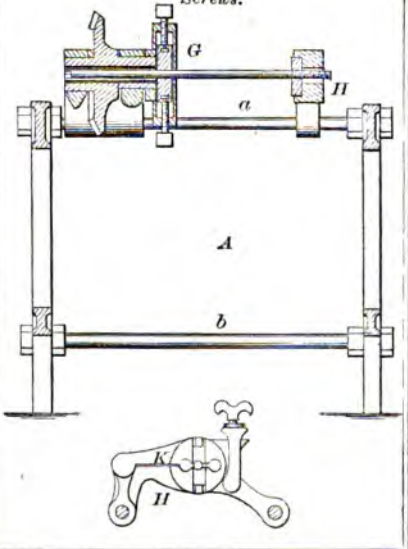

87548—H. H. Cottrill—*Animal Trap.*

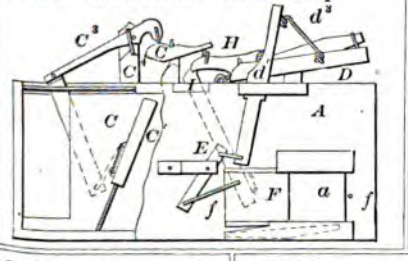

87545—A. H. Clay—*For Pasting and Hanging Wall Paper.*

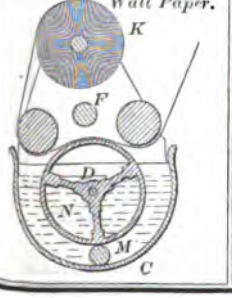

87549—G. Crouch—*Carpet Bag Catch.*

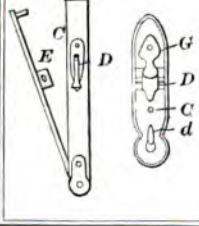

87550—G. H. & C. P. Deane & Gardiner—*Steam Engine.*

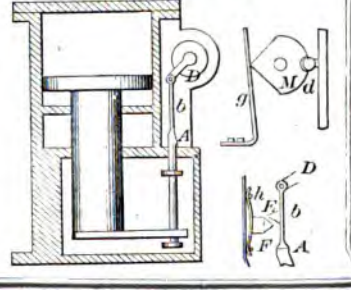

87452—P. F. Whitney—*For Loading Ice.*

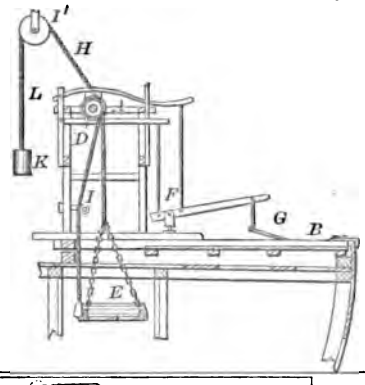

87453—D. Williamson—*Mining Machine.*

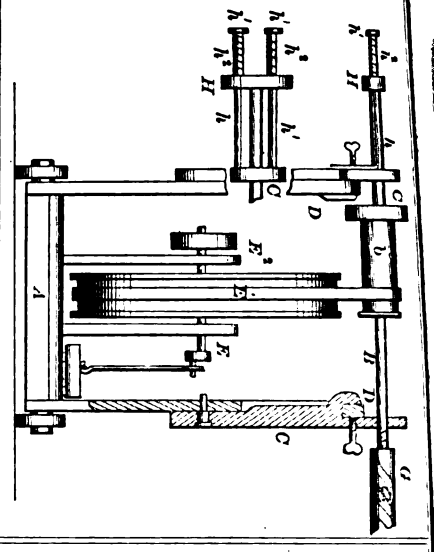

87455—Aiken, McAllister & Morris—*Burning Kiln for Brick, Tiles, &c.*

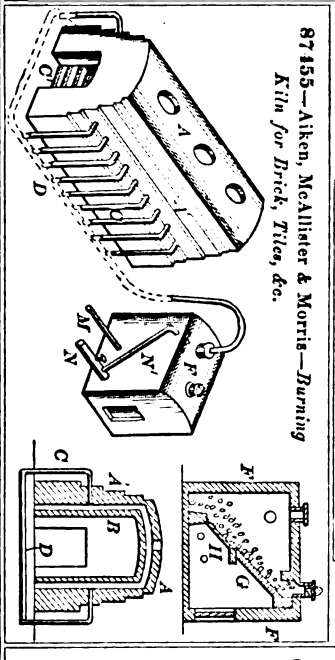

87454—C. P. Winslow—*Cattle Tie.*

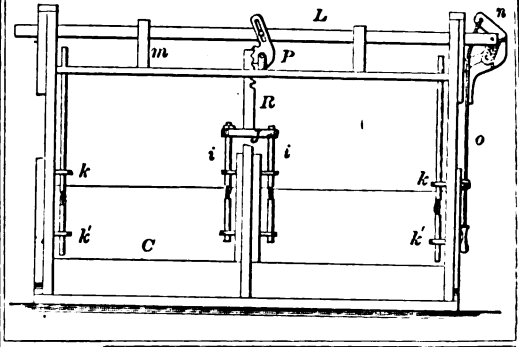

87456—H. Aland—*Fan.*

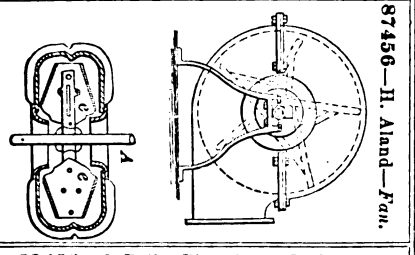

87457—D. Arndt—*Clothes Mangle.*

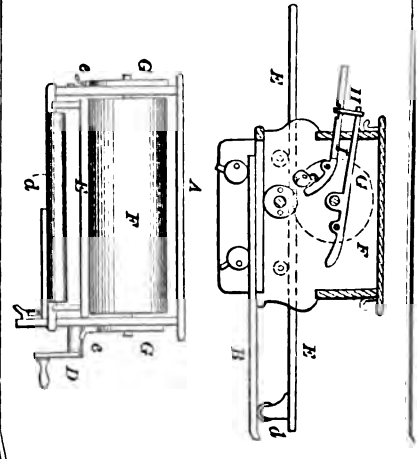

87458—J. Ball—*Plow Clevis Link.*

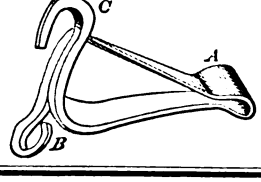

87558—M. J. Gaskill—*Fence.*

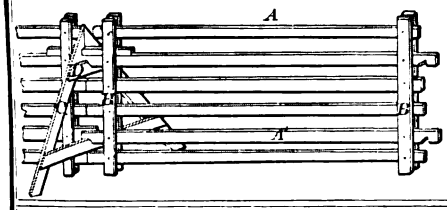

87564—M Helbling—*Grate Bar.*

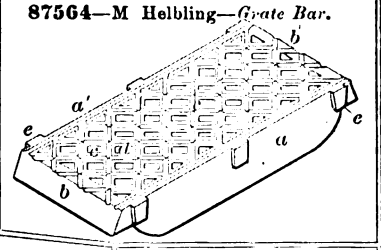

87559—E. D. Gird—*Sewing Machine.*

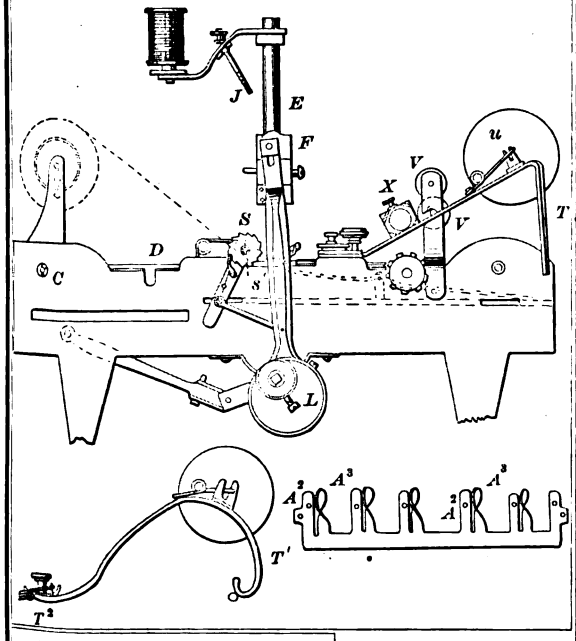

87563—M. Hancline—*Buckle.*

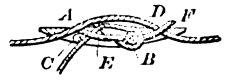

87565—J. A. Heyl—*Horse Shoe.*

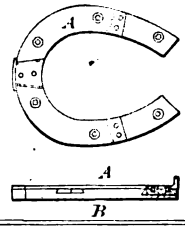

87568—G. H. Johnson—*Grain Bin.*

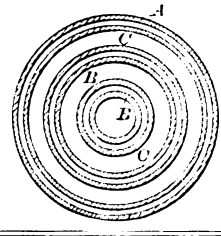

87566—O. A. Hill—*Bridge for Playing Pool.*

87561—A. B. Graham—*Harvester.*

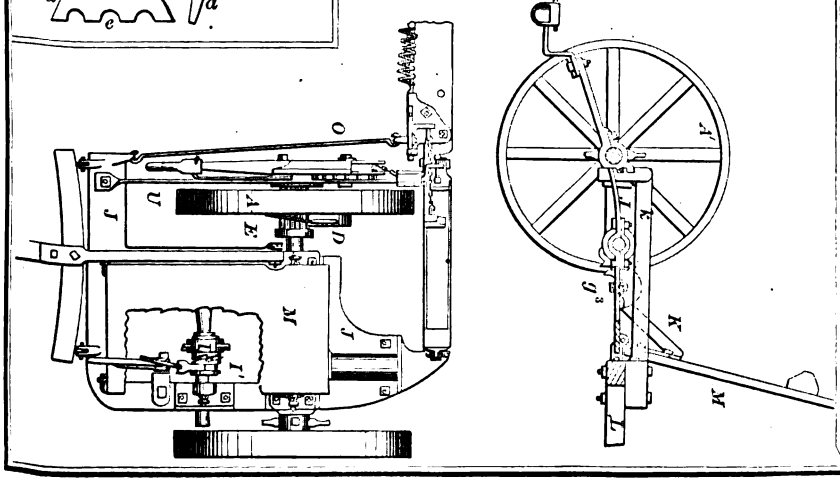

87468—M. R. Clapp—*Steam Engine Mechanism.*

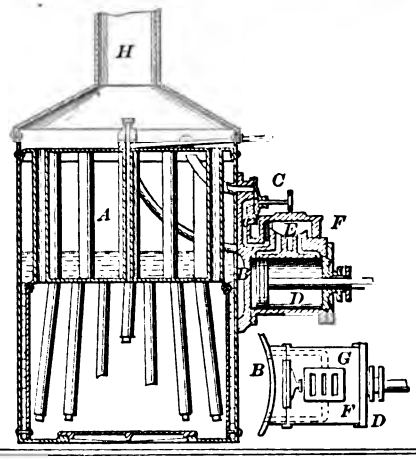

87470—S. W. Corbin—*Post Hole Auger.*

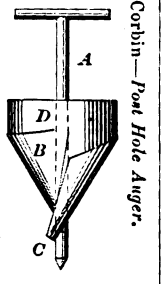

87471—J. E. Coveney—*Three Horse Equalizer.*

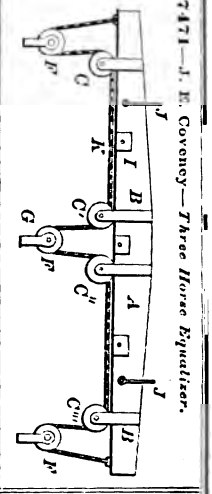

87473—J. B. Crosby—*Nailing or Pegging Machine.*

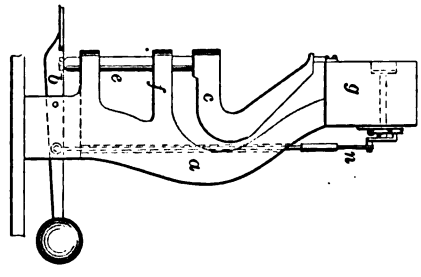

87474—F. Davison—*For Making Spikes.*

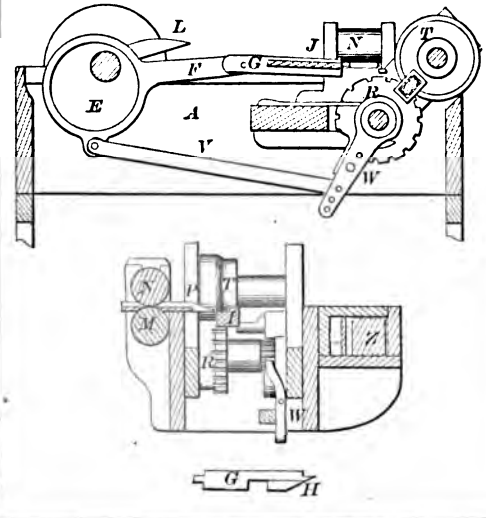

87470—C. M. T. du Motay—*For Burning Gases.*

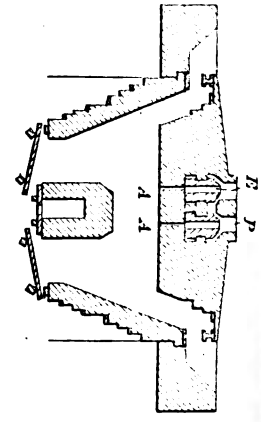

87472—A. C. Cracy—*Railroad Car Heater.*

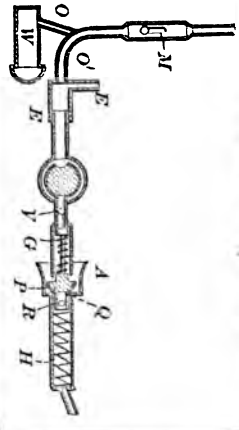

87577—N. B Marsh—*Harrow.*

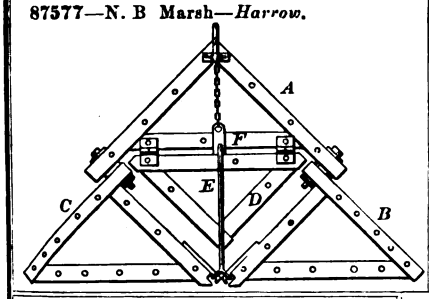

87578—H. McDonald—*Furnace.*

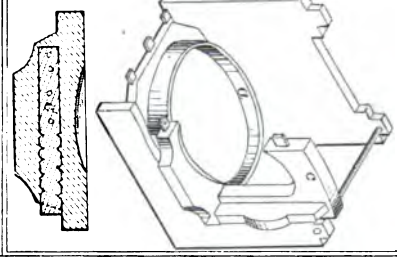

87579—W. McKeruhan—*Velocipede.*

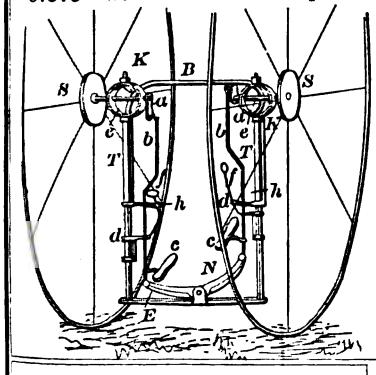

87581—N. Millington—*For Figuring Carpenters' Squares, &c.*

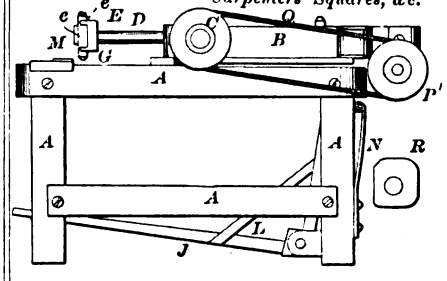

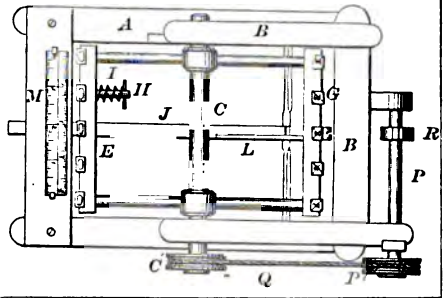

87585—J. Newlin—*Turbine Water Wheel.*

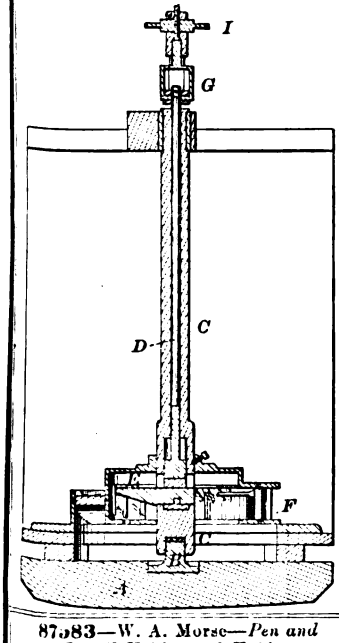

87582—H. T. Moody—*Car Coupling.*

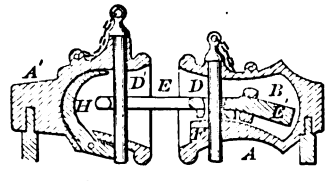

87583—W. A. Morse—*Pen and Pencil Holder and Knife.*

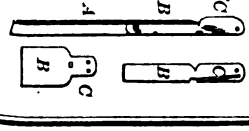

87580—F. McManus—*Wagon Axle.*

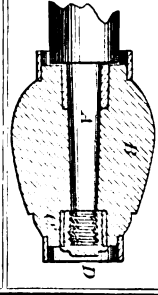

87584—H. W. Neary—*Work Bench.*

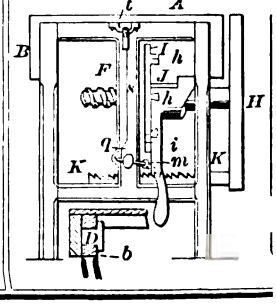

87567—H. S. Huidekoper—*For Heating Water by Steam.*

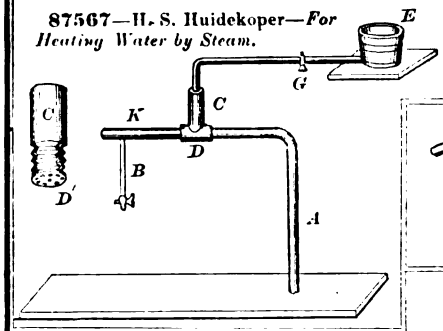

87570—P. Joyce—*Coffin Bier.*

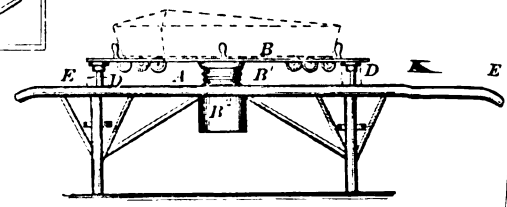

87569—G. H. Johnson—*Bracing for Cylindrical Structures.*

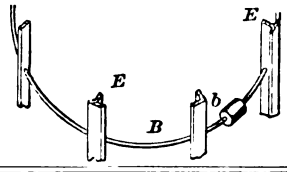

87571—H. R. Ladd—*Axle Set.*

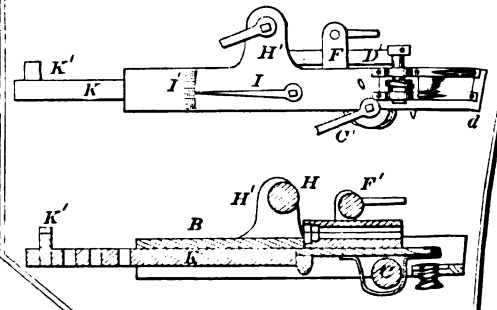

87573—J. Lusk—*For Grating Fodder.*

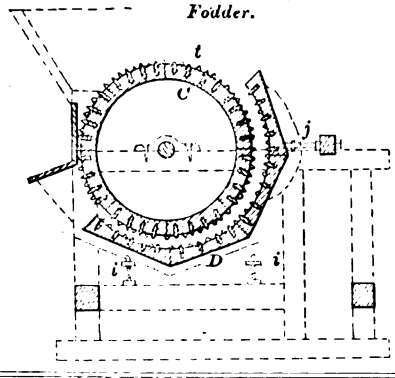

87574—A. Macqueen—*Dinner Pail.*

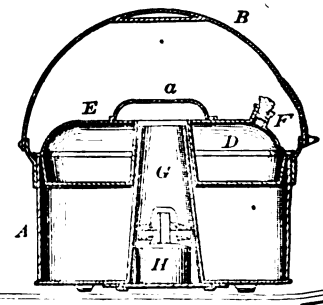

87576—F. H. Manny—*Seed Sower.*

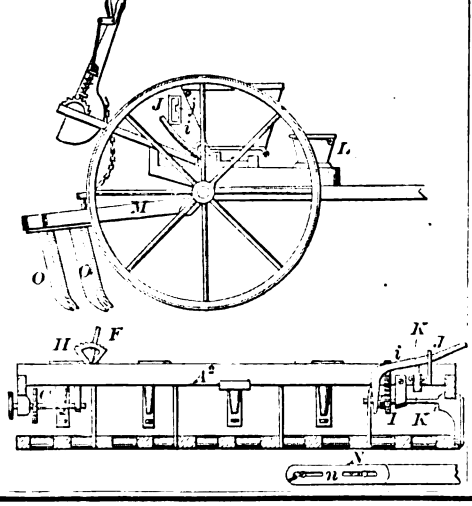

87575—E. C. Maldant—*Regulator for Gas, Steam and other Fluids.*

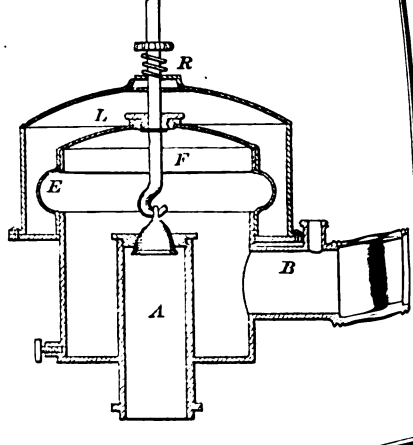

87577—N. B Marsh—*Harrow.*

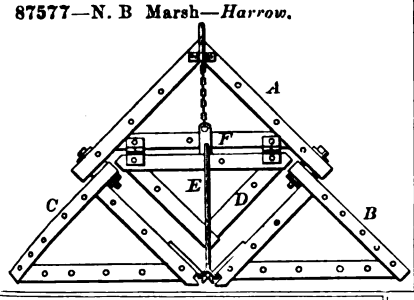

87578—H. McDonald—*Furnace.*

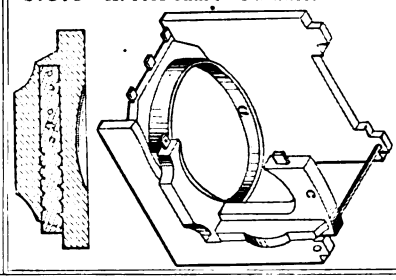

87579—W. McKeruhan—*Velocipede.*

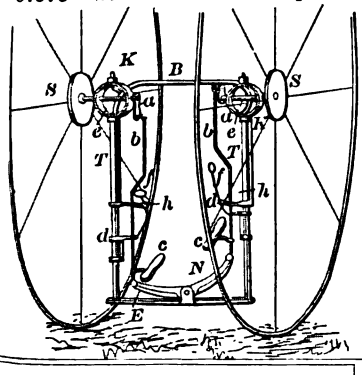

87581—N. Millington—*For Figuring Carpenters' Squares, &c.*

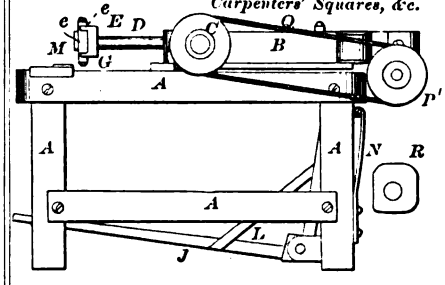

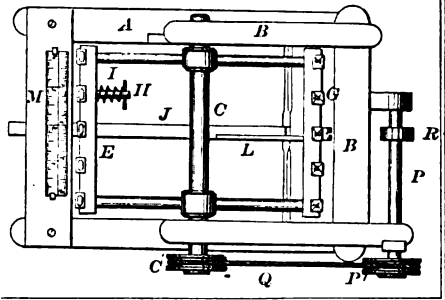

87585—J. Newlin—*Turbine Water Wheel.*

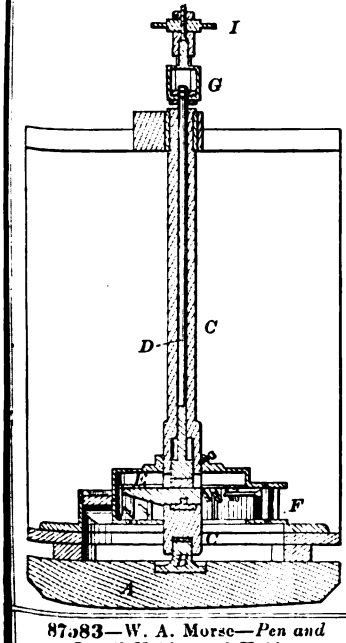

87582—H. T. Moody—*Car Coupling.*

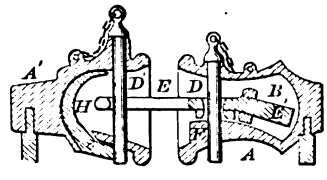

87583—W. A. Morse—*Pen and Pencil Holder and Knife.*

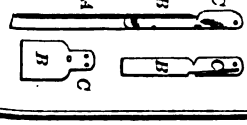

87580—E. McManus—*Wagon Axle.*

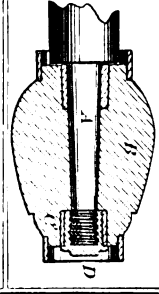

87584—H. W. Neary—*Work Bench.*

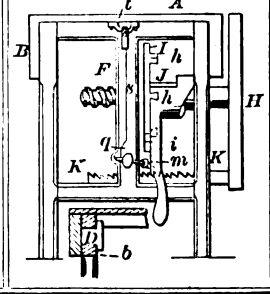

87595—D. H. Rogan—*Sewing Machine.*

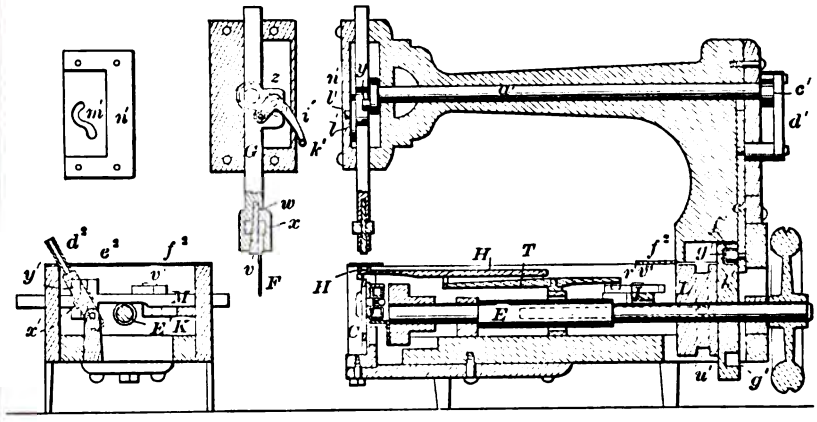

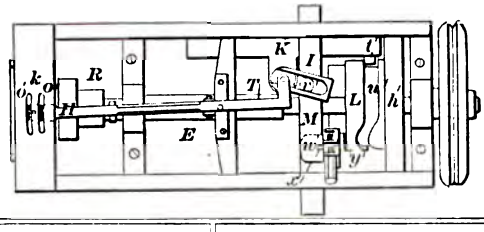

87603—G. H. Tiebaur—*Inhaler for Throat Diseases.*

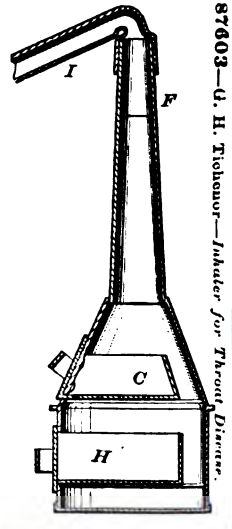

87601—A. Thirault—*Lamp Burner.*

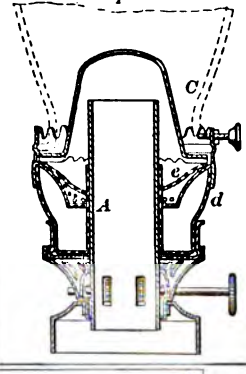

87606—J. Waite—*Harness Saddle.*

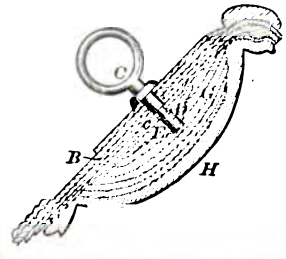

87604—W. H. Trissler—*Soldering Iron.*

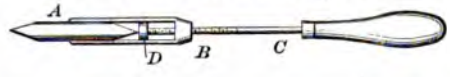

87602—E. R. Thompson—*Straw Cutter.*

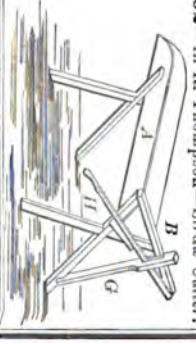

87608—J. Wells—*Paper Bag Machinery.*

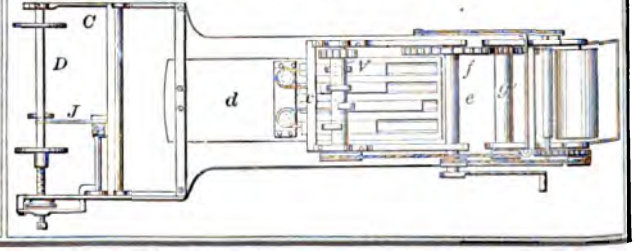

87510—F. P. Pfleghar—*Knob Latch.*

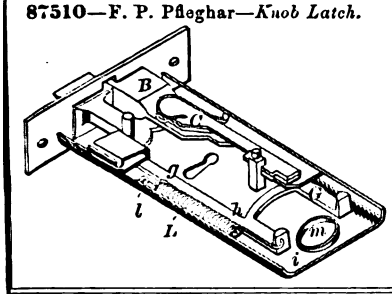

87511—J. Pons—*Lamp Extinguisher.*

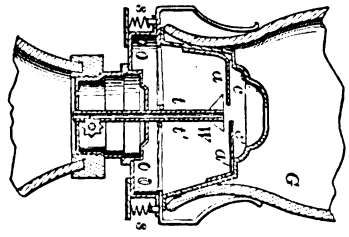

87512—G. Reynolds—*For Rolling Metals.*

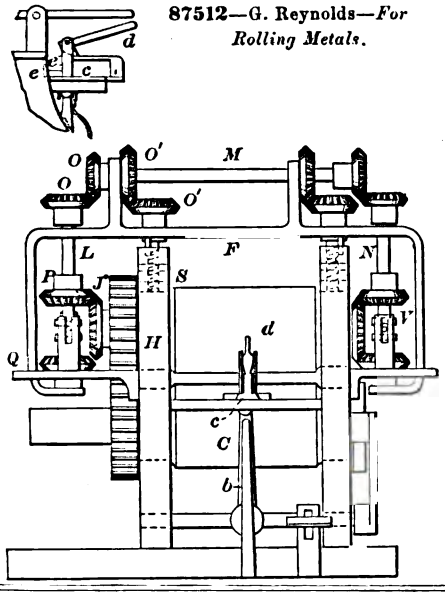

87513—I. Robbins—*Water Meter.*

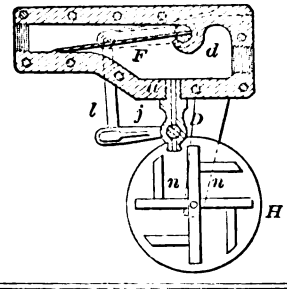

87514—I. Robbins—*Lock.*

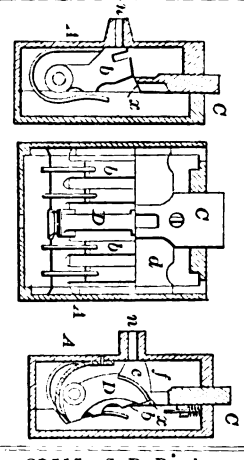

87516—T. A. Searle—*Liquid Meter.*

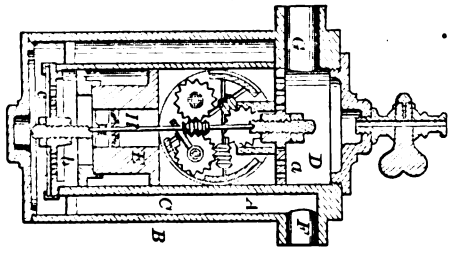

87515—S. B. Rowley—*Fastening for Fruit Jars.*

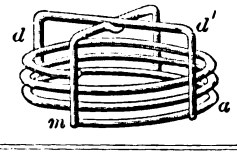

87517—J. Y. Smith—*Wooden Railway.*

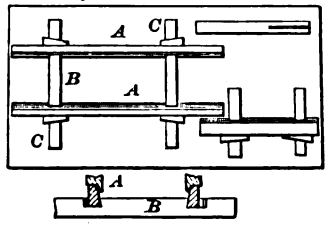

87518—F. W. Smith, Jr.—*Key.*

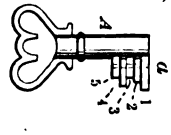

87617—Bailey & Blanchard—*Washing Machine.*

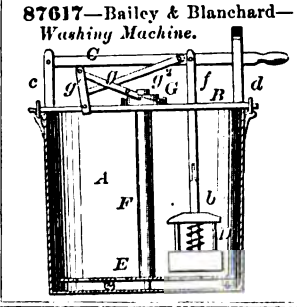

87619—S. W. Baker—*Horse Collar.*

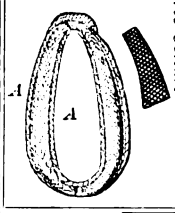

87623—V. W. Blanchard—*Pinion.*

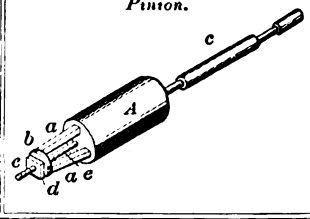

87621—E. S. Belton—*Toy.*

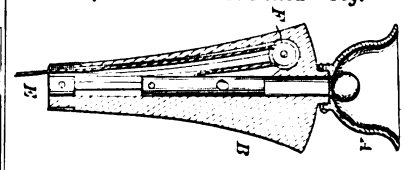

87622—B. Bevelander—*Car Coupling.*

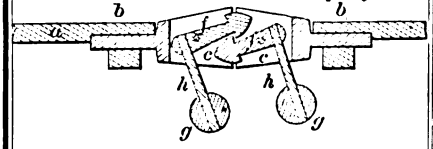

87620—E. Barton—*For Twisting Bullion Fringe.*

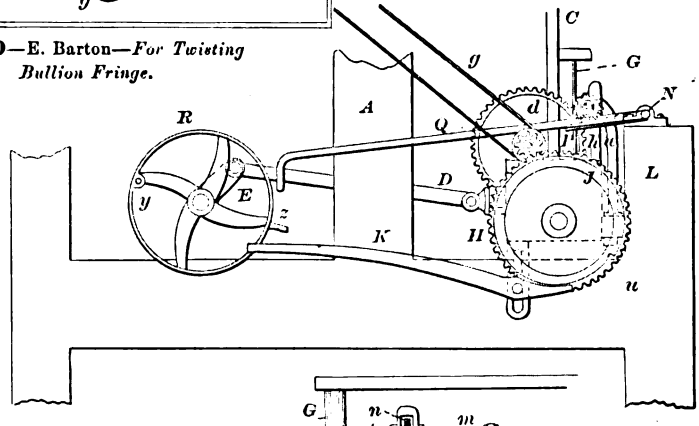

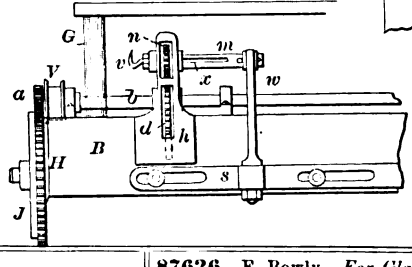

87624—D. Bly—*Artificial Leg.*

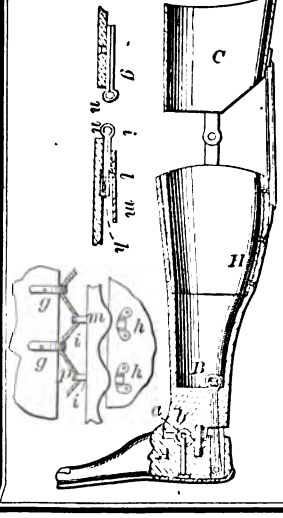

87625—J. W. Bookwalter—*Water Wheel Casing.*

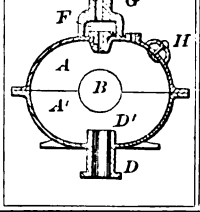

87626—F. Bowly—*For Glass Cutting*

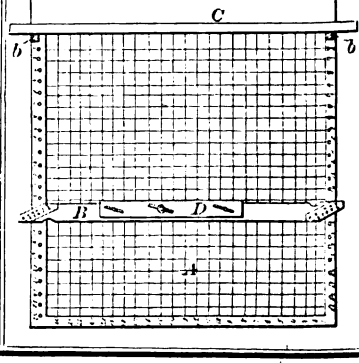

87627—H. C. Briggs—*Hoeing Machine.*

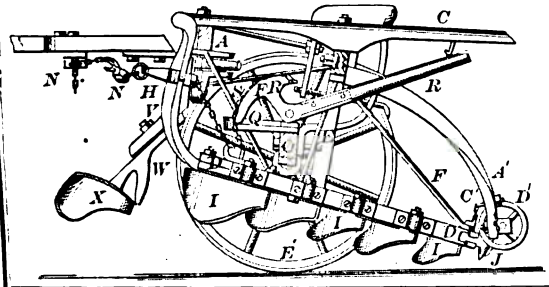

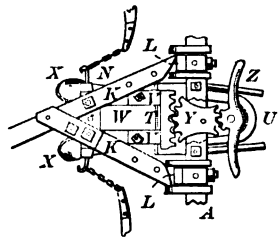

87628—A. P. Brown—*Wind Wheel.*

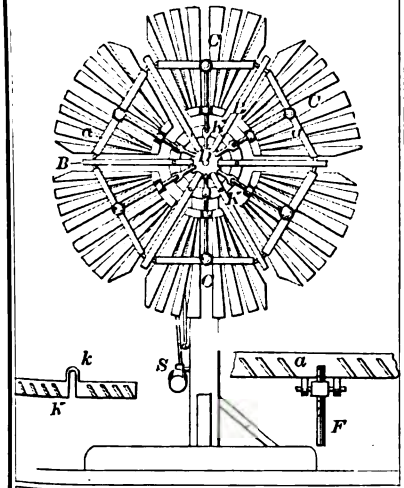

87629—G. Buchanan—*Grate Fender.*

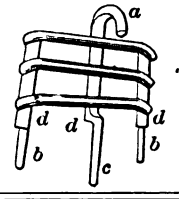

87631—J. Cantner—*Fly Net for Horses.*

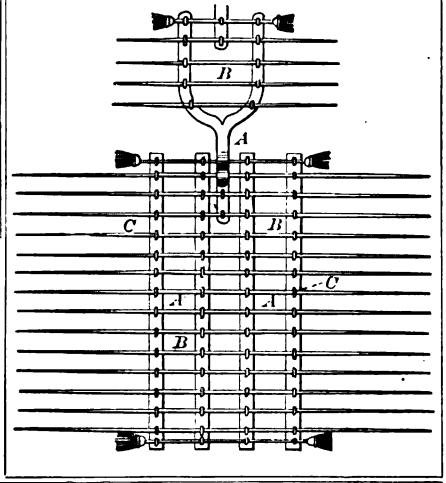

87630—J. Burns—*Velocipede.*

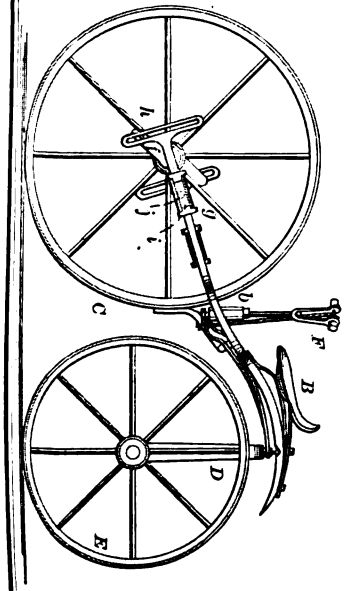

87632—J. M. Carpenter—*Cutting Threads on Pipes.*

Fig. 4

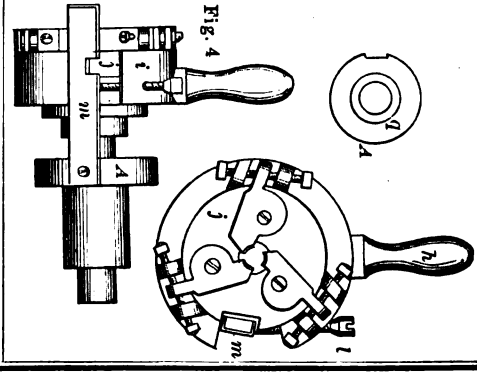

87633—W. Carpenter—*Sewing Machine Attachment.*

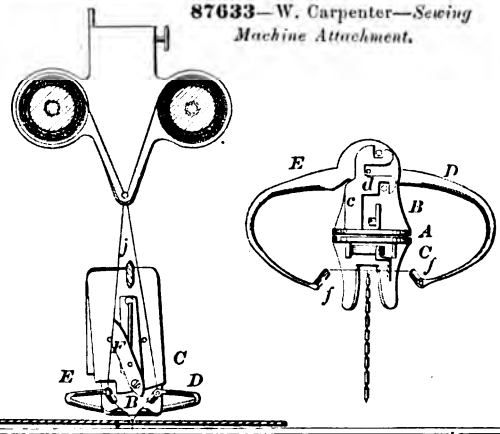

87634—G. Clark—*Grain Storehouse.*

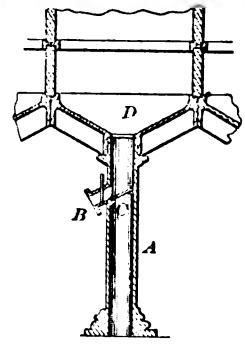

87635—R. J. Clay—*Cotton Gin.*

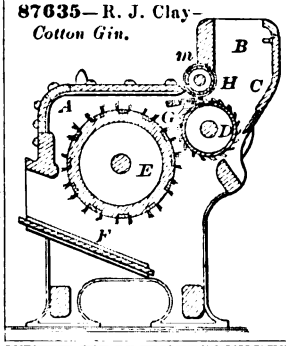

87636—F. Clymer—*Clothes Line Fastener.*

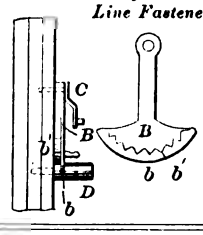

87638—C. L. Cole—*Churn Dasher.*

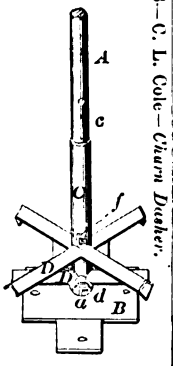

87637—J. F. Coddington—*Harvester.*

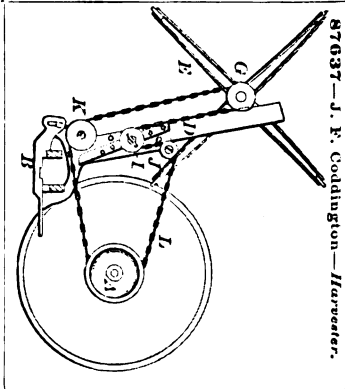

87639—E. Coleman—*Churn.*

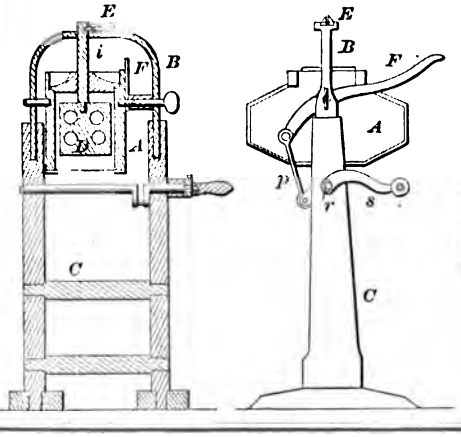

87640—A. W. Cram—*Mash Tub and Vapor Cooler.*

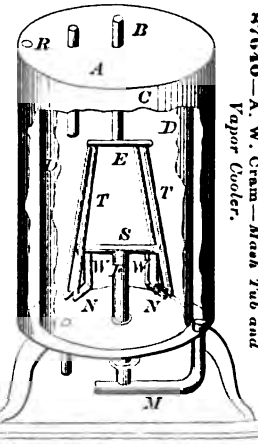

87641—H. Culver—*Plow.*

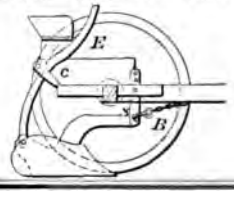

87642—H. Culver—*Harrow and Cultivator.*

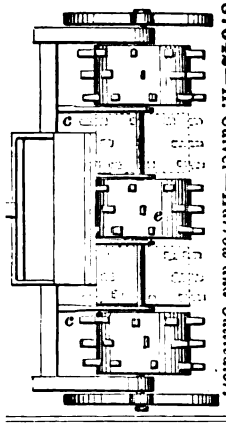

87643—J. Cummins—*Horse Hay Fork.*

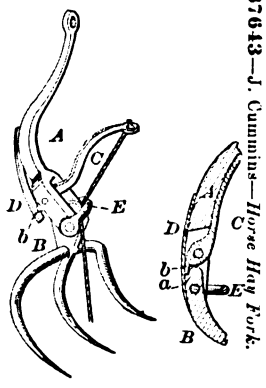

87644—L. Daft—*Chair Seat &c.*

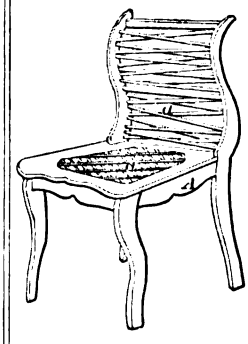

87646—G. W. Darby—*Elevator.*

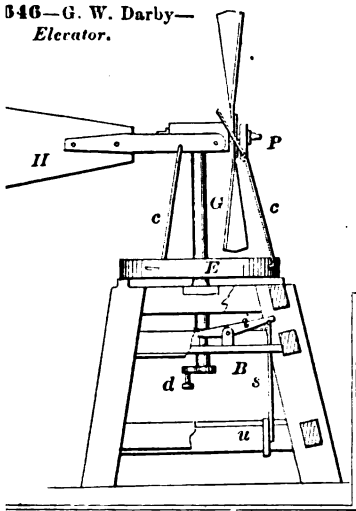

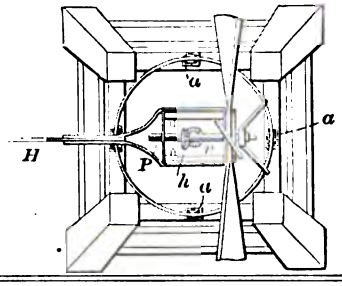

87648—Demorest & Cook—*Brace and Suspenders.*

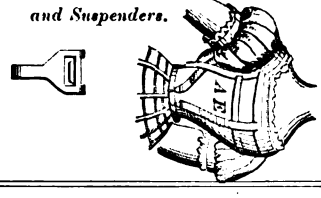

87645—W. E. Dante—*Key Hole Guard.*

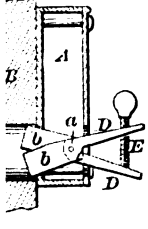

87647—W. J. Decker—*Blind and Shutter Fastening.*

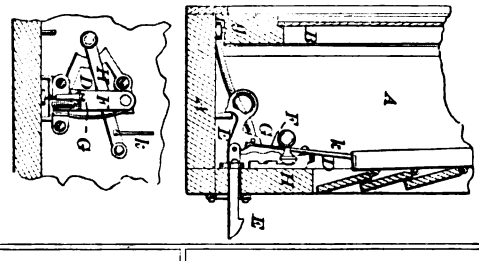

87649—L. M. Doddridge—*Car Coupling.*

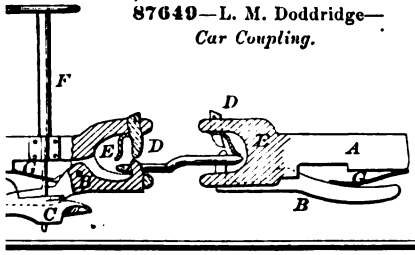

87652—M. Ehrgott—*Thimble Skein for Axles.*

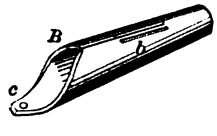

87617—Bailey & Blanchard—*Washing Machine.*

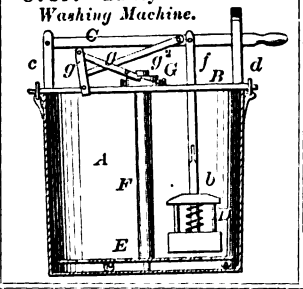

87619—S. W. Baker—*Horse Collar.*

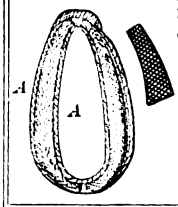

87623—V. W. Blanchard—*Pinion.*

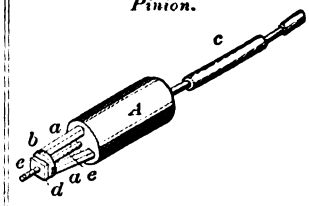

87621—E. S. Belton—*Toy.*

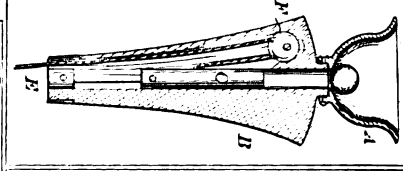

87622—B. Bevelander—*Car Coupling.*

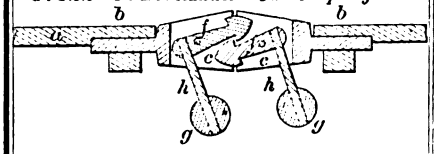

87620—E. Barton—*For Twisting Bullion Fringe.*

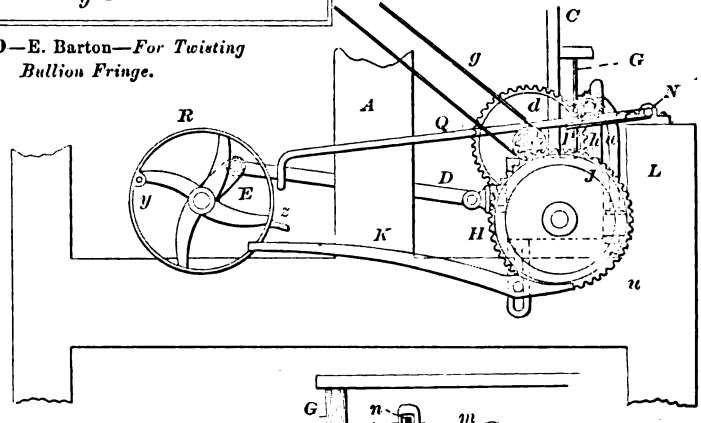

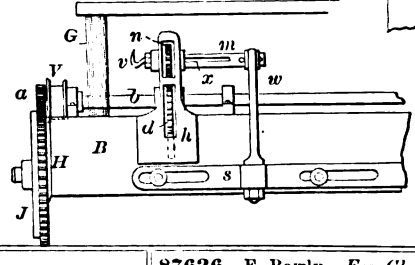

87624—D. Bly—*Artificial Leg.*

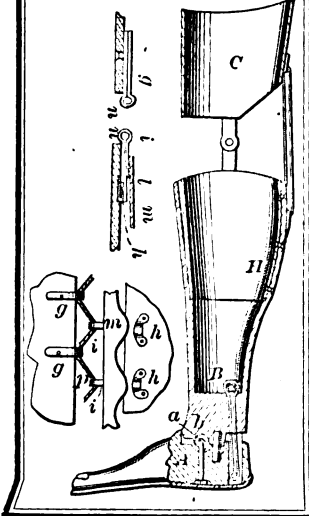

87625—J. W. Bookwalter—*Water Wheel Casing.*

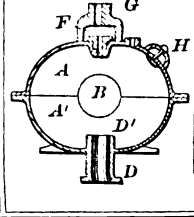

87626—F. Bowly—*For Glass Cutting*

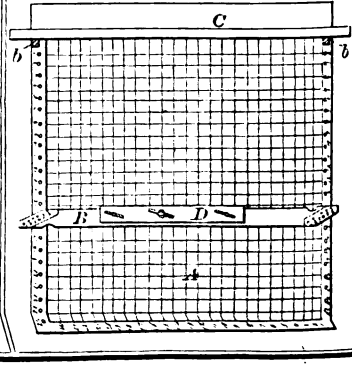

87665—W. & W. Hamilton, Jr.—*Rotary Motor and Meter.*

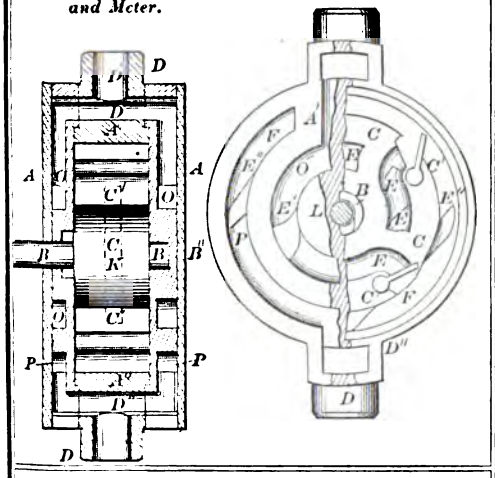

87668—O. Hayes—*Skylight and Ventilator.*

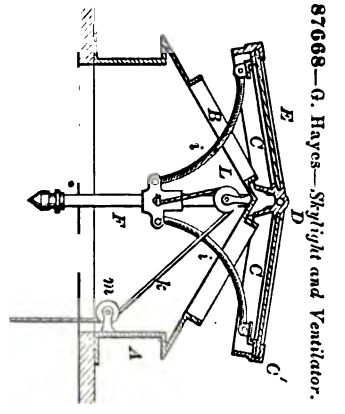

87671—H. L. Hervey—*Reflector for Lights.*

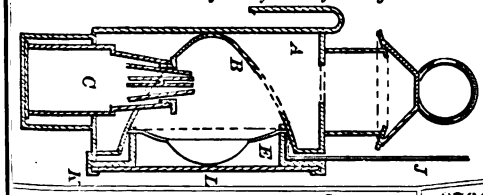

87670—P. C. Heinz—*Packing for Artesian Wells.*

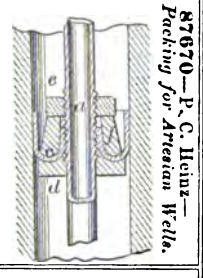

87666—H. J. Hancock—*Ladder.*

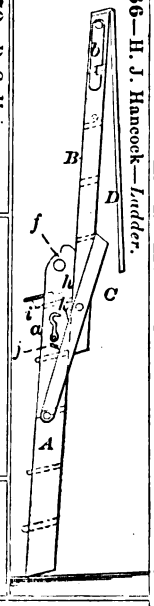

87667—Harnish & King—*Portable Mill.*

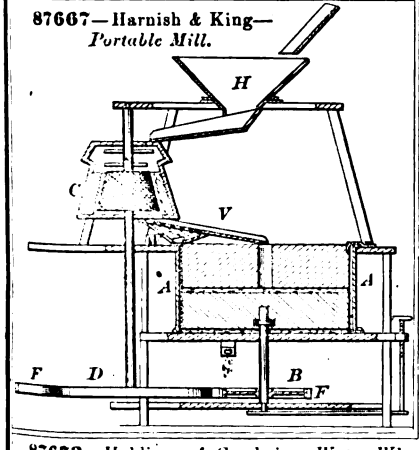

87669—A. Heartsill—*For Facing Millstones.*

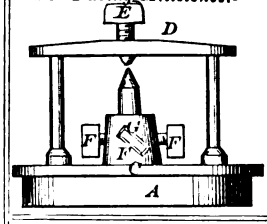

87672—Herzog & Roth—*Work in Wood.*

87673—Holdiman & Goodwin—*Water Wheel.*

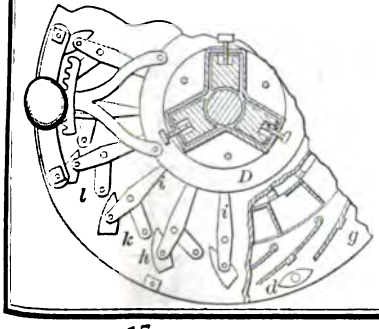

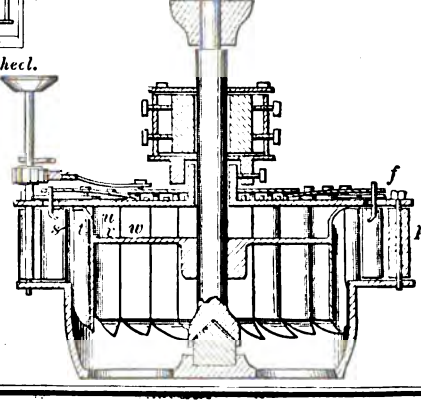

87674—Holmes & Roome—*Game Register.*

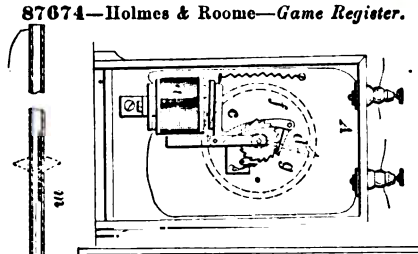

87675—C. H. Hudson—*Spring Seat.*

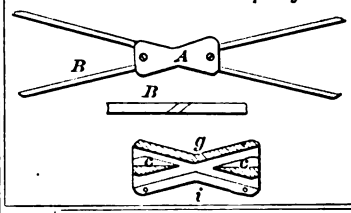

87676—H. Jackson—*Corn Stalk Cutter.*

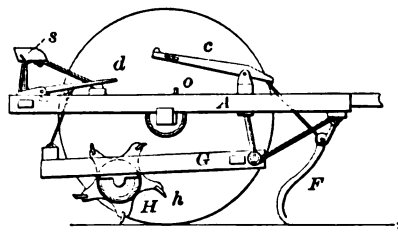

87678—J. C. Jay—*Band Tightener for Corn Shocks.*

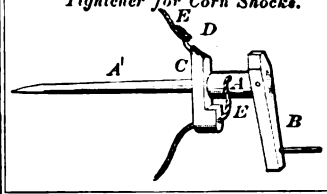

87677—J. R. Jackson—*Sulky Plow.*

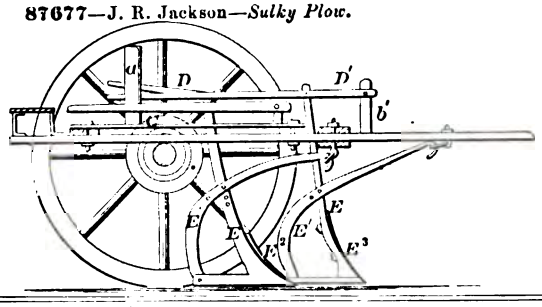

87680—J. Kidd—*Vapor Burner.*

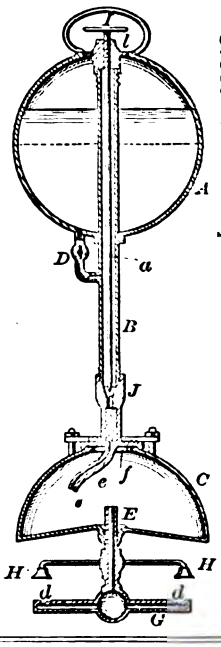

87681—J. Kidd—*For Carburetting Gas.*

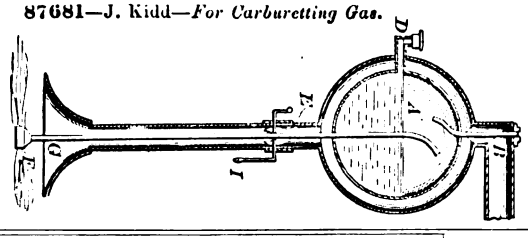

87679—G. H. Johnson—*Fireproof Granary.*

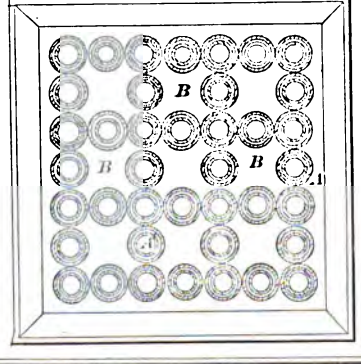

87682—J. Kidd—*For Carburetting Gas.*

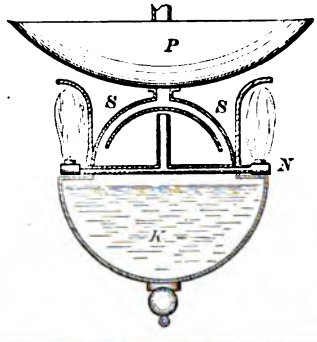

87683—D. P. Lacey—*Sash Holder.*

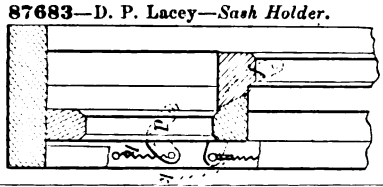

87685—T. R. Leighton—*Railway Car Door.*

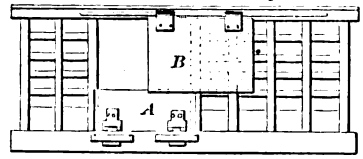

87684—C. L. Larder—*Brush Handle.*

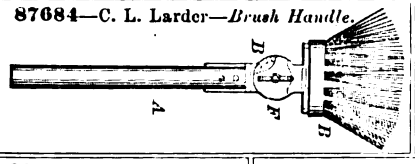

87687—E. T. Ligon—*Railway Car Axle.*

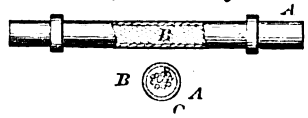

87688—Little, Clow & Nation—*Stove.*

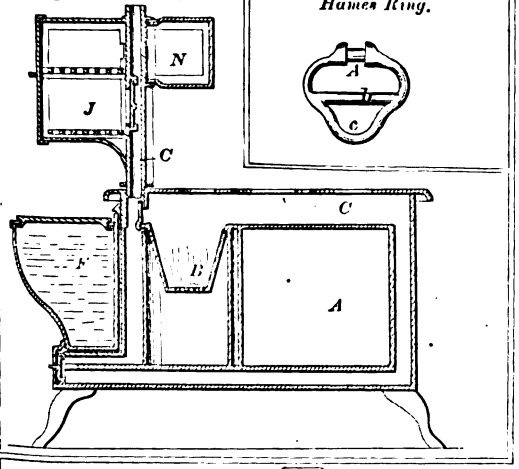

87686—J. Letchworth—*Hames Ring.*

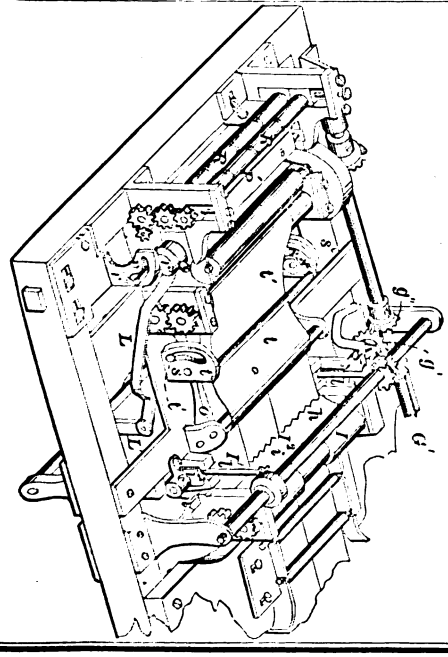

87689—H. C. Lockwood—*Paper Bag Machine.*

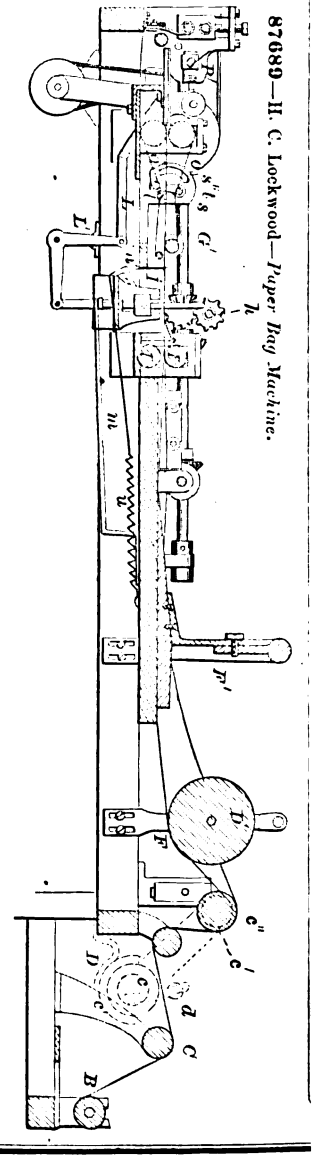

87651—J. W. Eardly—*Corn Planter.*

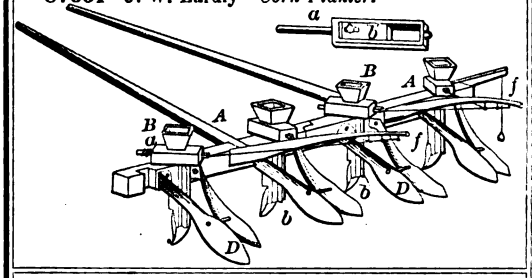

87655—P. S. Foster—*Boot and Shoe Lacing*

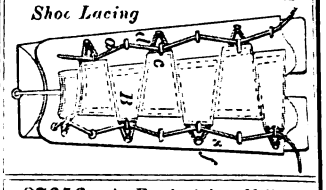

87656—A. Frederick—*Millstone Balance.*

87654—M. E. Ezell—*Fire Kindler.*

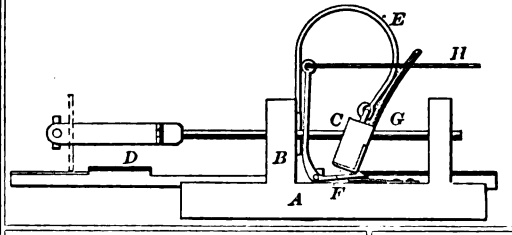

87657—A. S. Galliher—*Churn.*

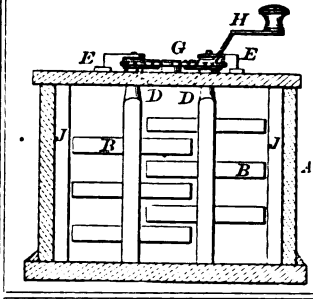

87660—J. L. Good—*Churn.*

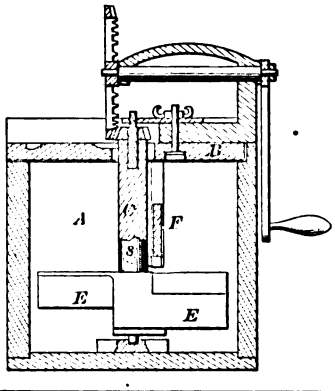

87661—H. S. Goodspeed—*Pen.*

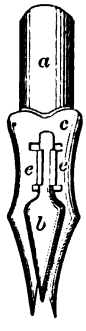

87659—J. Gattner—*Churn.*

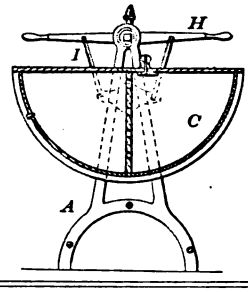

87664—A. W. Hall—*Water Meter.*

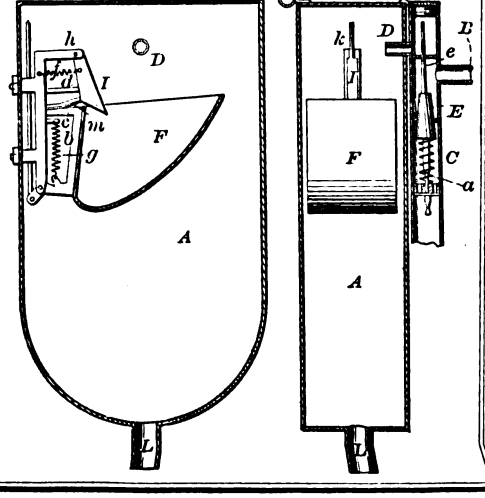

87662—W. B. Gould—*Stair Rod.*

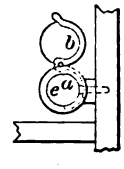

87663—W. Hainsworth—*Mould for Metallic Castings.*

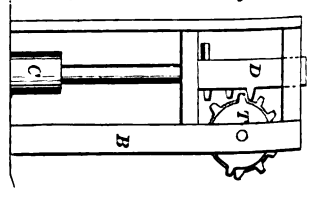

87696—J. A. Miller—*Horse Hay Fork.*

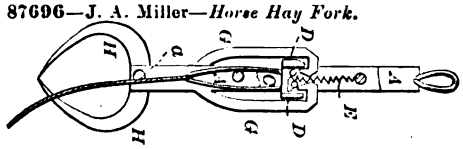

87697—J. S. Millikan—*Truck.*

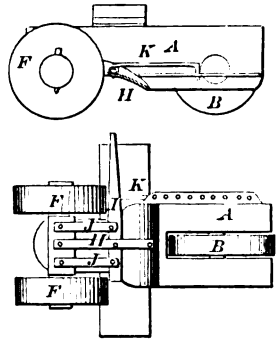

87698—Minor & M. W. & G. W. Nesmith—*Registering Apparatus for Stills.*

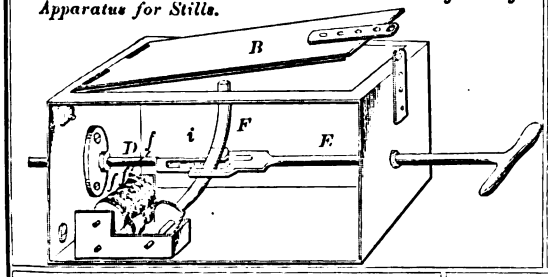

87700—A. W. Pagett—*Sawing Machine Guard.*

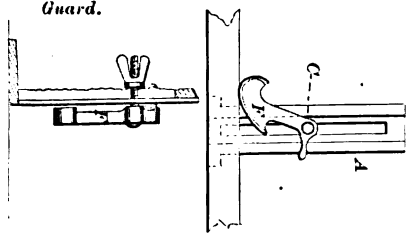

87699—Morse & Carter—*Harvester Rake.*

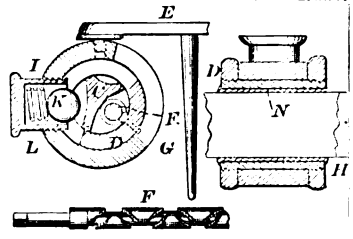

87701—C. H. G. Pease—*Marble Sawing Machine.*

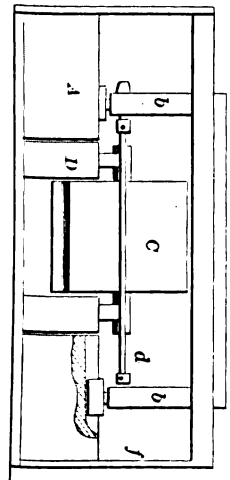

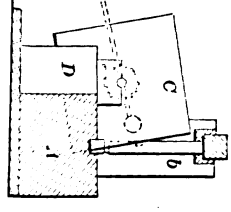

87702—J. J. Pierce—*Tuyere.*

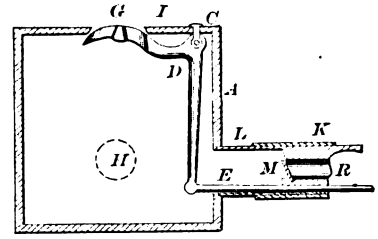

87703—J. Pons—*Mitre Box.*

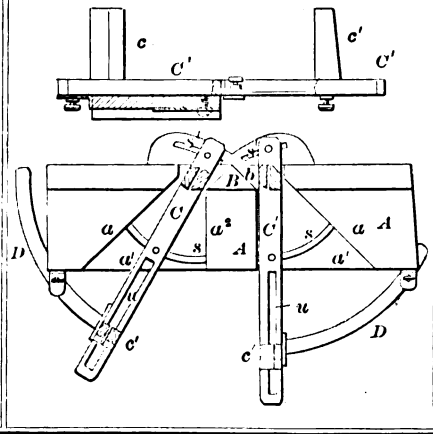

87704—Pratt & Scimel—*Soldering Machine.*

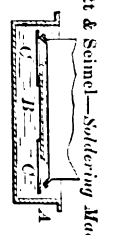

87705—A. Quinn—*Pea Picker.*

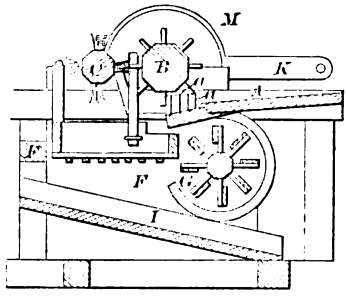

87706—B. F. Randell—*Fanning Mill.*

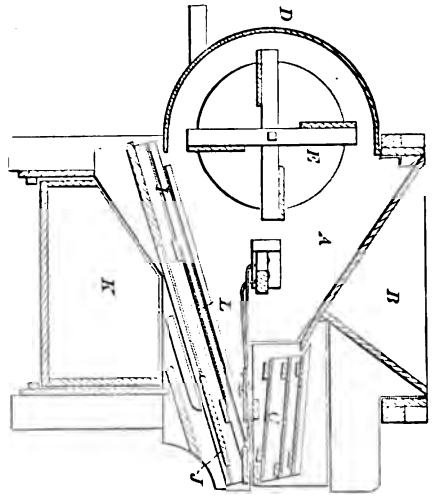

87707—G. P. Reed—*Chronometer Escapement.*

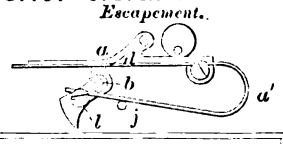

87709—A. Rollo—*Shingling Bracket.*

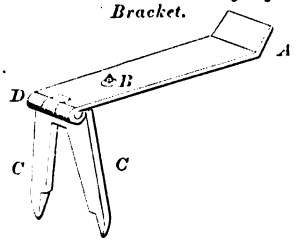

87708—A. C. Rodgers—*Sash Holder.*

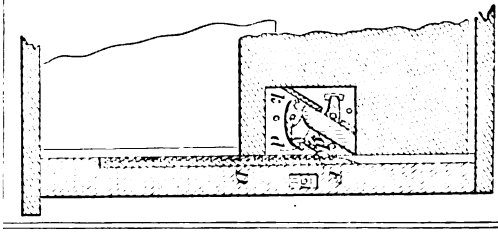

87710—E. A. G. Roulstone—*Ice Cream Receptacle.*

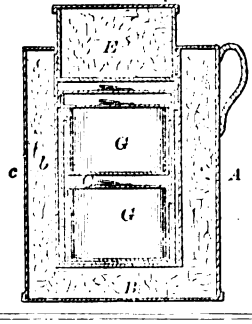

87712—Sater & Barns—*Grain Drill and Corn Dropper.*

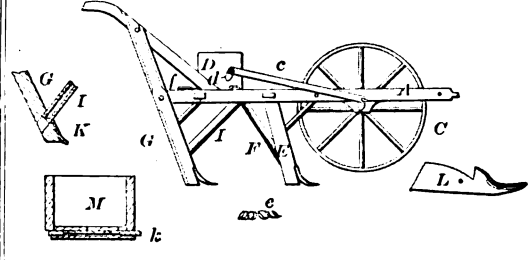

87711—W. W. Rumrill—*Road Scraper.*

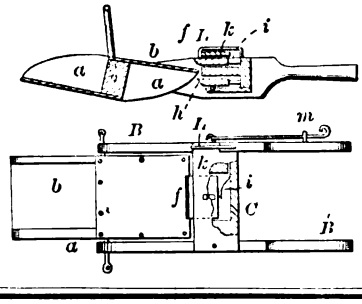

87714—E. E. Shepardson—*Key Hole Guard.*

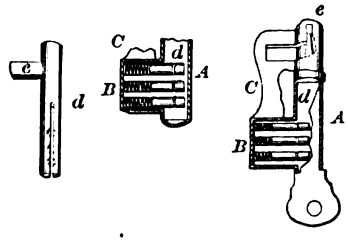

87713—L. W. Serrell—*Velocipede.*

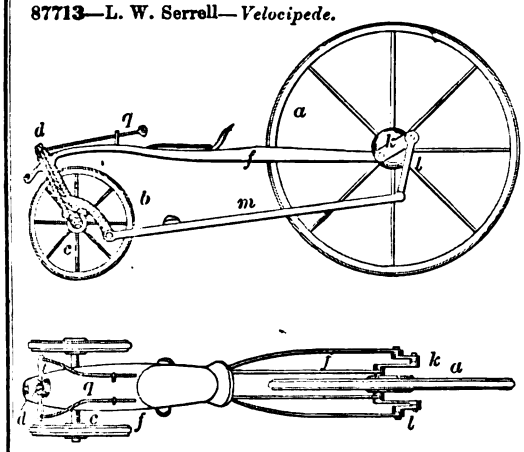

87720—L. Stark—*Branding Iron.*

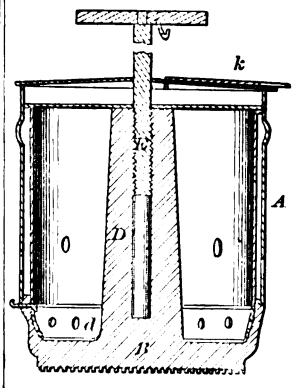

87715—W. H. Sible—*Bit Stock.*

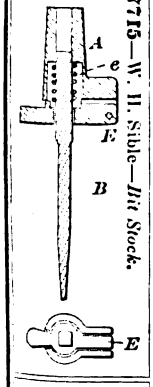

87716—F. H. Smith—*Clay Pulverizer and Stone Separator.*

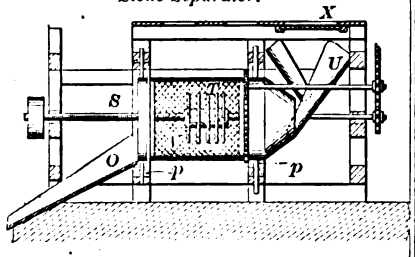

87719—J. Stark—*Pruning Hook.*

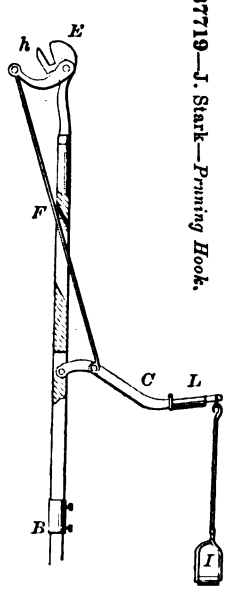

87718—S. Skinner—*Pea Rake.*

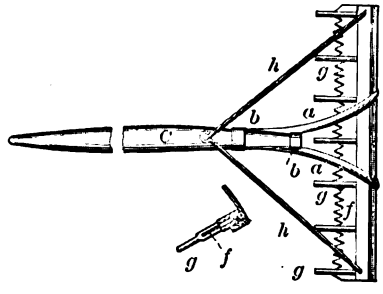

87717—J. B. Smith—*Screw Bolt and Lock Nut.*

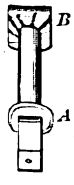

87721—A. J. Stephens—*Cultivator.*

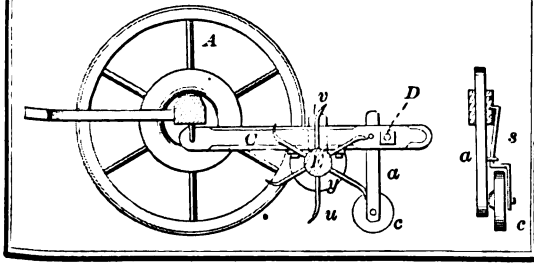

87722—H. P. Stewart—*Shank.*

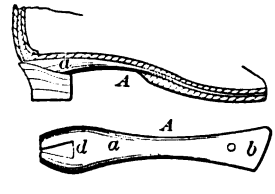

87723—D. U. Stoner—*Printing Press.*

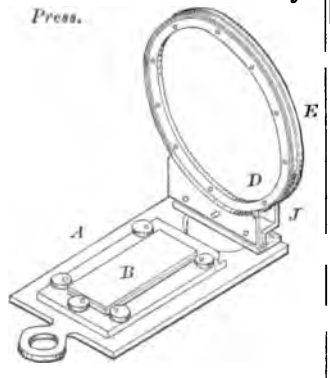

87724—D. C. Stover—*Cultivator.*

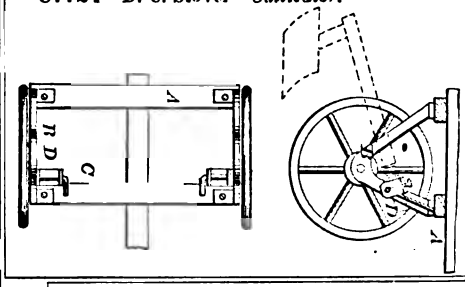

87725—C. H. Swain—*For Smelting Ores.*

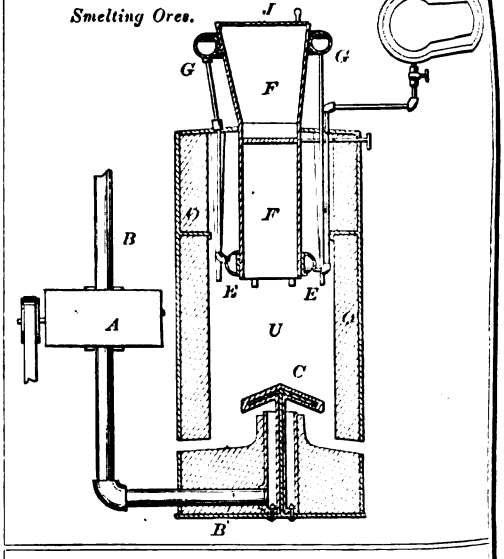

87726—H. R. Swank—*Seed Sower.*

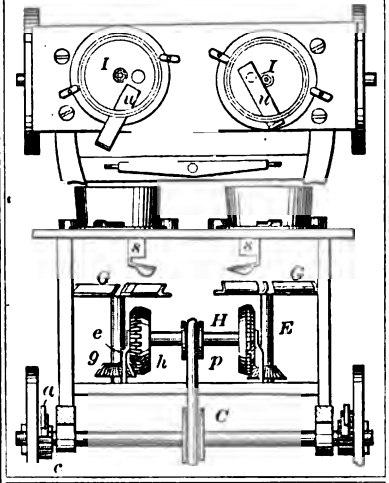

87728—L. Taws—*Valve for Blowing Engines.*

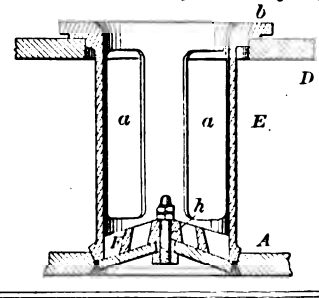

87729—J. B. Tedrow—*Fence.*

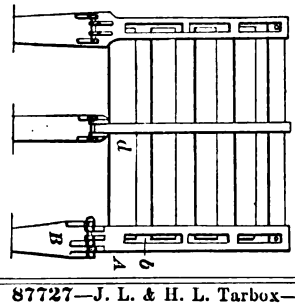

87727—J. L. & H. L. Tarbox—*Stencil Plate.*

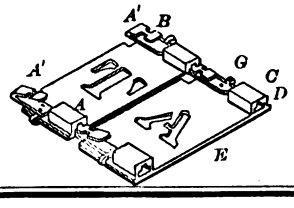

87730—N. Thompson—*Preserve Jar.*

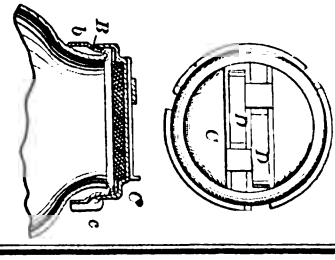

-H. B. Tibbits—*Washing Machine.*

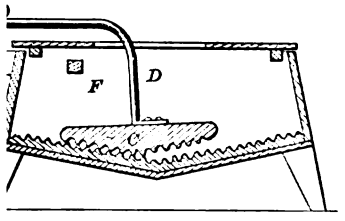

87732—H. Unger—*Bottle Corking Apparatus.*

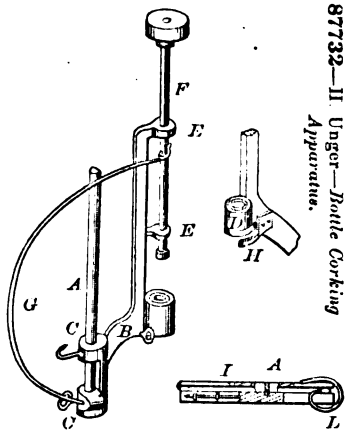

87736—A. Ward—*For Scraping and Loading Earth.*

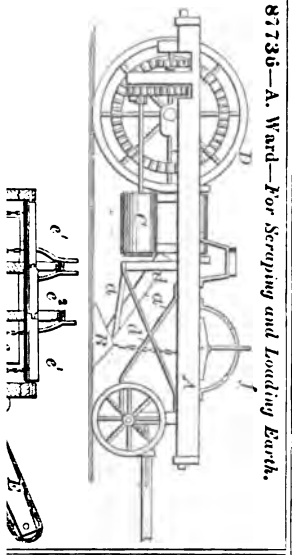

87739—W. Wells—*Hinge Pintle.*

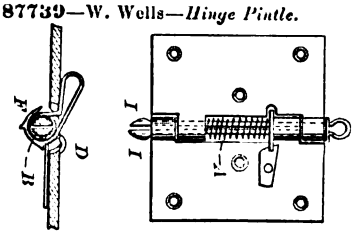

87737—S. Ward—*Back Band Hook.*

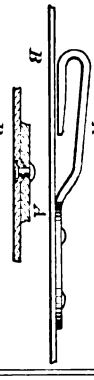

87740—F. A. Werdmüller—*Fishing Net.*

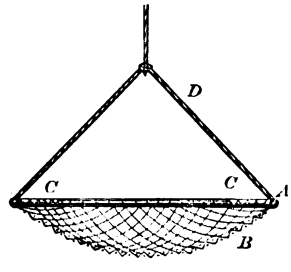

H. K. Whitner—*Bedstead.*

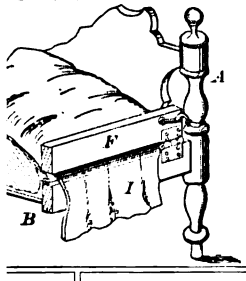

87735—J. R. Van Vechten—*Cartridge.* A

87738—Welch & Ammeden—*Wheel.* A

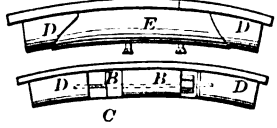

87741—T. B. White—*Bridge.*

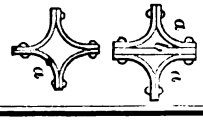

87743—M. Witmer—*Churn.*

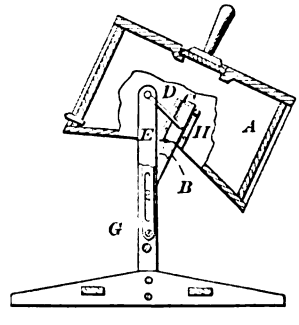

87723—D. U. Stoner—*Printing Press.*

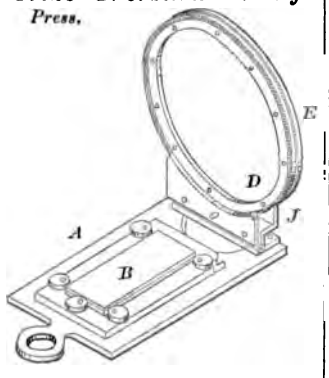

87724—D. C. Stover—*Cultivator.*

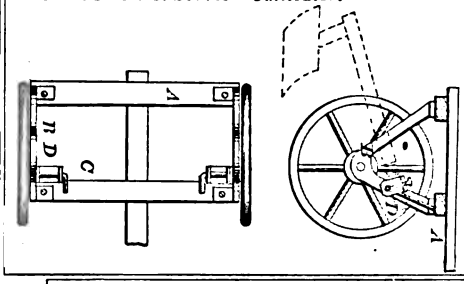

87725—C. H. Swain—*For Smelting Ores.*

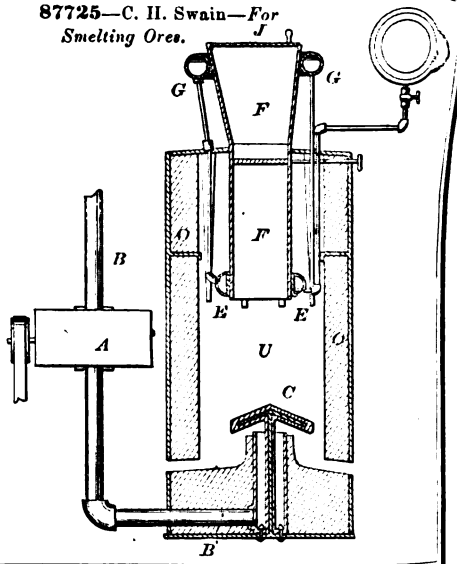

87726—H. R. Swank—*Seed Sower.*

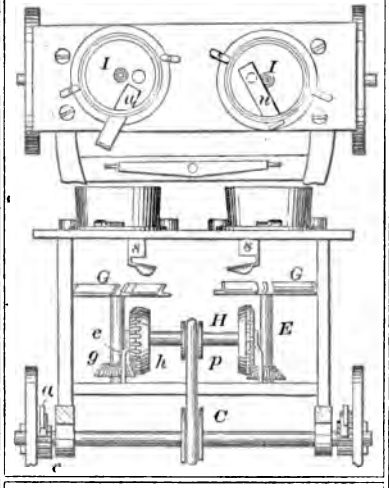

87728—L. Taws—*Valve for Blowing Engines.*

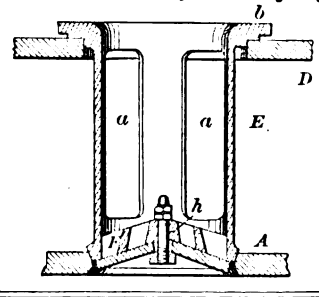

87729—J. B. Tedrow—*Fence.*

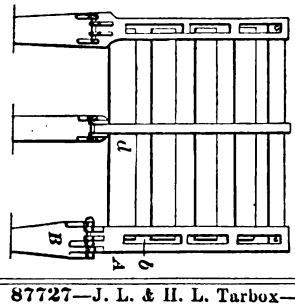

87730—N. Thompson—*Preserve Jar.*

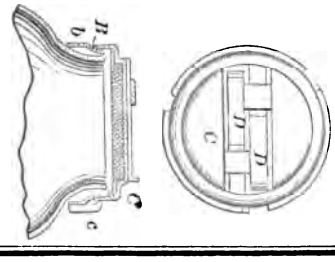

87727—J. L. & H. L. Tarbox—*Stencil Plate.*

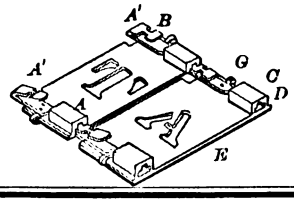

—E. S. Bennett—*Implement.*

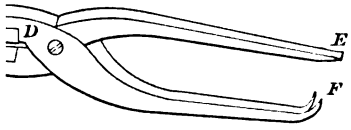

87755—J. W. Bishop—*For Harness.*

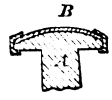

87756—J. M. Gain—*Hat Holder for Seats.*

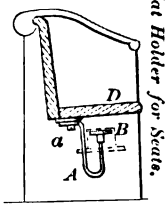

87757—H. N. Chapman—*Curtain Fixture.*

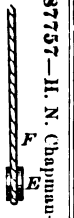

87760—J. A. Cook—*Barrel Head.*

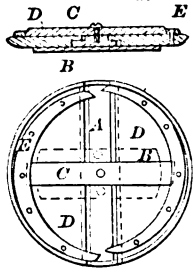

87763—R. Eickemeyer—*Felting Machine.*

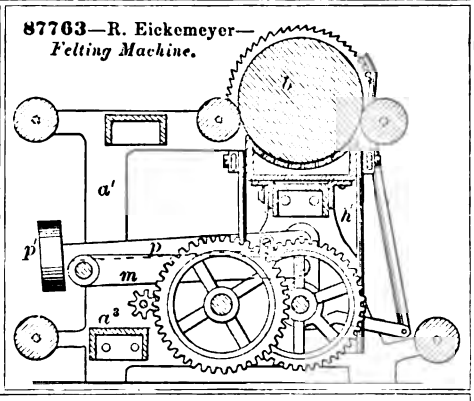

—J. R. Cribbs—*t Lock.*

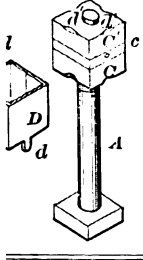

87764—R. Eickemeyer—*For Preparing and Felting Tufted Fabrics.*

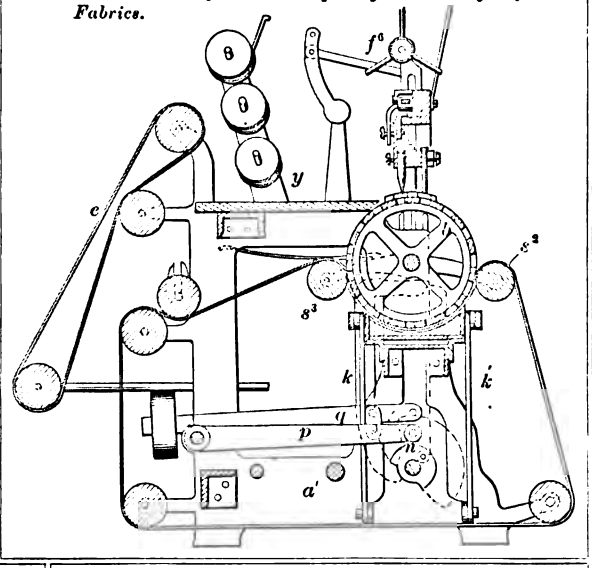

—H. G. Davis—*Machine Treadle.*

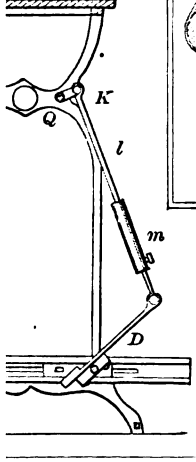

87765—S. F. Estell—*Watch.*

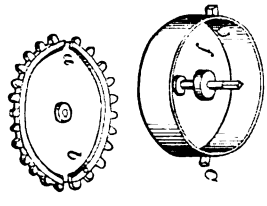

87744—F. Wolfram—*For Pressing Hats.*

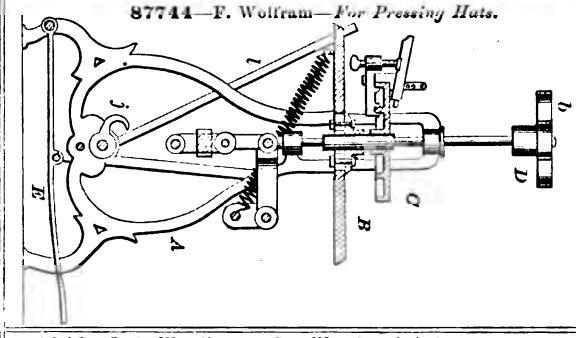

87745—H. J. Wolters—*Funnel.*

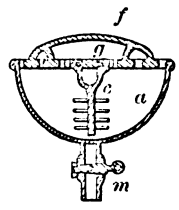

87746—J. A. Woodbury—*Car Wheel and Axle.*

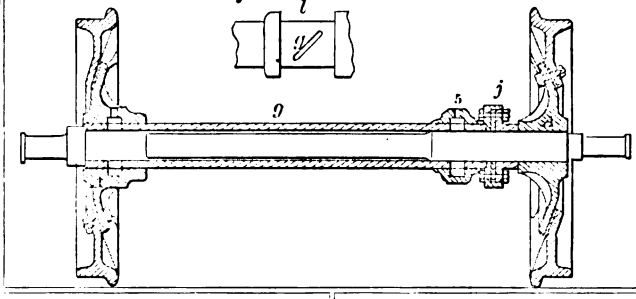

87749—A. B. Zollner—*Stirrup Strap Loop.*

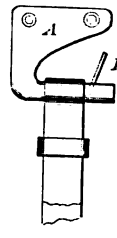

87747—J. M. Woods—*For Heading Bolts.*

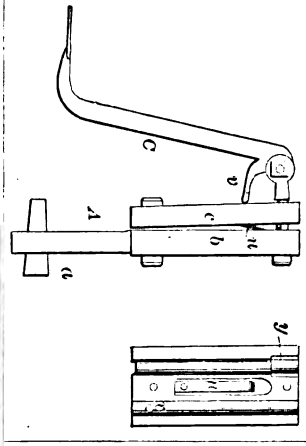

87748—L. Wray—*Triturating and Amalgamating Apparatus.*

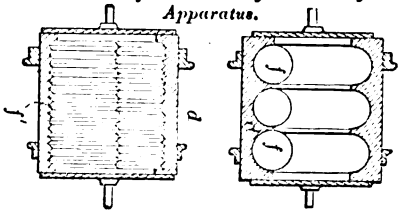

87750—Agnew & Wright—*Ore Crusher. S*

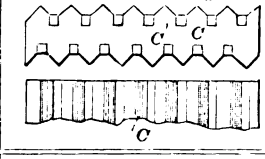

87751—C. O. Boehelder—*Chock for Vessels.*

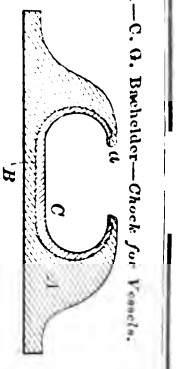

87752—J. J. Baxter—*Bed Bottom.*

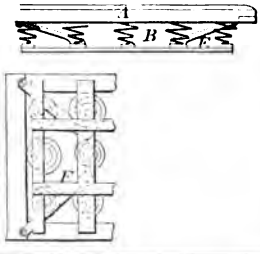

87753—J. H. Bean—*Heel Cutter.*

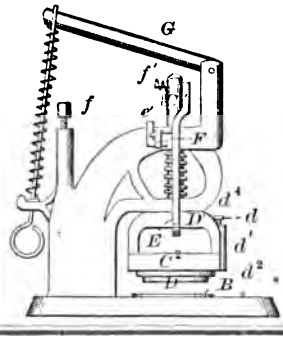

87754—E. S. Bennett—*Implement.*

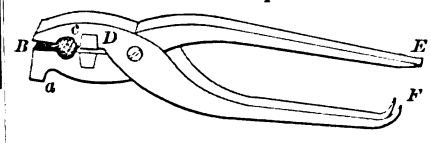

87755—J. W. Bishop—*For Harness.*

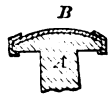

87756—J. M. Gain—*Hat Holder for Seats.*

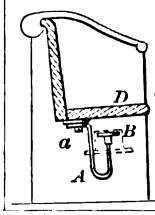

87757—H. N. Chapman—*Curtain Fixture.*

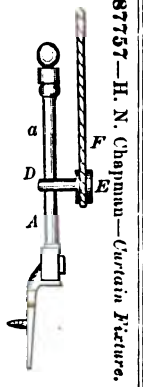

87760—J. A. Cook—*Barrel Head.*

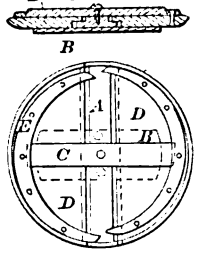

87763—R. Eickemeyer—*Felting Machine.*

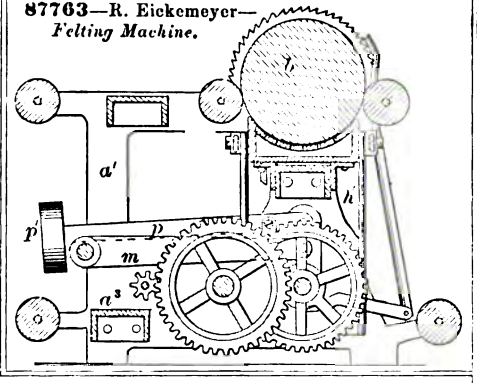

87761—J. R. Cribbs—*Nut Lock.*

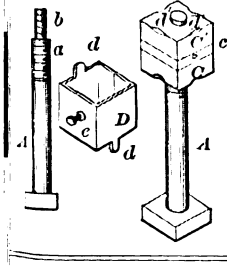

87764—R. Eickemeyer—*For Preparing and Felting Tufted Fabrics.*

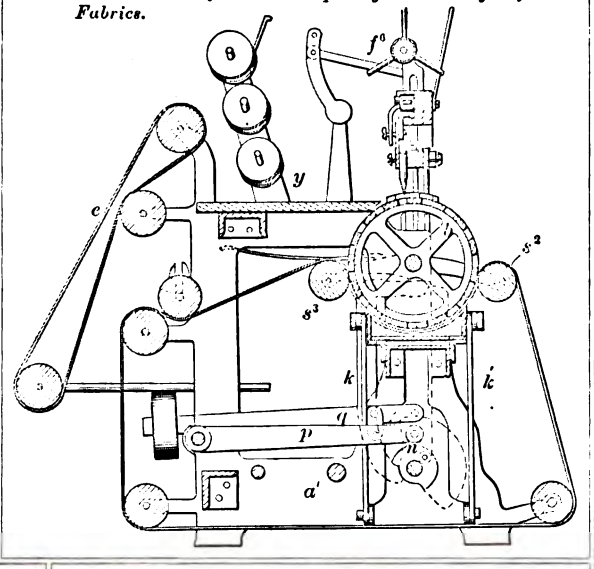

87762—H. G. Davis—*Sewing Machine Treadle.*

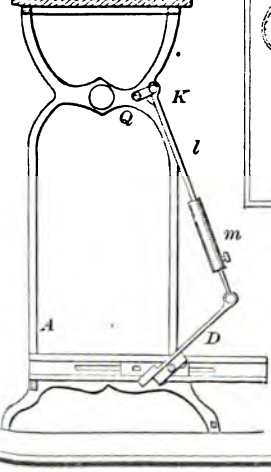

87765—S. F. Estell—*Watch.*

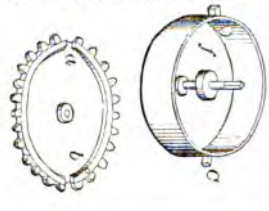

87766—C. Evotte—*Gear Cutter.*

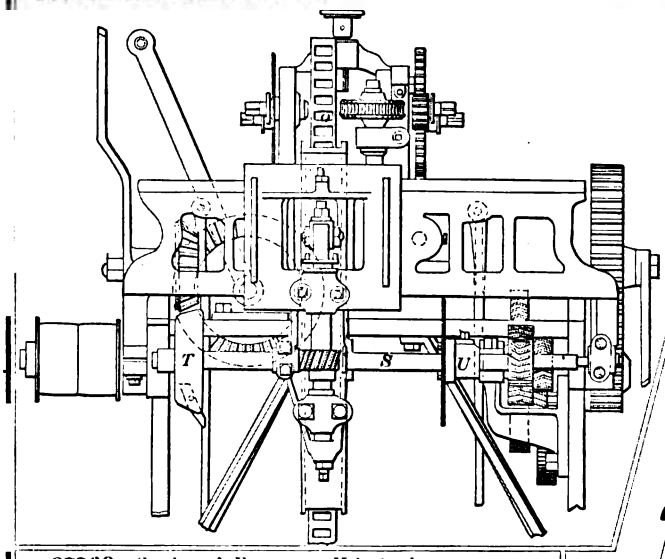

87767—R. H. Fisher—*Handle for Table Cutlery.* c

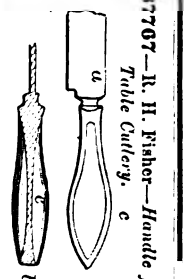

87768—R. Fitts Jr.—*Chair.*

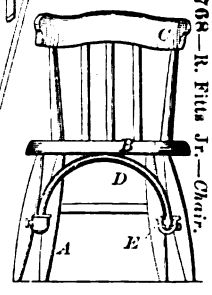

87769—Gardner & Frageser—*Velocipede.*

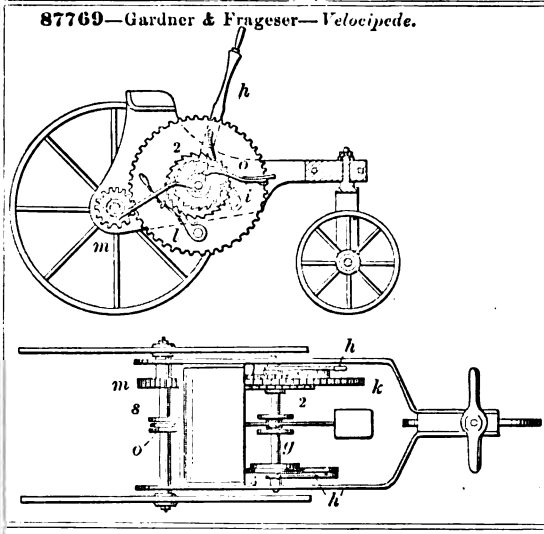

87771—S. Z. Hall—*Cotton Gin.*

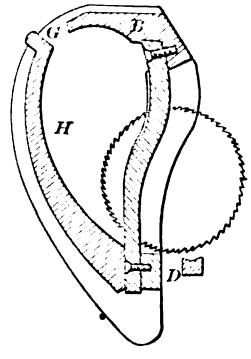

87770—C. P. Gronberg—*Harvester.*

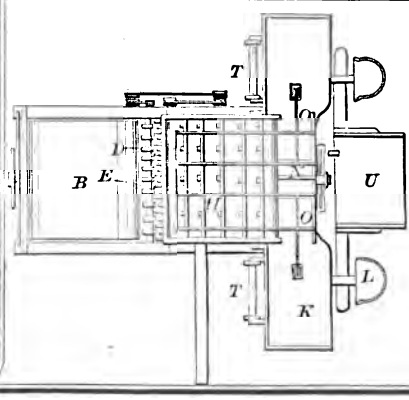

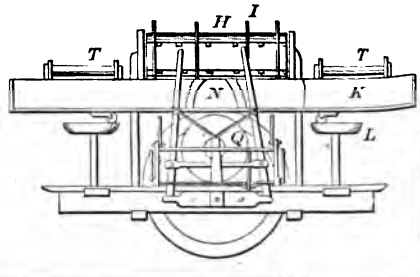

87772—J. G. Hamilton—*Steam Generator.*

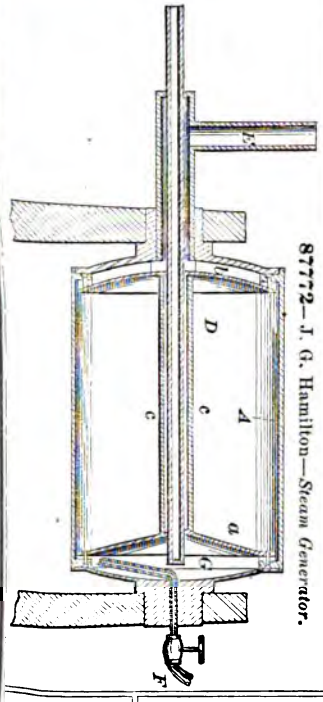

87773—F. Henderson—*Shank Laster.*

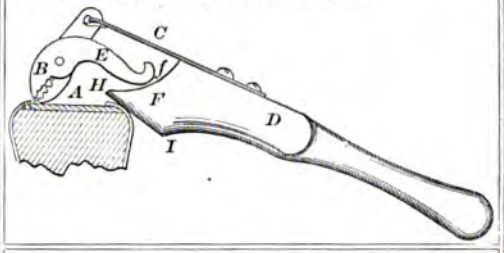

87774—H. W. Howet—*Wrench.*

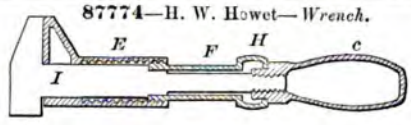

87776—M. W. House—*Mucilage Brush.*

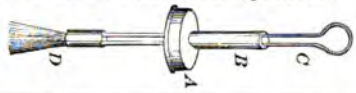

87778—H. T. Hunt—*Pump Rod Coupling.*

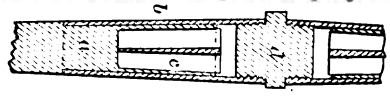

87775—L. L. Himes—*Well Tube.*

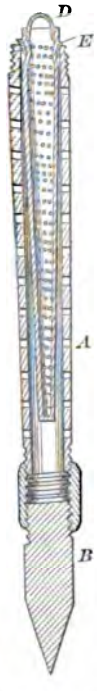

87779—Joy & Campbell—*Preparing and Bleaching Paper Pulp.*

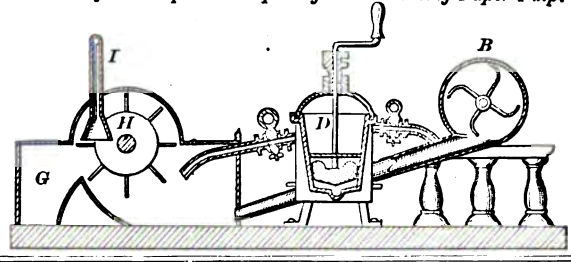

87777—M. C. Hubbard—*Lubricator.*

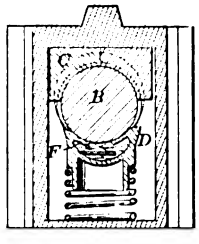

87780—J. Kaylor—*Bolt Heading Die.*

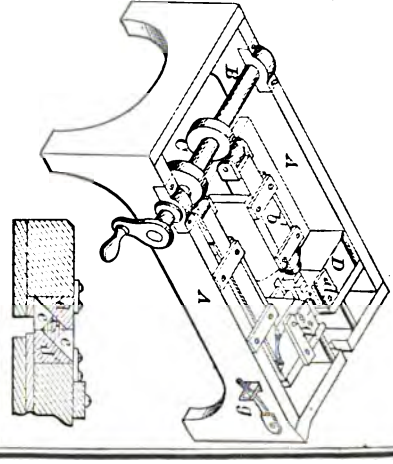

87803—C. W. Strout—*For Varnishing Oil Cloths.*

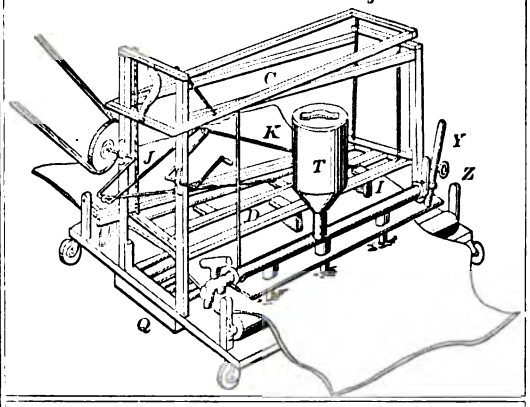

87804—J. F. Tapley—*Photographic Album.*

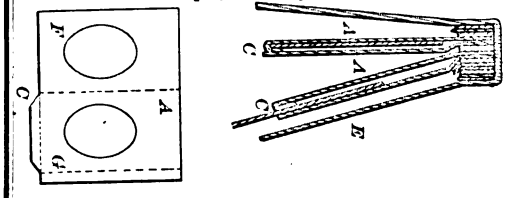

87805—R. C. Totten—*For Casting Rolls.*

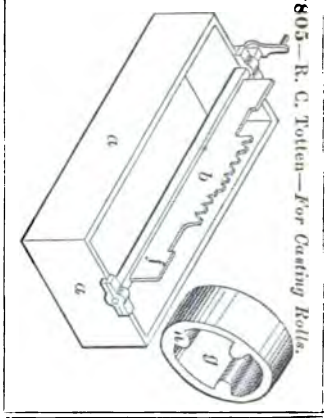

87806—J. H. Waite—*Fulling Mill.*

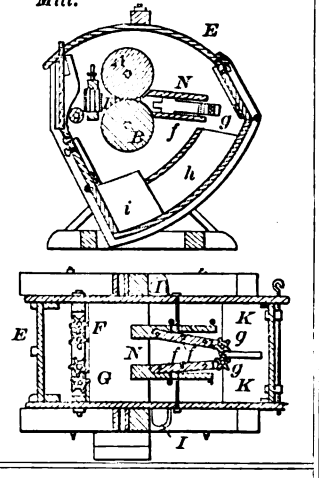

87808—Watson & Pugh—*Stove Pipe Shelf.*

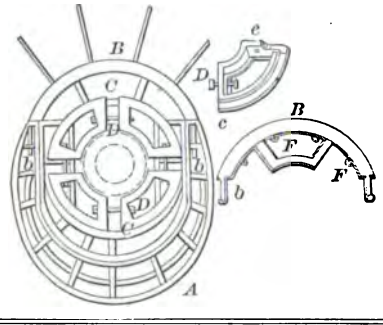

87807—C. E. Warner—*Horse Hay Fork.*

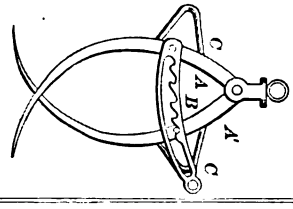

87809—W. Westlake—*Coffee and Tea Pot Handle.*

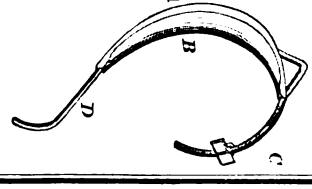

87810—G. Wheelock—*Thread Guard for Spools.*

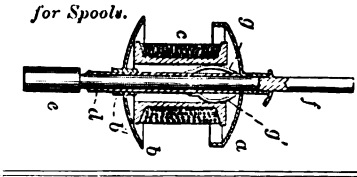

87812—D. Wingenroth—*Manure Drag.*

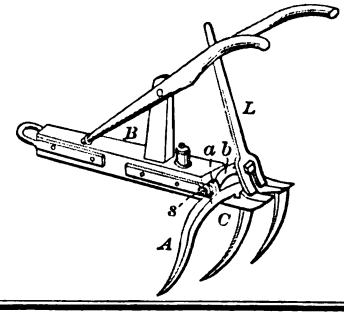

87811—Whiterow & Detrick—*Corn Sheller.*

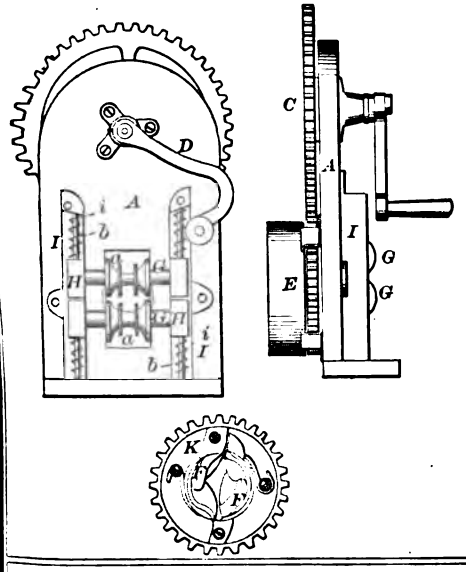

87813—T. Wosser—*Steam Engine Valve Gear.*

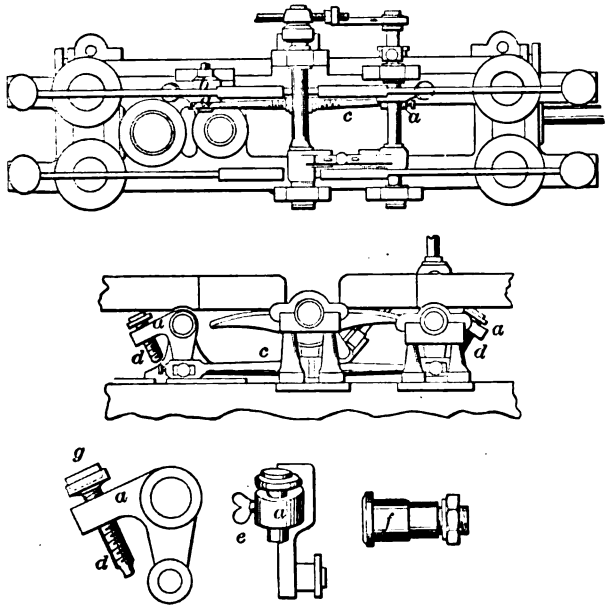

87814—G. T. Abbey—*Fire Arm.*

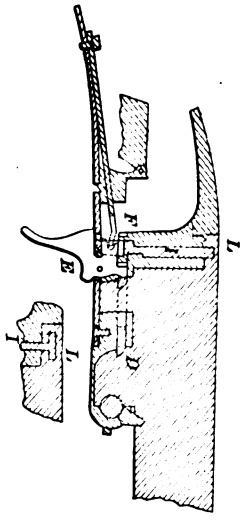

87815—L. Adams—*For Attaching Carriage Hubs to Axles.*

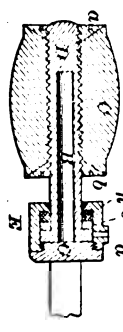

87816—A. S. Alden—*Bit Stock.*

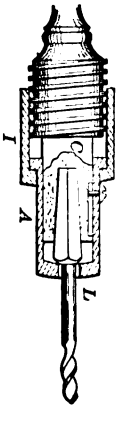

87818—J. Armstrong—*Car Axle.*

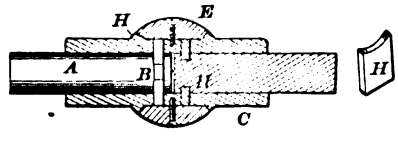

87803—C. W. Strout—*For Varnishing Oil Cloths.*

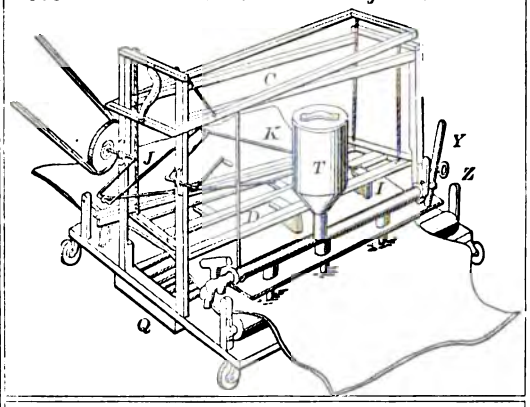

87804—J. F. Tapley—*Photographic Album.*

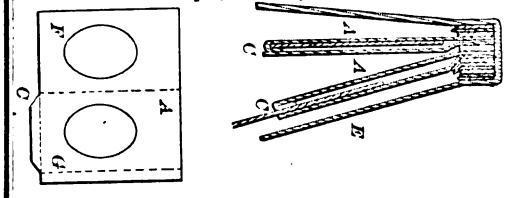

87805—R. C. Totten—*For Casting Rolls.*

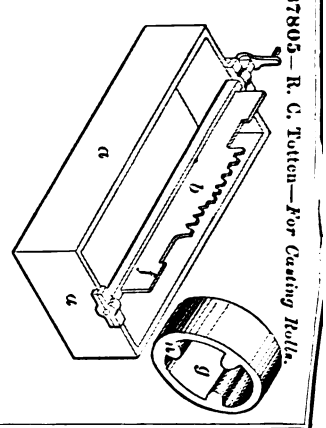

87806—J. H. Waite—*Fulling Mill.*

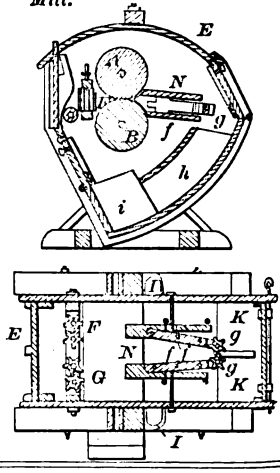

87808—Watson & Pugh—*Stove Pipe Shelf.*

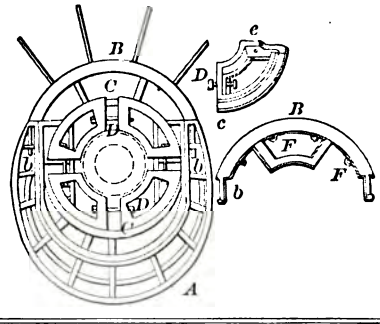

87807—C. E. Warner—*Horse Hay Fork.*

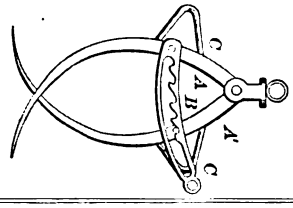

87809—W. Westlake—*Coffee and Tea Pot Handle.*

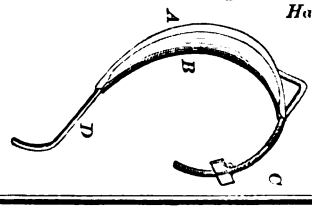

87810—G. Wheelock—*Thread Guard for Spools.*

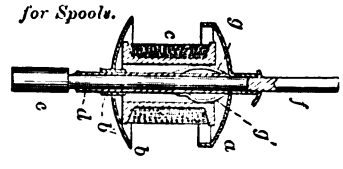

87812—D. Wingenroth—*Manure Drag.*

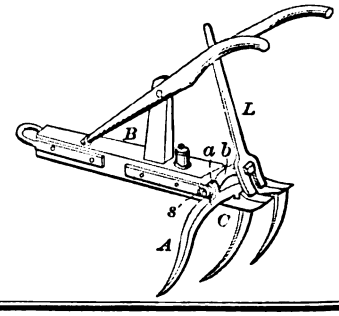

1—Whiterow & Detrick—*Corn Sheller.*

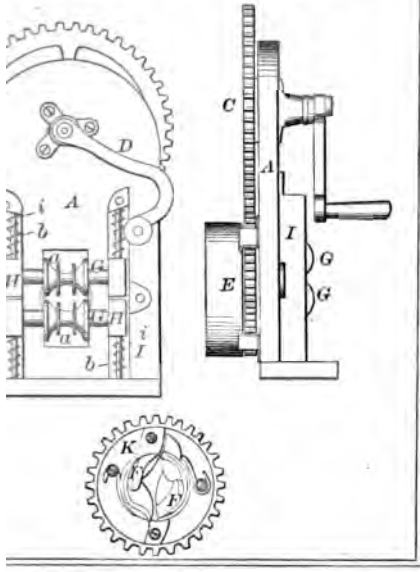

87814—G. T. Abbey—*Fire Arm.*

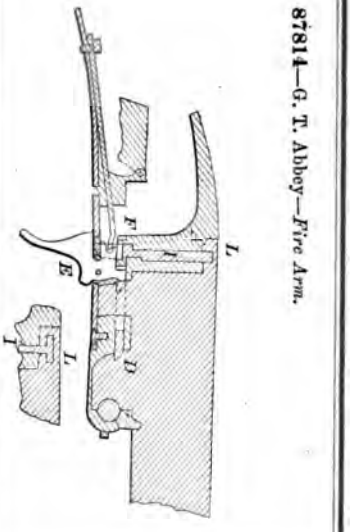

3—T. Wosser—*Steam Engine Valve Gear.*

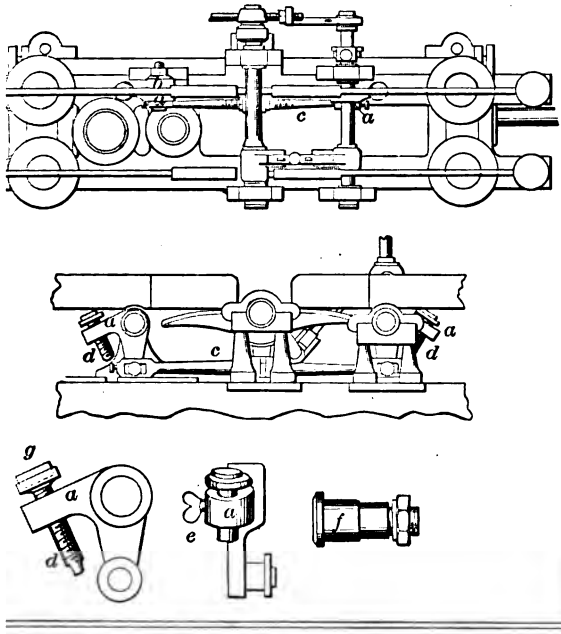

87815—L. Adams—*For Attaching Carriage Hubs to Axles.*

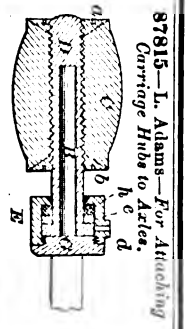

87816—A. S. Alden—*Bit Stock.*

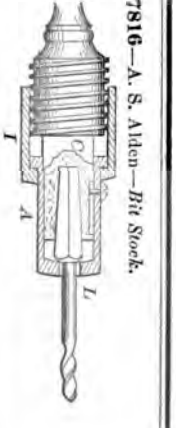

18—J. Armstrong—*Car Axle.*

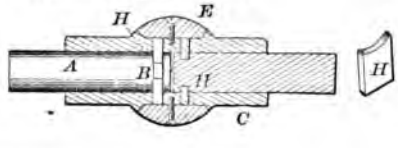

87817—E. Ames—*Harvester Rake.*

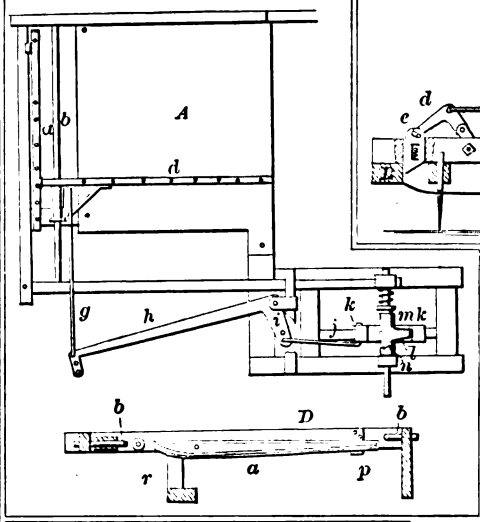

87819—A. H. Ballagh—*Harrow.*

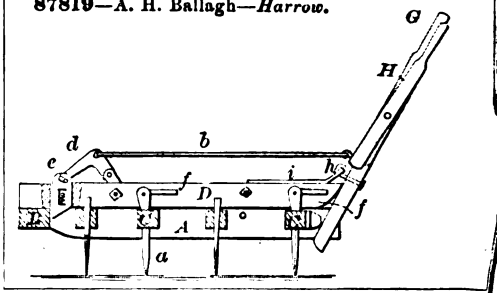

87824—W. F. & G. Coulter & Lanery—*Cultivator.*

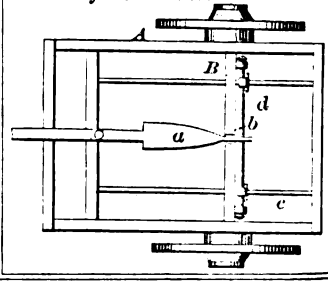

87822—J. F. Cameron—*Skate Sharpener.*

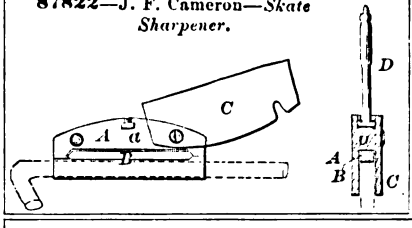

87823—J. Coney—*Carriage Wheel.*

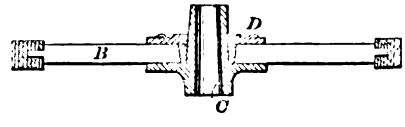

87825—W. H. Cox—*Corn Planter.*

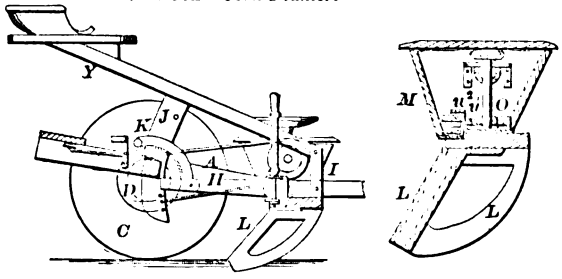

87828—L. H. Davis—*Pump.*

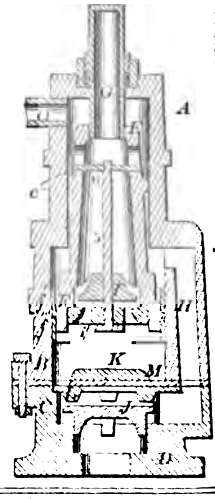

87829—J. Dourson—*Table.*

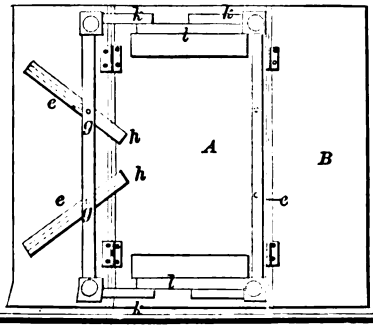

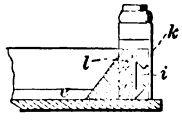

87827—M. R. Daud—*Spring.*

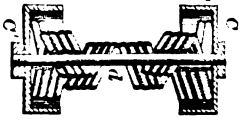

87826—C. O. Crosby—*For Polishing Needles.*

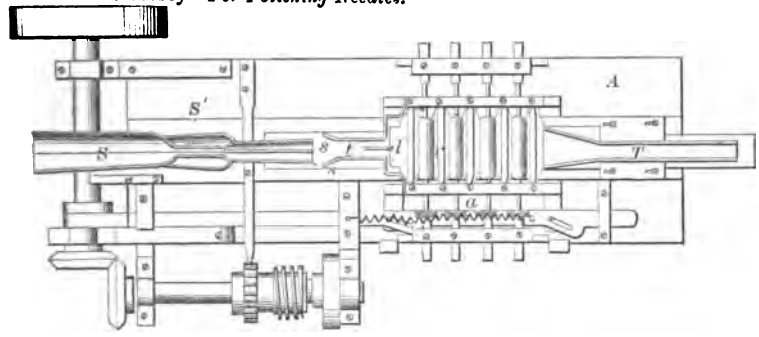

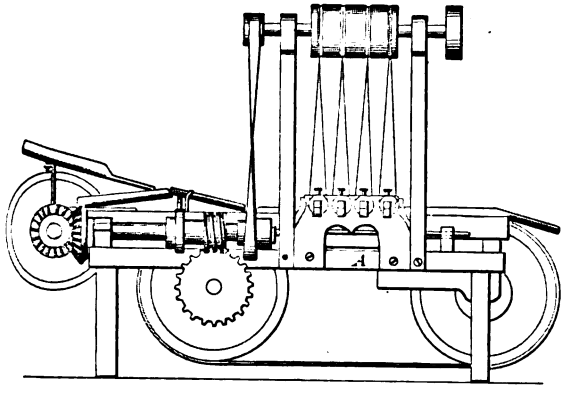

87831—W. Farmer—*Cart.*

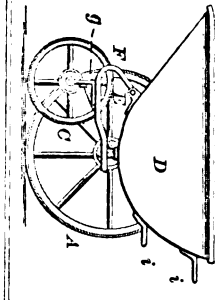

87830—T. & W. A. Ellis—*Brick Mould.*

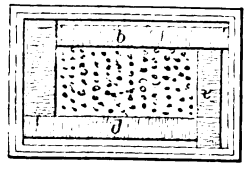

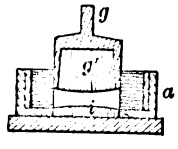

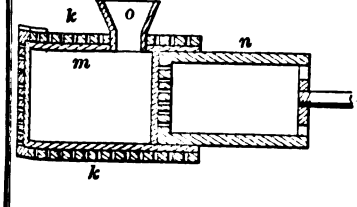

87832—Ferguson & Anderson—*For Moulding Sash Weights.*

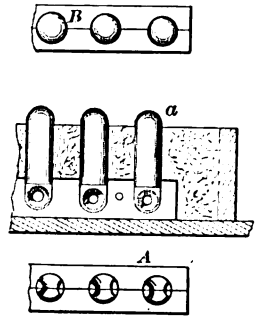

87833—J. B. Fink—*Spindle Wrench.*

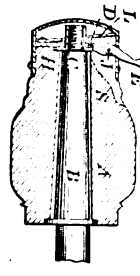

87834—E. F. French—*Piano Lock.*

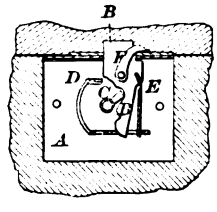

87854—M. R. Kenyon—*Button.*

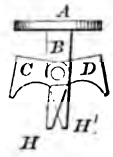

87855—S. S. Kimball—*Planter and Seeding Machine.*

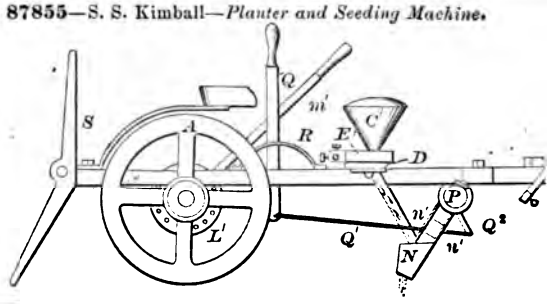

87856—H. J. Kintz—*Husking Thimble.*

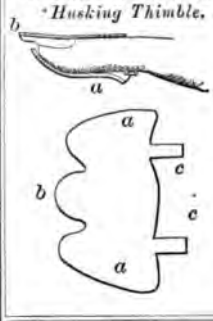

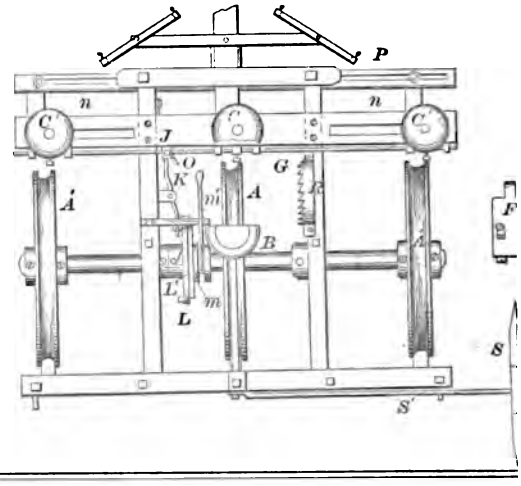

87857—T. Langston—*Lantern.*

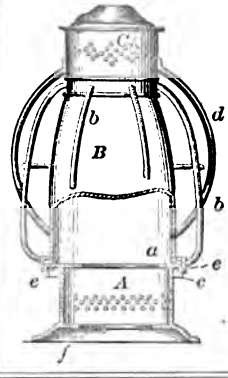

87858—H. S. Lewis—*For Extracting Saccharine Juices from Canes.*

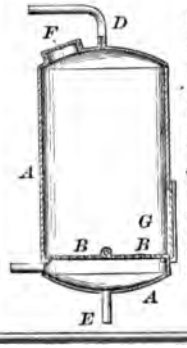

87860—W. R. Manley—*Paddle Wheel.*

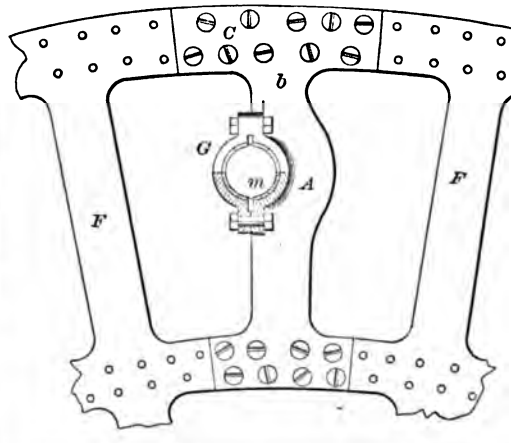

87859—C. Lucas—*Sail Cringle.*

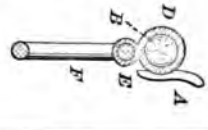

87844—O. B. Hale—*For Pulling Hop Poles.*

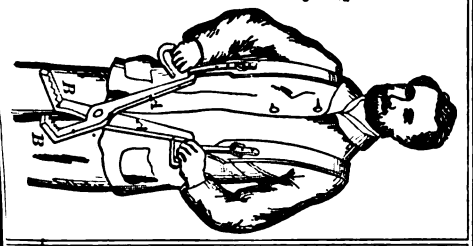

87845—G. Heffner—*Harrow.*

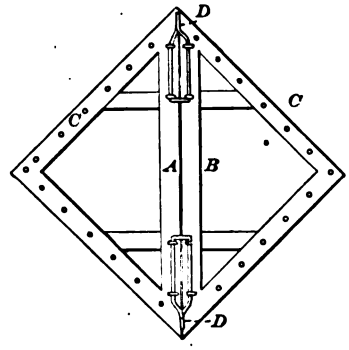

87846—E. Himrod—*Car Heater and Ventilator.*

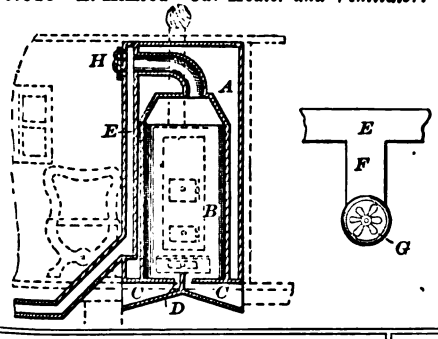

87847—J. Hoke—*Wagon Brake.*

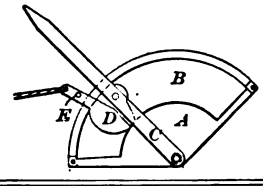

87848—J. T Holden—*Loom.*

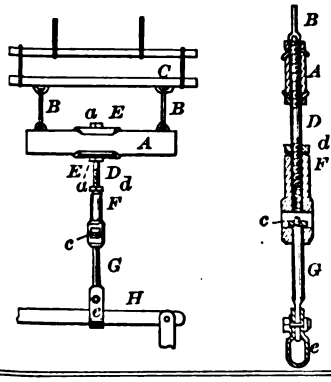

87849—J. B. Holmes—*Mosquito Net.*

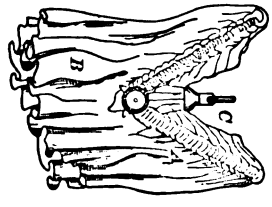

87851—I. Houghtling—*Milk Cooler.*

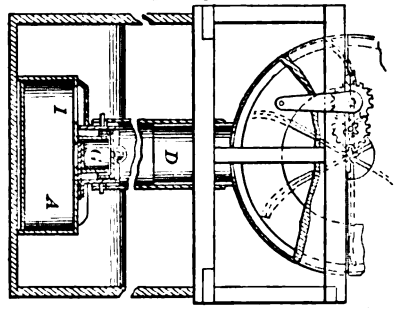

87852—F. Jonas—*Hub Boring Machine.*

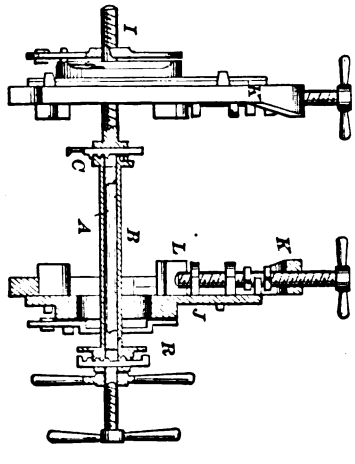

87853—J. G. Kappes—*Mosaic Floor.*

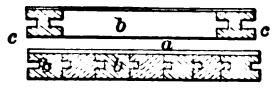

87870—C. H. Nye—*Attaching Tugs to Whiffletrees.*

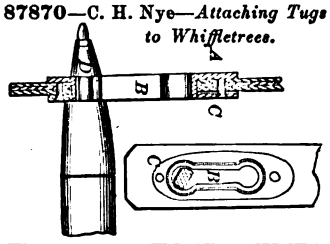

87871—B. & M. L. Oliver—*Stump Extractor.*

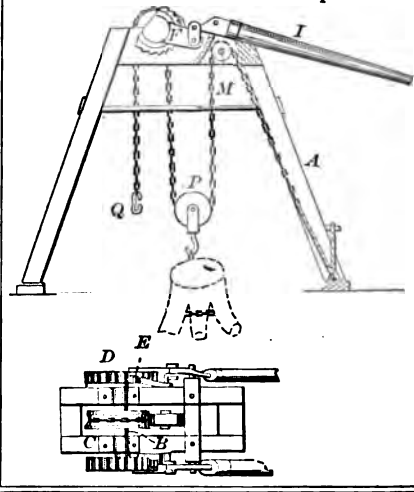

87872—Pense & Lykke—*Harrow.*

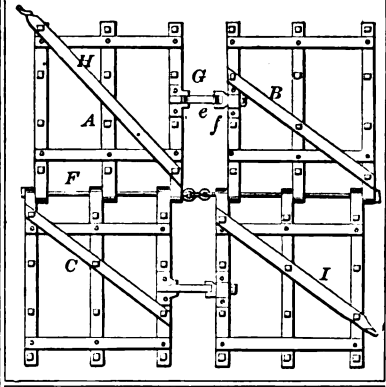

87873—P. Prettyman—*Railway Rail Splice.*

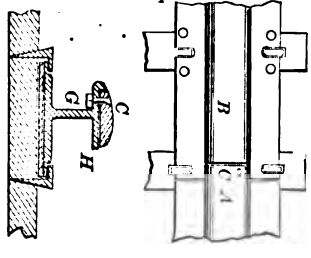

87874—Rhoades & Hamlin—*Threshing Machine.*

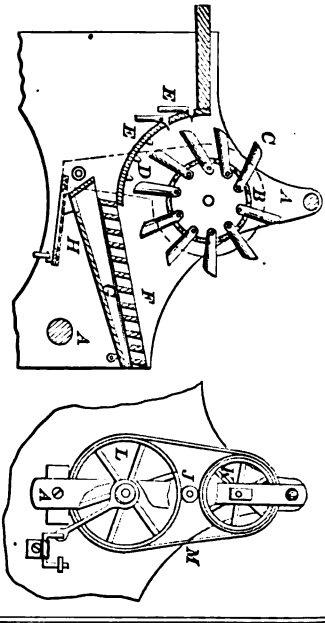

87875—Robinson & Shepard—*Fruit Box.*

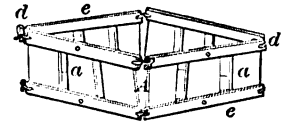

87876—D. R. Russell—*Fire Tongs.*

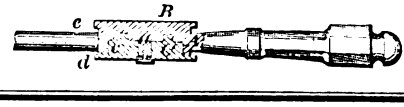

87878—R. Schmid—*Cellar for Preserving Beer.*

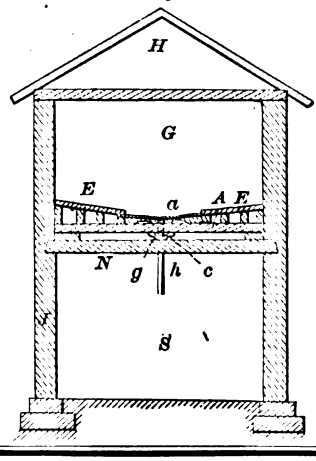

87861—W. R. Manley—*Paddle Wheel.*

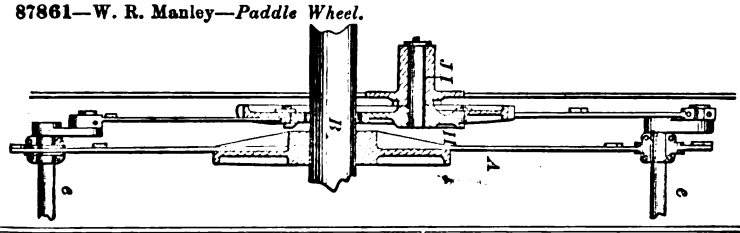

87862—J. McCloskey—*For Making Tubing.*

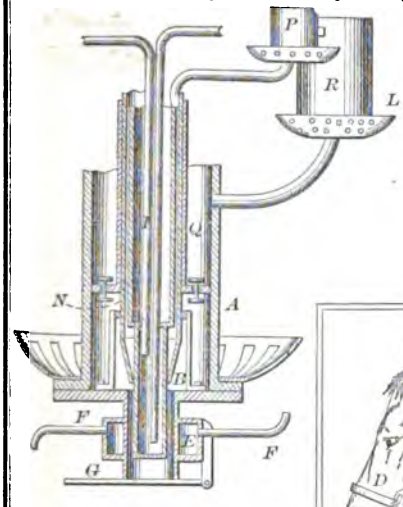

87863—J. Miller—*Rivet Tool.*

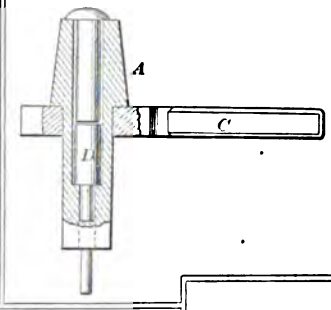

87864—J. H. Minnich—*Bridle Bit.*

87865—Mix & Wildor—*Grapple for Tubes.*

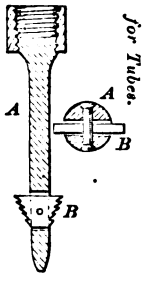

87867—E. L. Morse—*Door Spring.*

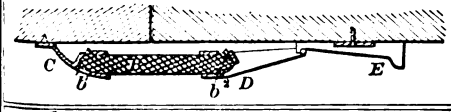

87868—C. E. Murray—*Watchmakers' Tool.*

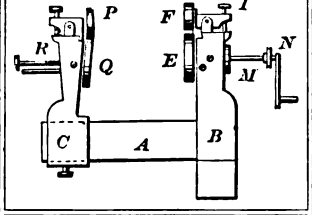

87866—J. G. Moore—*Plow Truck.*

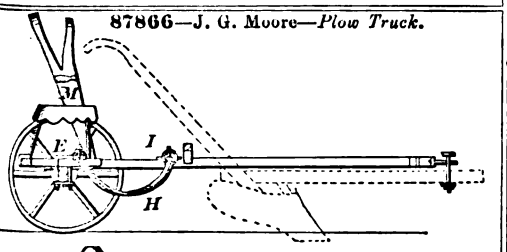

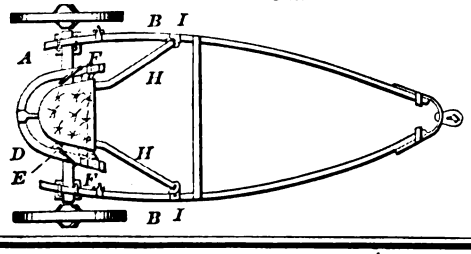

87869—E. Mougaret—*Gaiter Boot.*

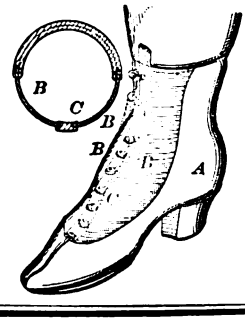

87870—C. H. Nye—*Attaching Tugs to Whiffletrees.*

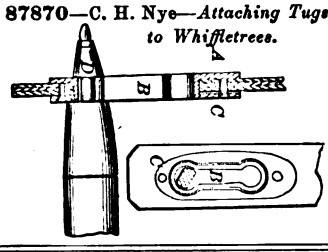

87871—B. & M. L. Oliver—*Stump Extractor.*

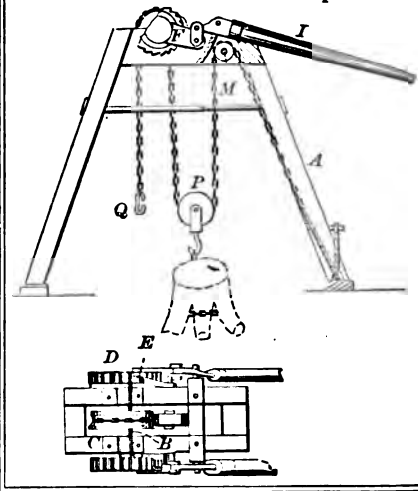

87872—Pense & Lykke—*Harrow.*

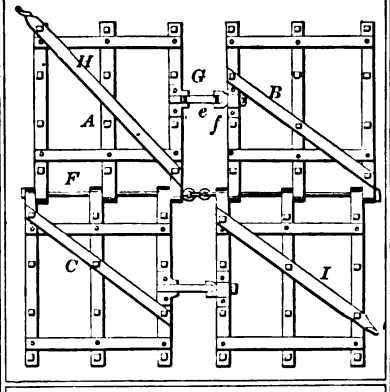

87873—P. Prettyman—*Railway Rail Splice.*

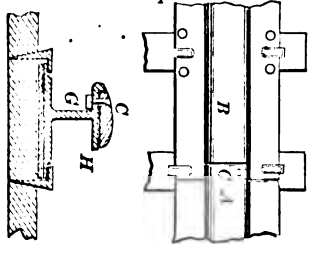

87874—Rhoades & Hamlin—*Threshing Machine.*

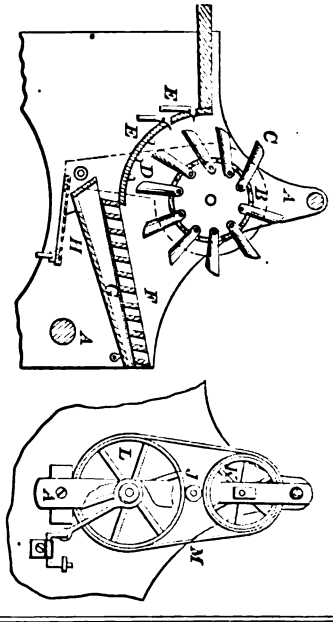

87875—Robinson & Shepard—*Fruit Box.*

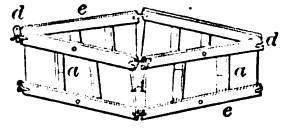

87876—D. R. Russell—*Fire Tongs.*

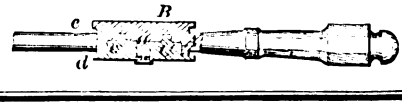

87878—R. Schmid—*Cellar for Preserving Beer.*

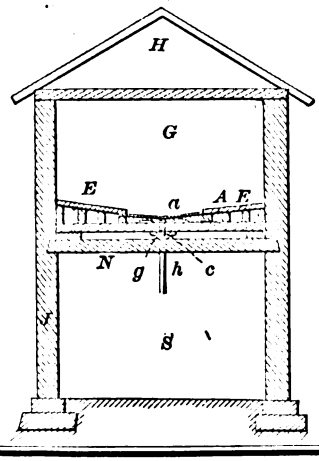

87890—A. Van Horn—*Oil Evaporator.*

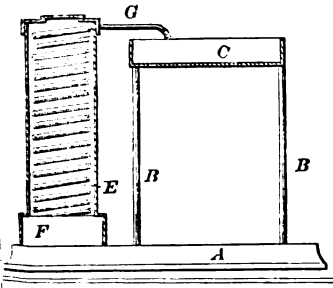

87892—W. West—*Ditching Plow.*

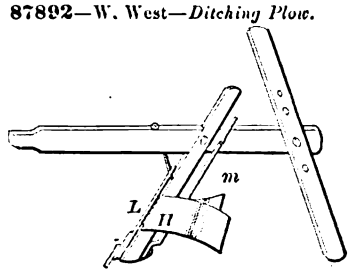

87893—W. Wickersham—*Railroad Chair.*

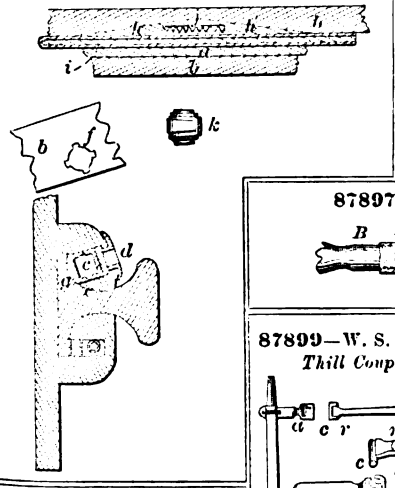

87896—L. C. Wilson—*Harness Rosette.*

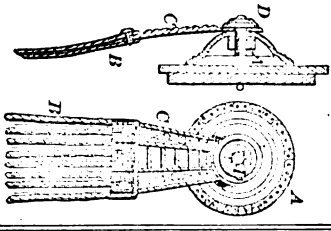

87897—J. D. Wyman—*For Soldering Irons.*

87899—W. S. Appleget—*Thill Coupling.*

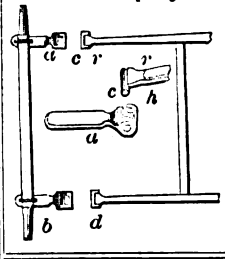

87898—J. B. Alexander—*Lamp Burner.*

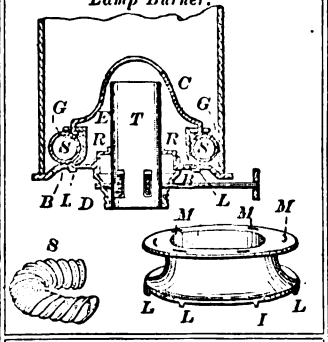

87895—N. B. Williams—*Backgammon Board.*

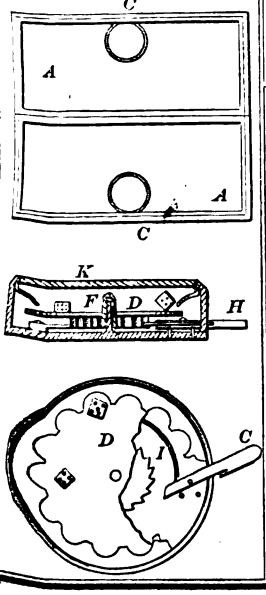

87900—P. Ball—*Branch Joint for Wrought Iron Water Pipes.*

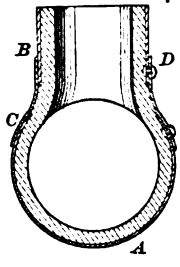

87902—W. H. Berdan—*Horse-Hay Fork.*

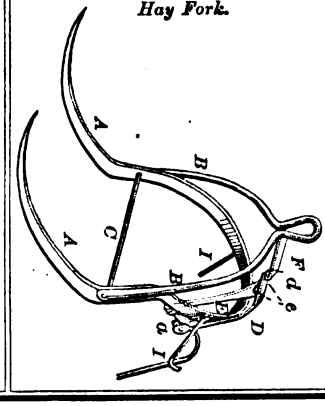

87883—W. H. Smith—*Threshing Machine.*

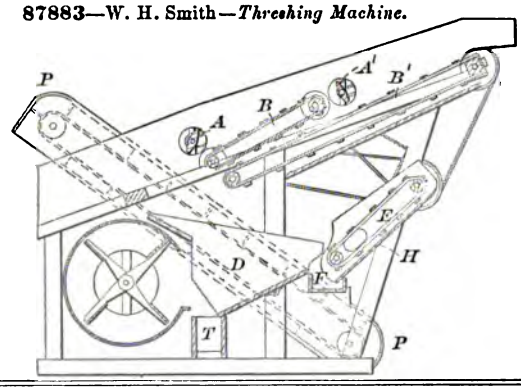

87884—A. J. Sprague—*Fire Place.*

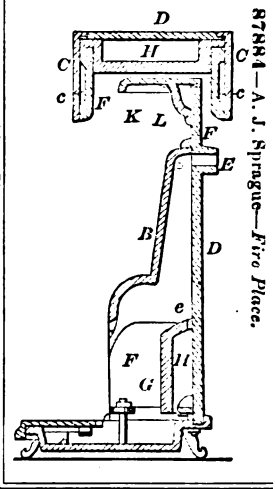

87885—W. C. Switzer—*Planter and Cultivator.*

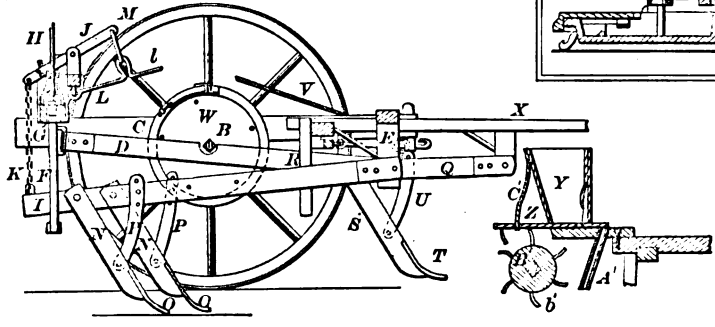

87886—W. H. Towers—*Heating Apparatus.*

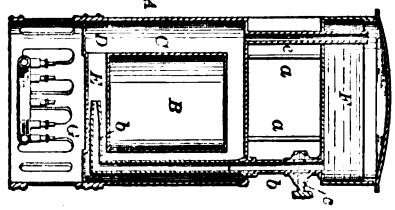

87888—A. Trew—*Oscillating Valve.*

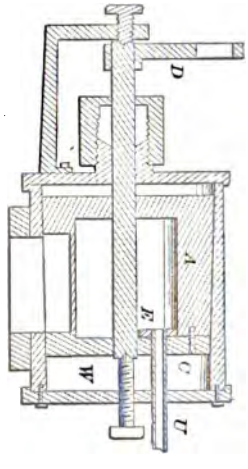

87889—J. G. Trotter—*For Making Iron and Steel*

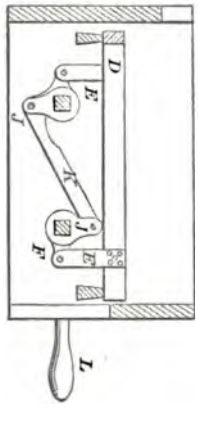

87891—Weible & Robinson—*Saw.*

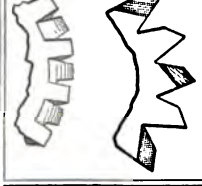

87887—Trask & Ford—*Toy Gun.*

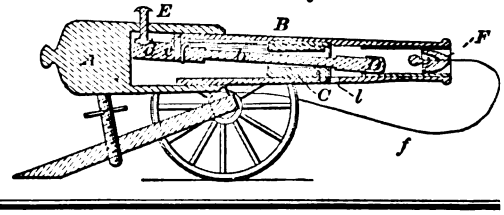

87890—A. Van Horn—*Oil Evaporator.*

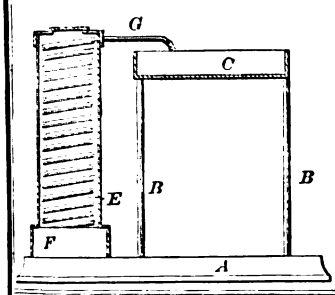

87892—W. West—*Ditching Plow.*

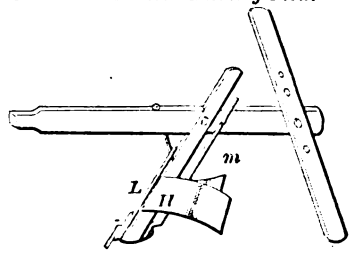

87893—W. Wickersham—*Railroad Chair.*

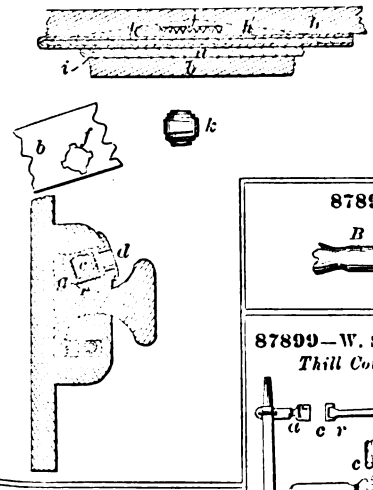

87896—L. C. Wilson—*Harness Rosette.*

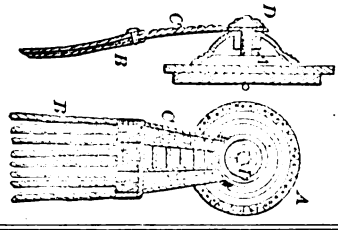

87897—J. D. Wyman—*For Soldering Irons.*

87899—W. S. Appleget—*Thill Coupling.*

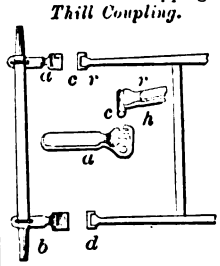

87898—J. B. Alexander—*Lamp Burner.*

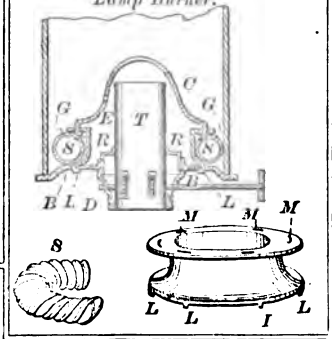

87895—N. B. Williams—*Backgammon Board.*

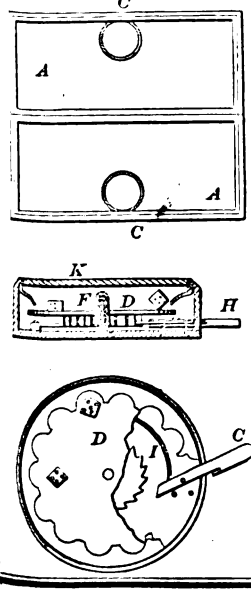

87900—P. Ball—*Branch Joint for Wrought Iron Water Pipes.*

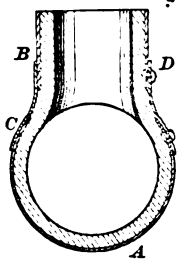

87902—W. H. Berdan—*Horse-Hay Fork.*

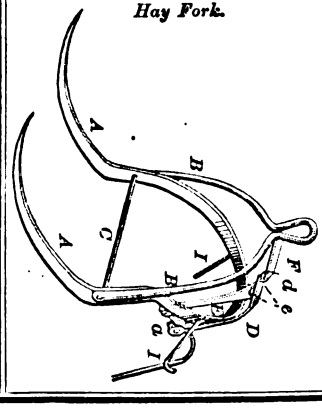

87917—W. Ennis—*Steam Boiler Furnace.*

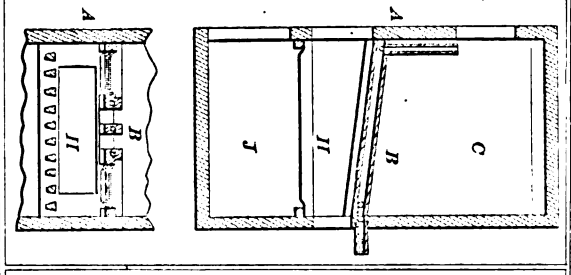

87919—Fellows & Lyon—*Hook Bracket.*

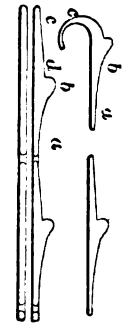

87920—P. Ferrier—*Corn Sheller.*

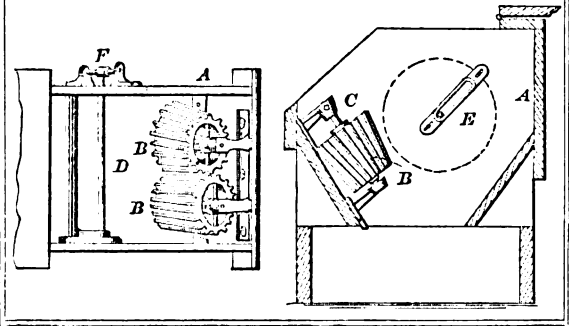

87918—Evans & Conley—*Garbage Box.*

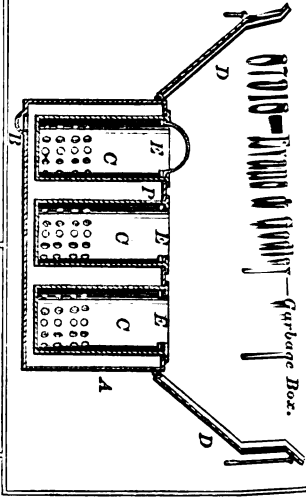

87921—J. R. Finney—*Whip Socket and Rein Holder.*

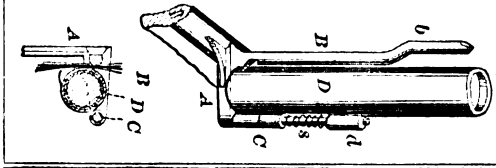

87922—C. Franz—*Gas Burner.*

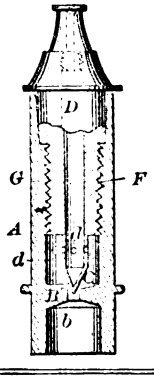

87923—J. C. French—*Cultivator.*

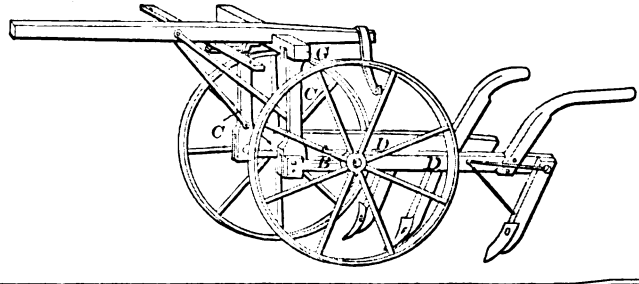

87924—J. C. Gould—*For Cutting Nails.*

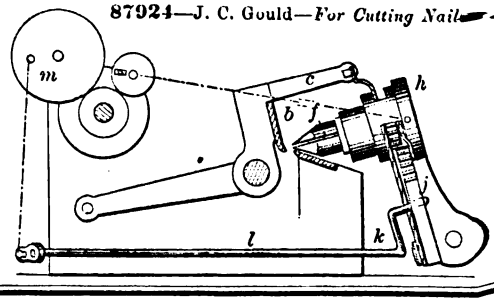

87926—D. Grim—*Carriage Wheel.*

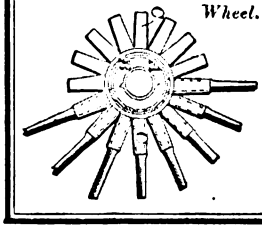

87907—L. Brumbach—*Latch.*

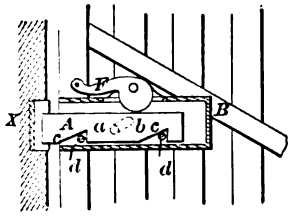

87909—J. R. Champlin—*Ice Cream Freezer.*

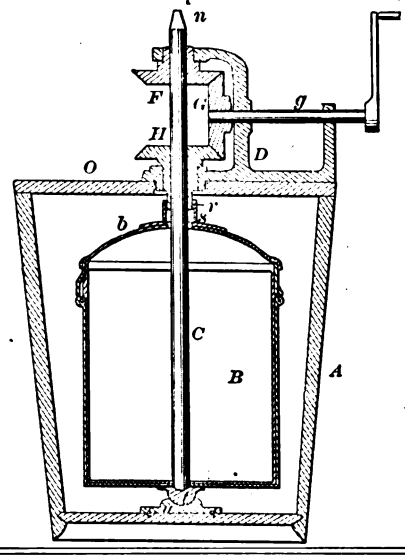

87910—W. Clemson—*Saw.*

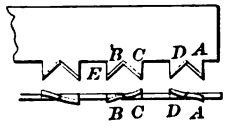

87912—G. Cowing—*Pump.*

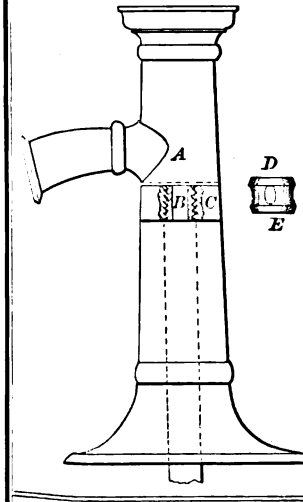

87914—J. M. Davidson—*Cultivator.*

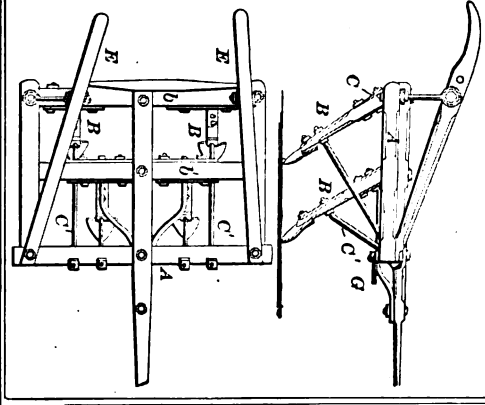

87911—J. W. Colburn—*For Protecting Plants.*

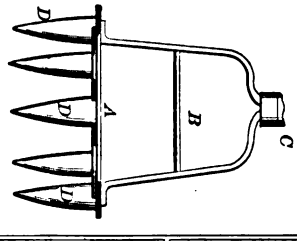

87913—C. Cummings—*Carriage Wheel.*

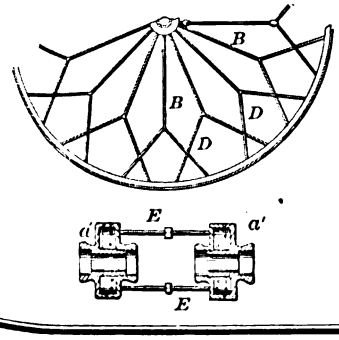

87916—A. B. Ely—*Heel Stiffening.*

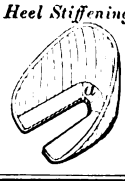

87915—F. W. Devoe—*Can.*

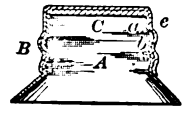

87932—E. F. Hofmann—*Bandage.*

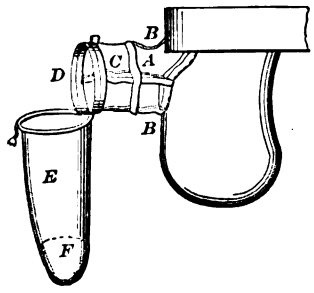

87933—C. Holtz—*Baby Chair.*

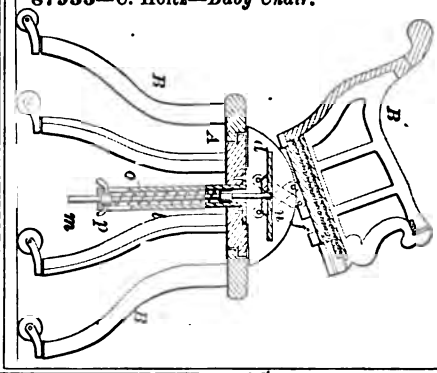

87934—C. B. Horton—*Flour Sacker.*

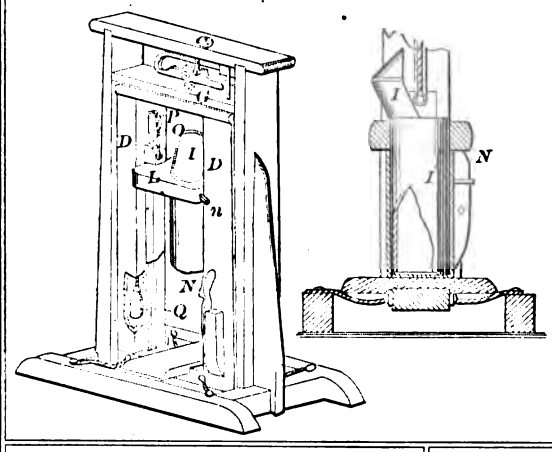

87935—J. Hoyt—*Truck for Moving Pianos.*

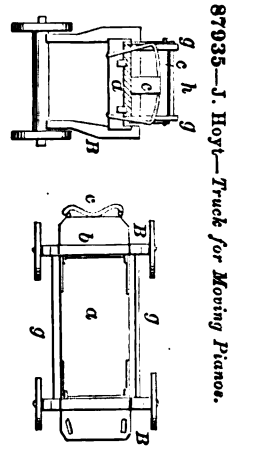

87936—N. W. Hubbard—*Velocipede.*

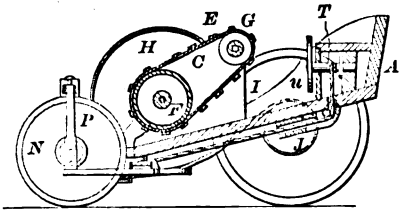

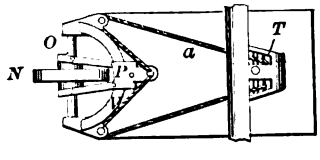

87939—H. C. Ingraham—*Truck.*

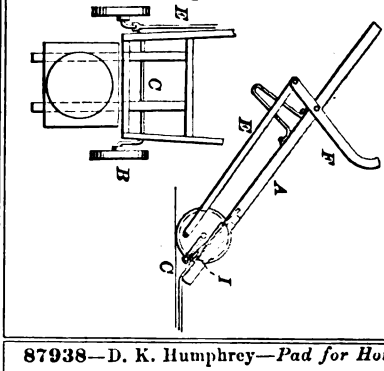

87938—D. K. Humphrey—*Pad for Horses.*

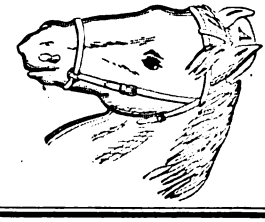

87925—Greer & King—*Stove.*

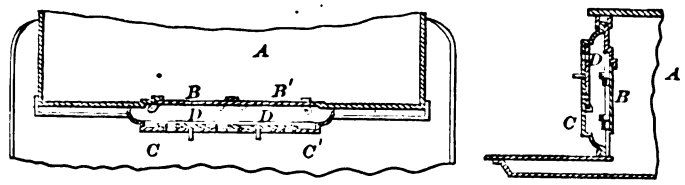

87927—J. H. Hadley—*Carriage Jack.*

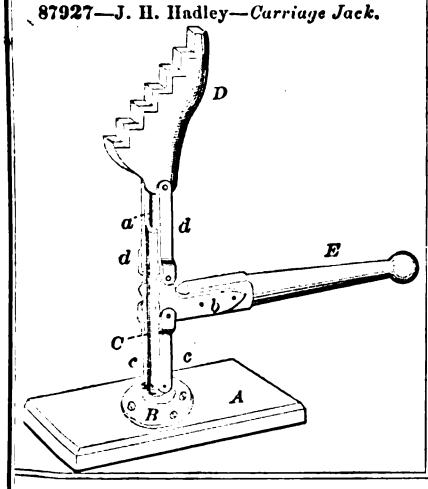

87928—S. H. Hamilton—*Steam Engine.*

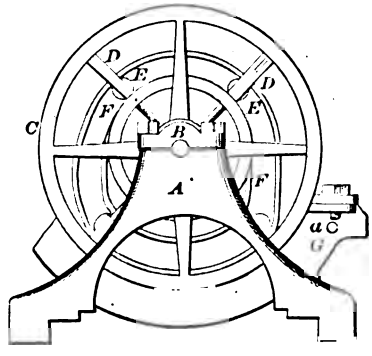

87929—J. T. Hawkins—*Lathe for Turning Spools.*

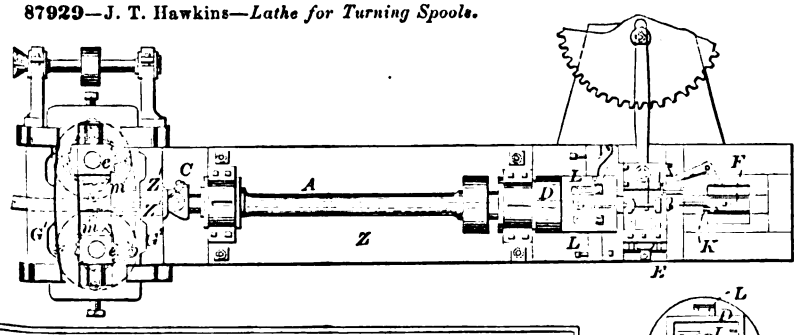

87930—W. Hebdon—*For Damping, &c., Cloth.*

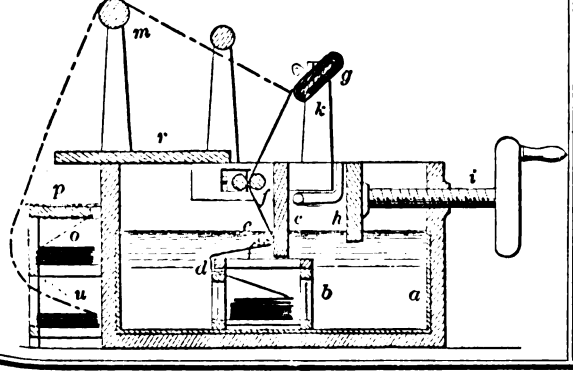

87931—L. Hillebrand—*Trunk Lock.*

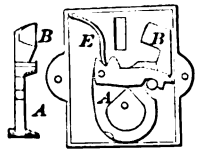

87932—E. F. Hofmann—*Bandage.*

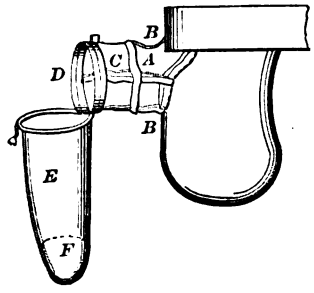

87933—C. Holtz—*Baby Chair.*

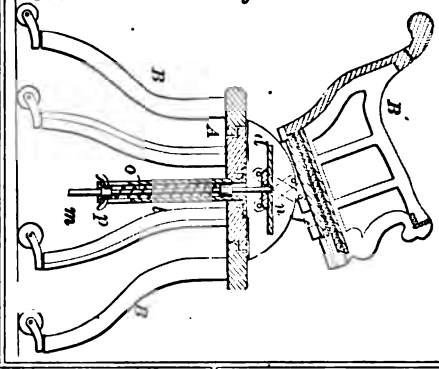

87934—C. B. Horton—*Flour Sacker.*

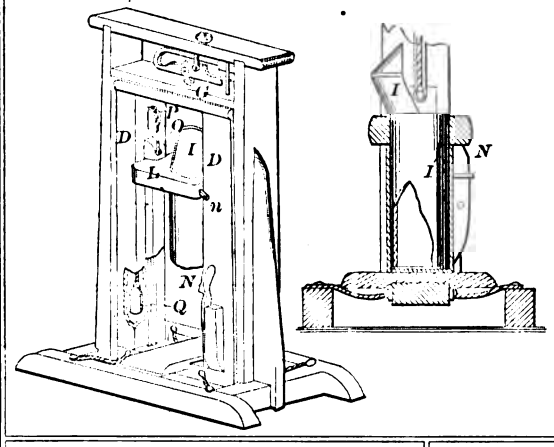

87935—J. Hoyt—*Truck for Moving Pianos.*

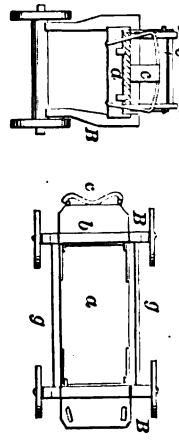

87936—N. W. Hubbard—*Velocipede.*

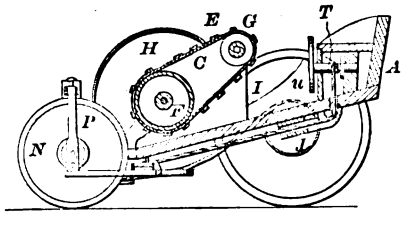

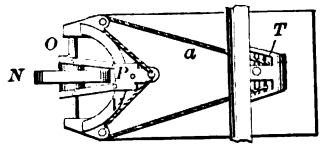

87939—H. C. Ingraham—*Truck.*

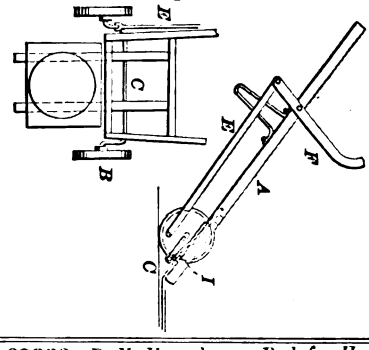

87938—D. K. Humphrey—*Pad for Horse*

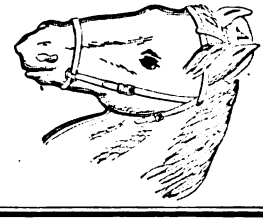

87940—W. A. Ives—*Bit Brace.*

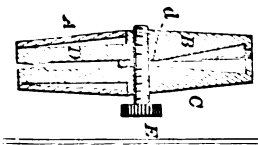

87941—J. F. Johnson, Jr.—*Typographer.*

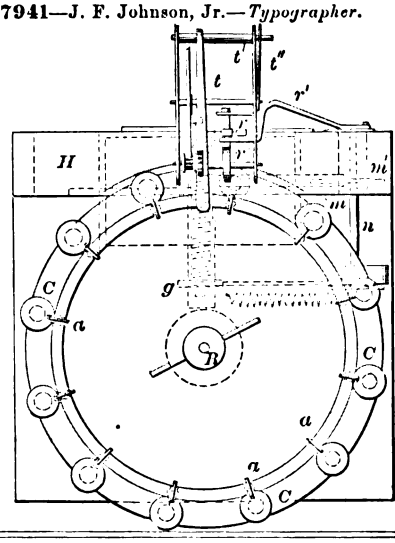

87942—Johnson & Sibley—*Inner Sole for Boots.*

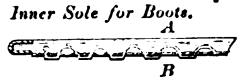

87943—C. P. Kimball—*Sleigh.*

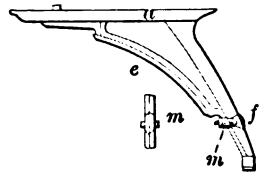

87944—A. L. King—*Flood Gate.*

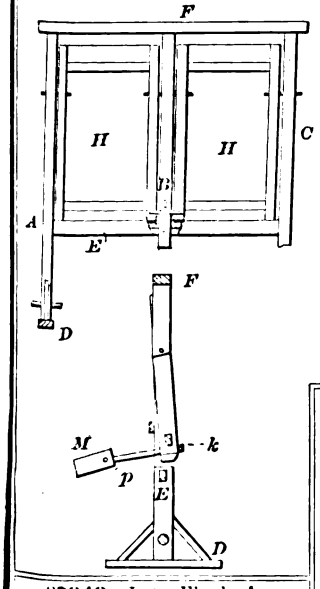

87945—G. W. Kintz—*Trap.*

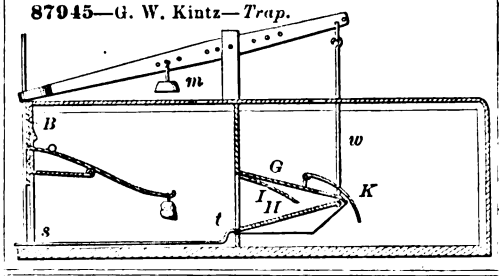

87948—R. O. Lowrey—*Bed Bottom.*

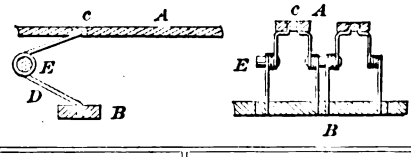

87947—J. L. Linderman—*Seed Sower.*

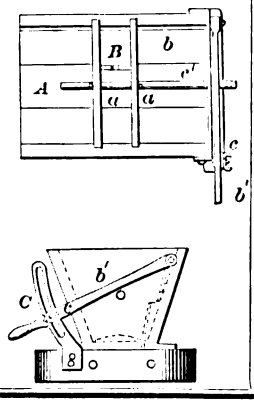

87946—A. M. A. Laforgue—*Surgical Instrument.*

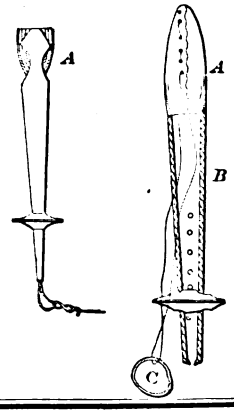

87949—Lutz, Eberly & Becker—*Threshing Machine.*

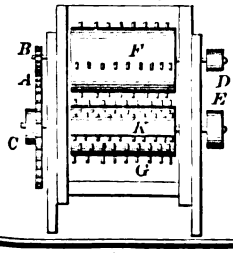

87950—A. H. Marinoni—*Printing Press.*

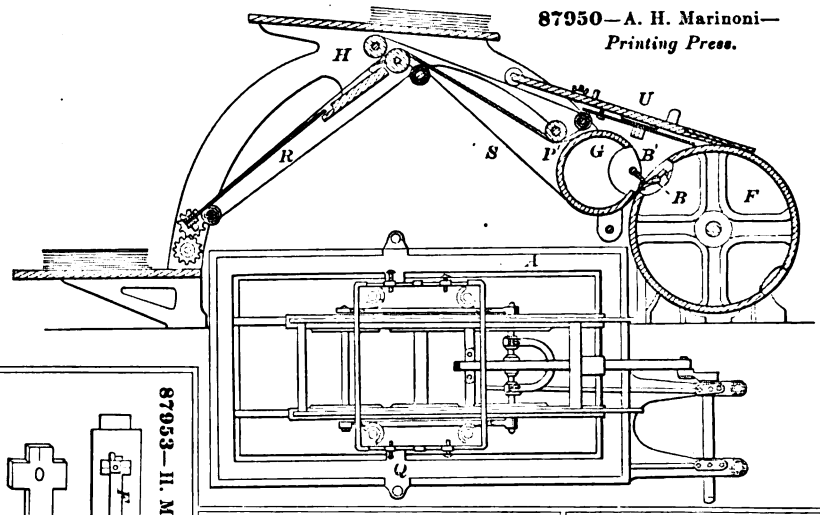

87953—H. McCown—*For Locking Nuts.*

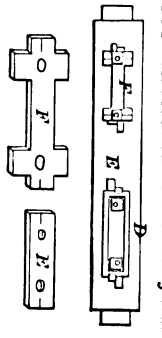

87955—McKee & Fletcher—*For Making Cigars.*

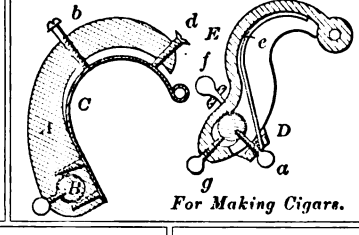

87954—S. F. McGown—*Twine Cutter.*

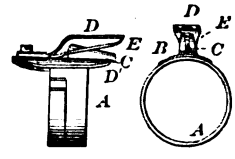

87956—J. Merrill—*Saw Set.*

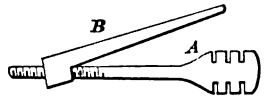

87952—W. McArthur—*Carpet Cleaning Machine.*

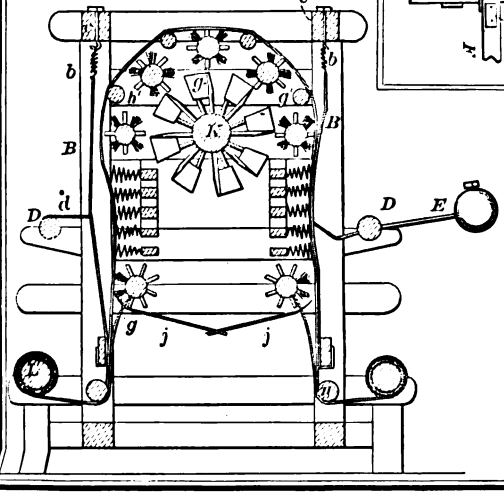

87951—T. J. Marinus—*Cultivator.*

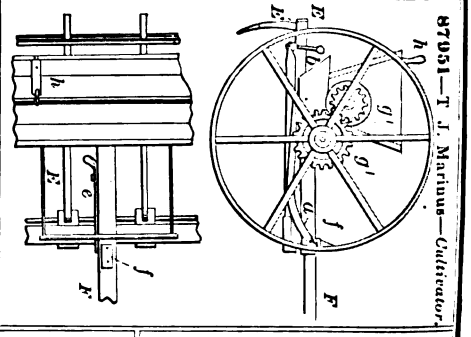

87957—C. H. Miller—*Lamp Bracket.*

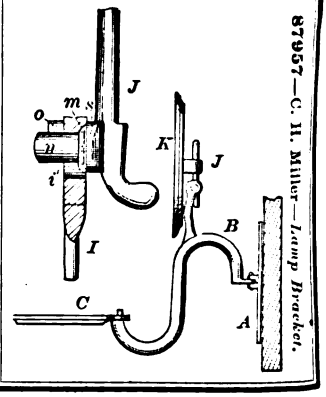

87958—C. H. Miller—*Door Plate and Alarm.*

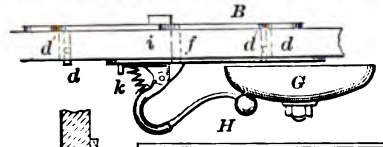

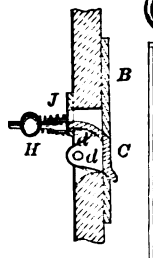

87960—P. Morrison—*Sap Spile.*

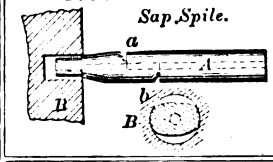

87959—Minor & M. W. & G. W. Nesmith—*Liquid Meter.*

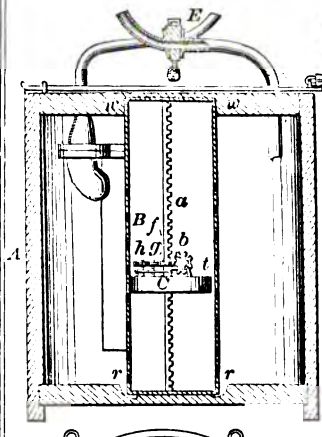

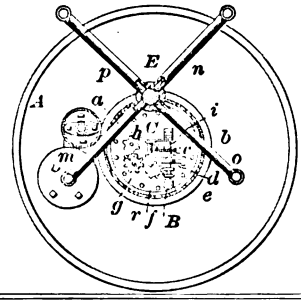

87961—G. Mosman—*Meat Cutter.*

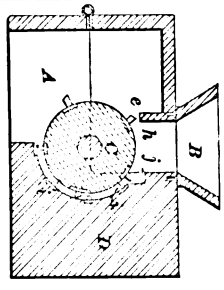

87964—I. E. Palmer—*For Making Cordage.*

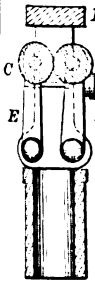

87962—D. Neff—*Soda Fountain.*

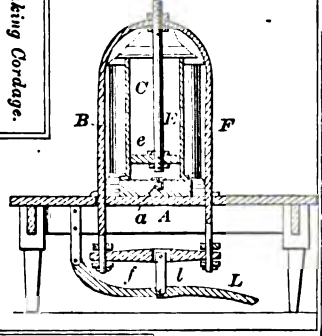

87963—A. & C. W. Palmer—*Harvester Rake.*

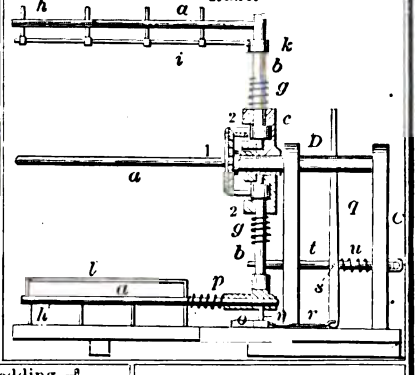

87970—W. Reid—*For Feeding Cattle during Transportation.*

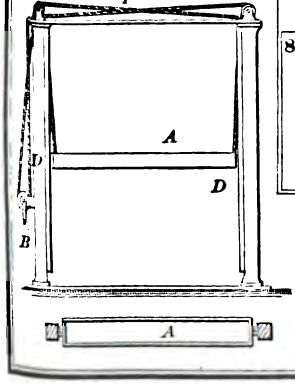

87969—W. F. Redding—*Stove Door Handle.*

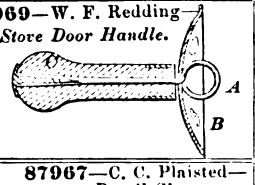

87967—C. C. Plnisted—*Pencil Sharpener.*

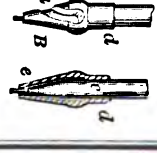

87966—A. Peteler—*Car.*

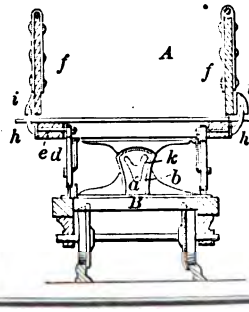

87985—A. P. Stephens—*Metal Cutter.*

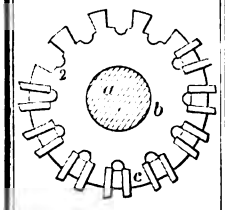

87987—T. B. Stout—*Head Rest.*

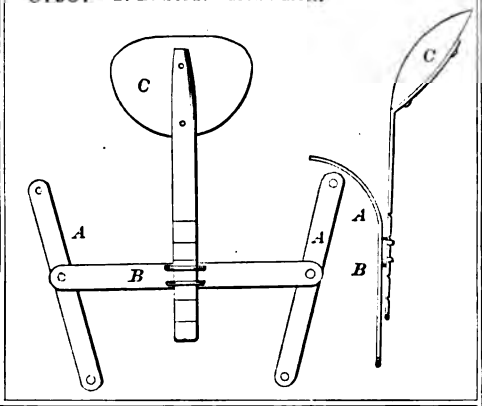

87991—T. H. Tyndale—*Carpet Fastener.*

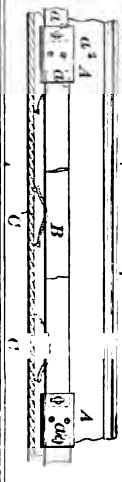

87990—G. H. Todd—*Cartridge Shell.*

87989—C. W. Tierney—*Snow Plow.*

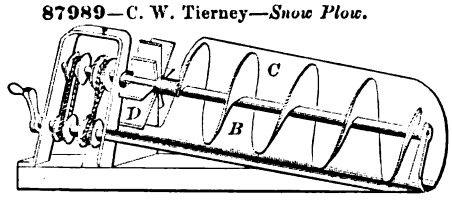

87988—A. Taplin—*Lamp Burner.*

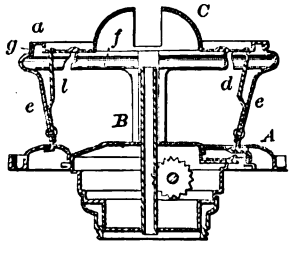

87993—C. H. Weston—*Hose and Pipe Coupling.*

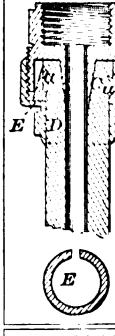

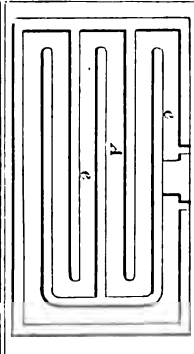

87994—C. H. Weston—*For Cloth Pressing*

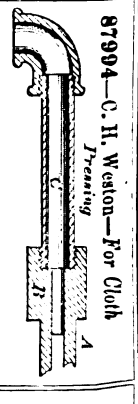

87992—J. Waters—*Steam Generator Gauge Cock.*

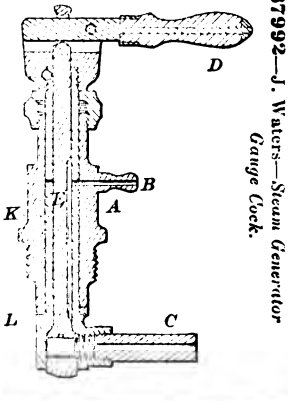

87995—A. S. Whittemore—*Grain Thresher.*

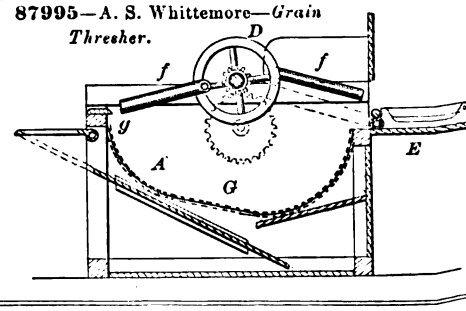

87997—D. Williamson—*Fire Arm.*

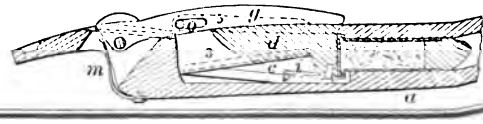

87977—J. H. Shireman—*Horse Rake.*

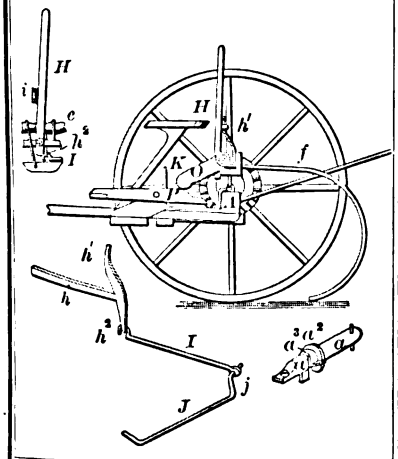

87978—A M. Shurtleff—*Atomizing Apparatus.*

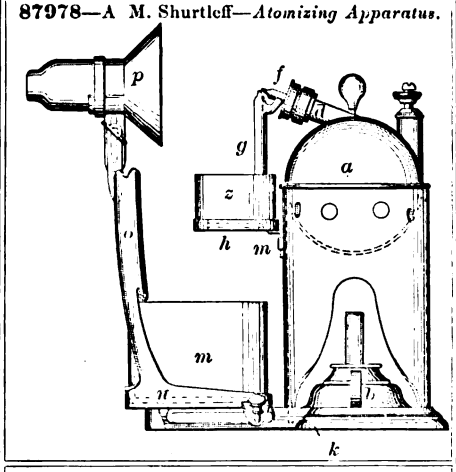

87979—E. Huoncker—*Horse Hay Fork.*

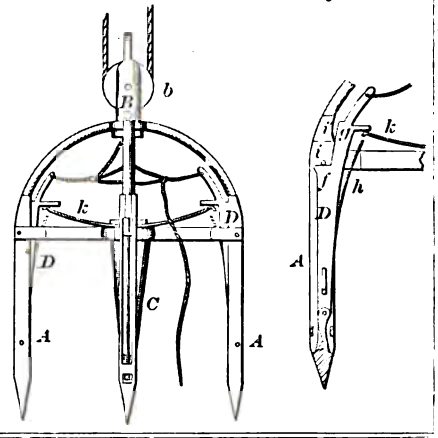

87983—N. Stafford—*Stencil Cutting Gauge.*

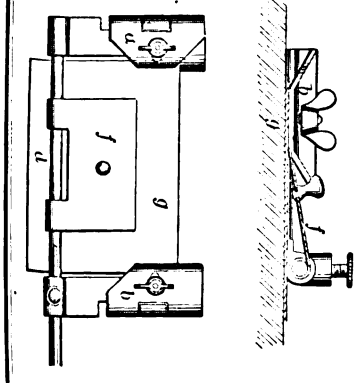

87982—J. M. Spangler—*Horse Rake and Hay Spreader.*

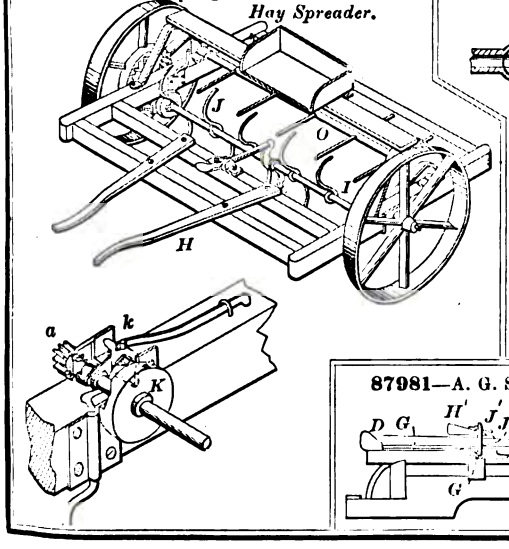

87981—G. A. Starkweather—*For Leaching Bark and other Material.*

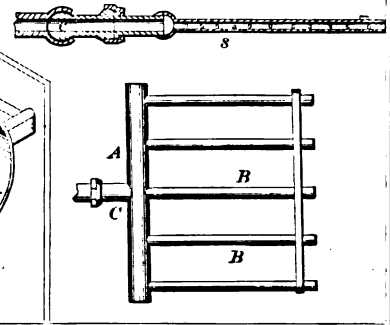

87981—A. G. Snyder—*Wood Bending Machine.*

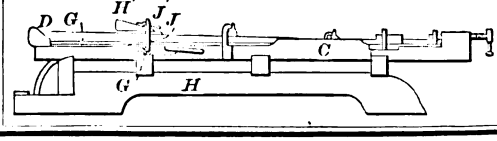

88009—R. Chesnut—*Hay Raker and Loader.*

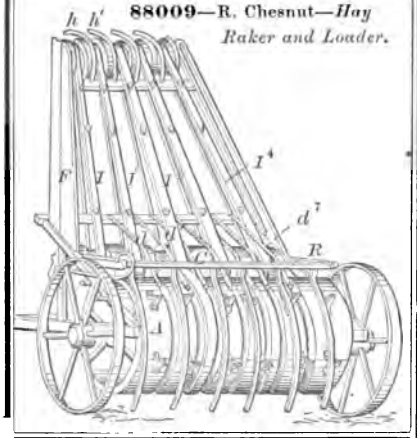

88010—S. & C. T. Chester—*Tripping Mechanical Detents.*

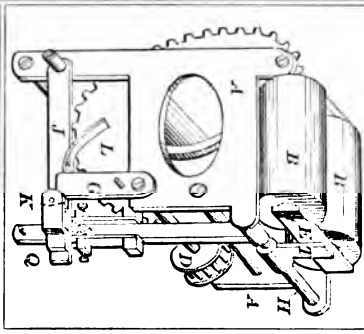

88011—O. E. Clark—*Cooking Stove.*

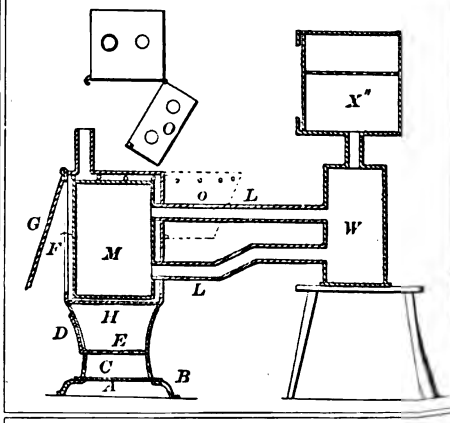

88012—W. A. Cobb—*Projectile.*

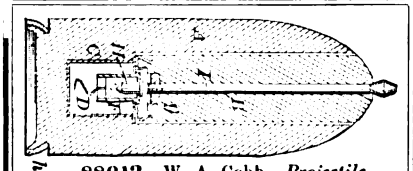

88014—J. Coyle—*Flour Sifter.*

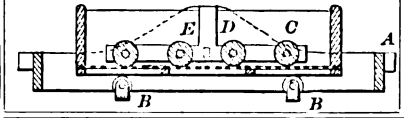

88013—H. W. Connor—*Oar.*

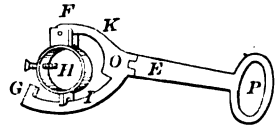

88016—F. P. Deuel—*For Butter Making.*

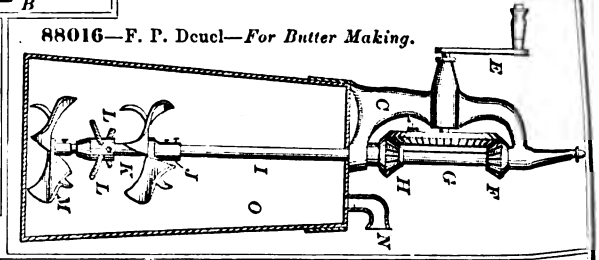

88015—J. Dampman—*Lifting Jack.*

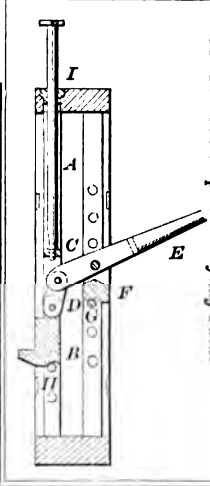

88017—L. R. Dexter—*Wrench.*

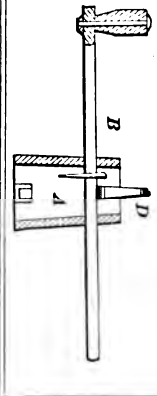

88018—E. L. Dorsey—*Road Scraper.*

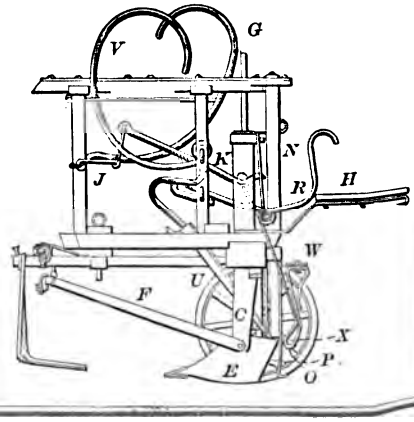

87998—S. Winkley—*Spike.*

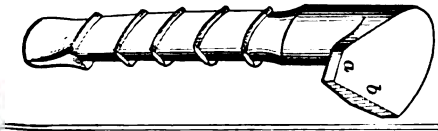

87999—C. Witty—*Velocipede.*

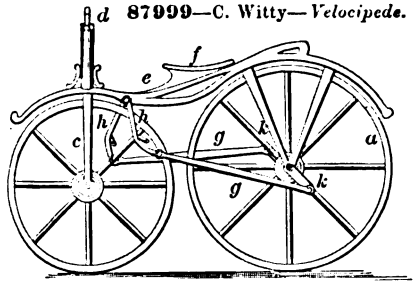

88001—J. B. Park—*Water Wheel.*

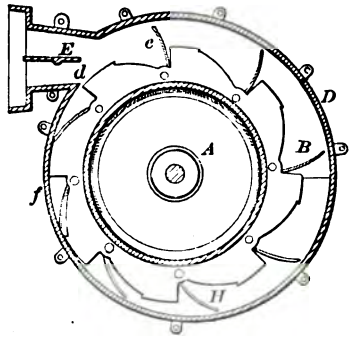

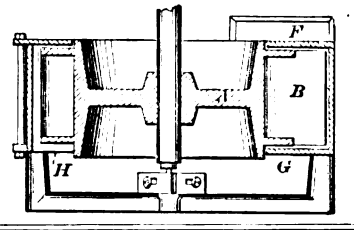

88003—W. Baker—*Breech Plates for Guns.*

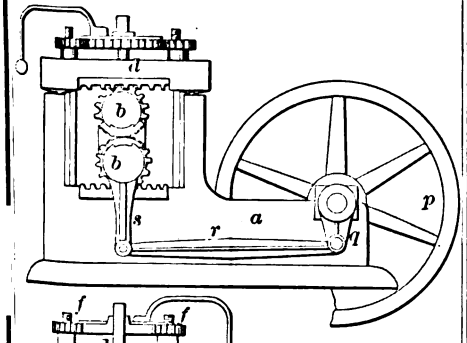

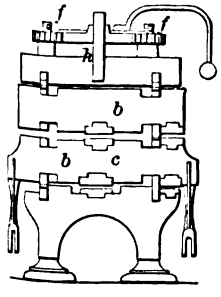

88008—L. S. & Z. H. Chase—*Valve for Vessel Bottoms.*

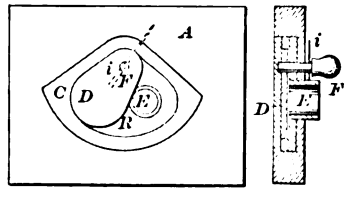

88000—A. T. Perrino—*Boot Heel.*

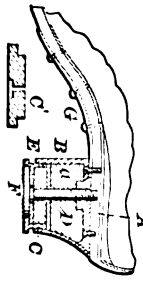

88005—J. Boden—*Boiler Feeder.*

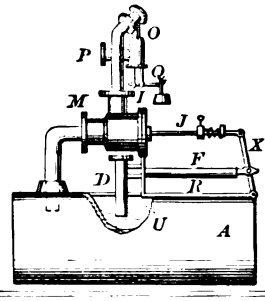

88006—W. L. Burton—*Heating Apparatus.*

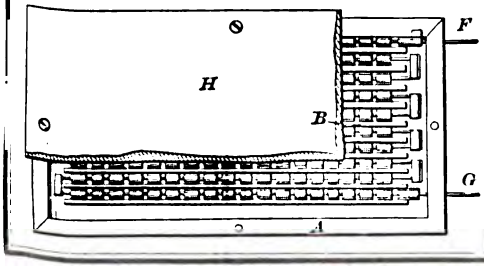

88007—E. G. Cameron—*Fifth Wheel for Vehicles.*

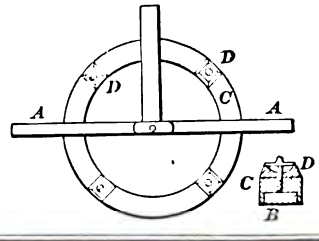

88009—R. Chesnut—*Hay Raker and Loader.*

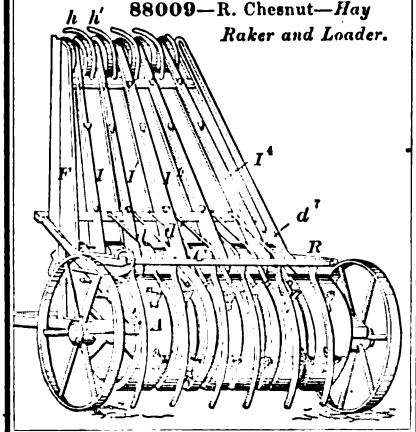

88010—S. & C. T. Chester—*Tripping Mechanical Detente.*

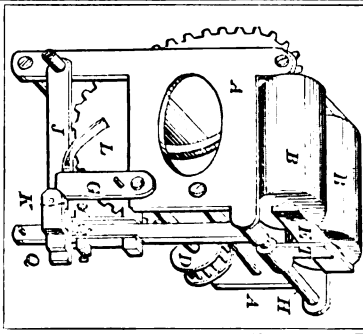

88011—O. E. Clark—*Cooking Stove.*

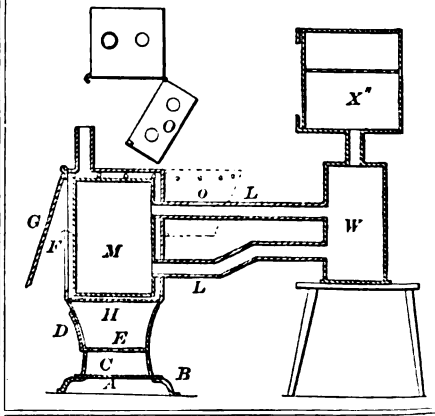

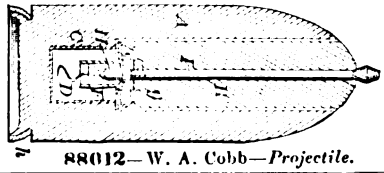

88012—W. A. Cobb—*Projectile.*

88014—J. Coyle—*Flour Sifter.*

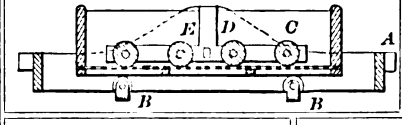

88013—H. W. Connor—*Oar.*

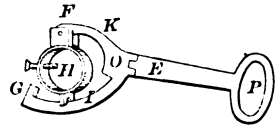

88016—F. P. Deuel—*For Butter Making.*

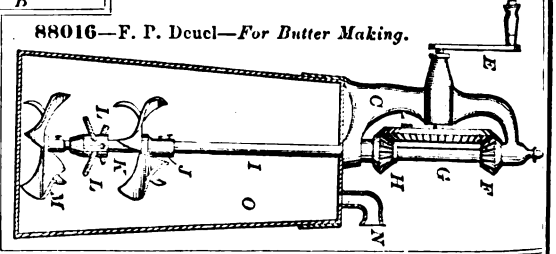

88015—J. Dampman—*Lifting Jack.*

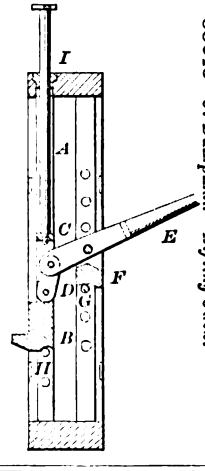

88017—L. R. Dexter—*Wrench.*

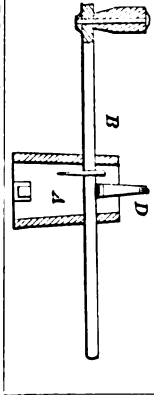

88018—E. L. Dorsey—*Road Scraper.*

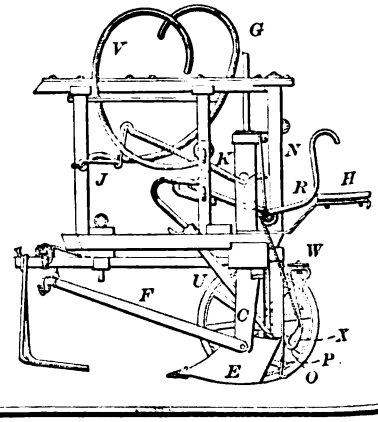

88039—M. C. Hawkins—*Sewing Machine.*

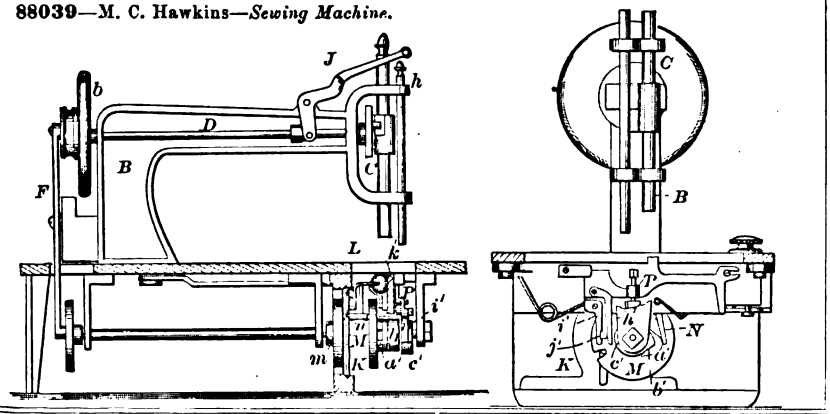

88042—S. Jennings—*Thill Shifter.*

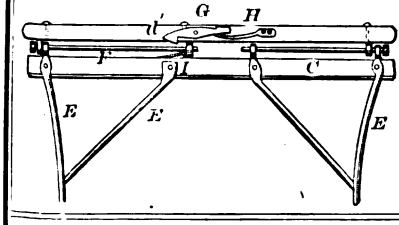

88041—E. Hutchins—*Printers' Galley.*

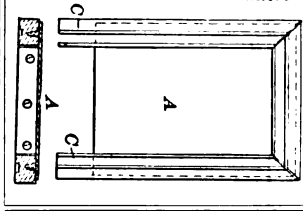

88043—J. R. Jones—*Harvester Reel.*

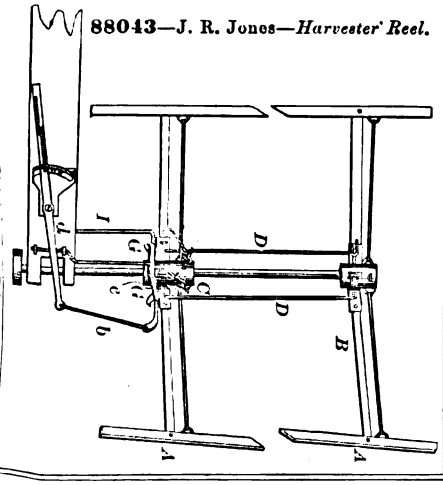

88045—H. Landes—*Cultivator.*

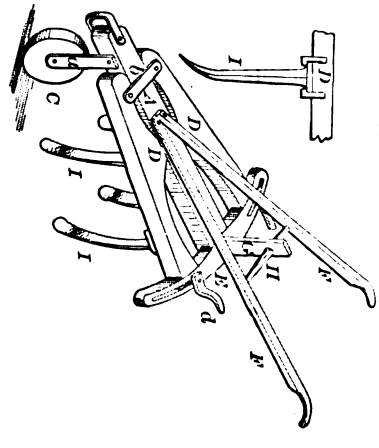

88044—J. H. & J. Kiplinger—*Fly Trap.*

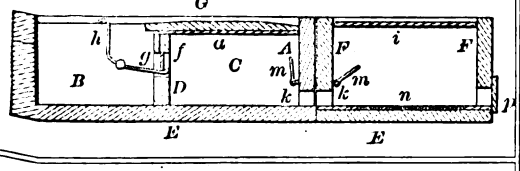

88050—J. H. Livingston—*Boot.*

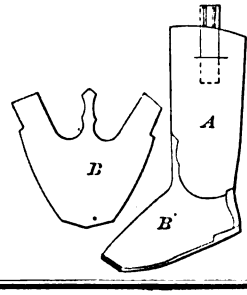

88046—Lane & Healy—*Harrow.*

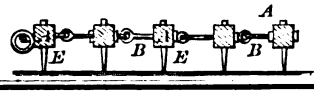

88029—R. R. Frohock—*Last Machine.*

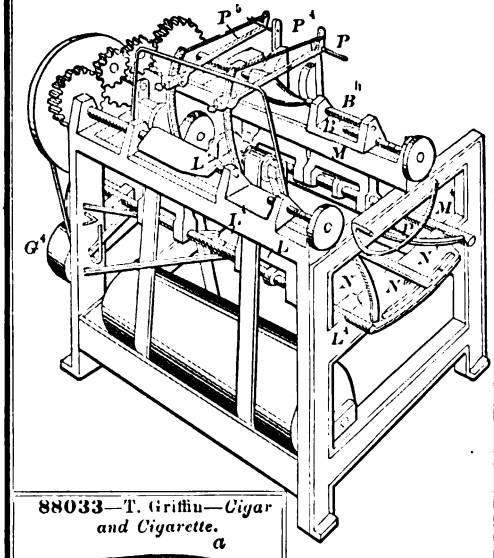

88032—D. W. Green—*Faucet.*

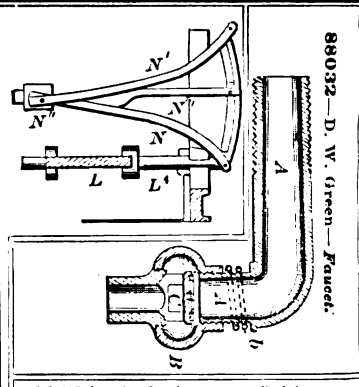

88034—A. Grohmann—*Cultivator.*

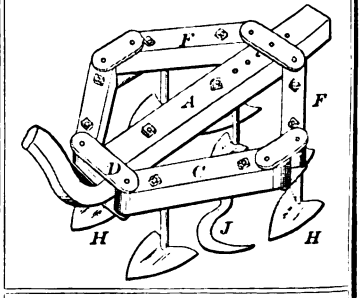

88033—T. Griffin—*Cigar and Cigarette.*

88031—W. H. Goodale—*Cone Spring.*

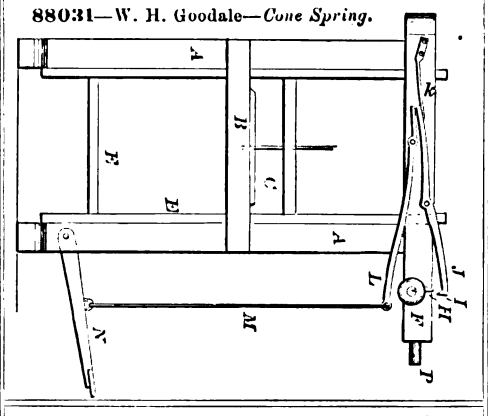

88038—J. H. Harris—*Trace Carrier.*

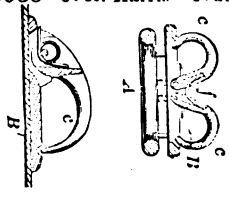

88040—H. R. Huling—*Mechanical Movement.*

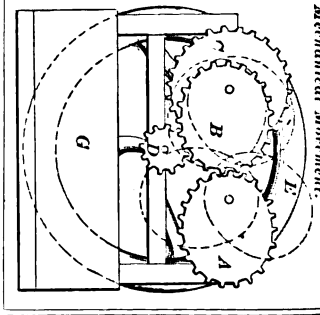

88037—L. M. Ham—*Slate Punching and Cutting Machine.*

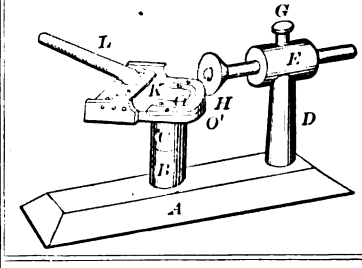

88035—S. Gwynn—*For Vegetable Membrane.*

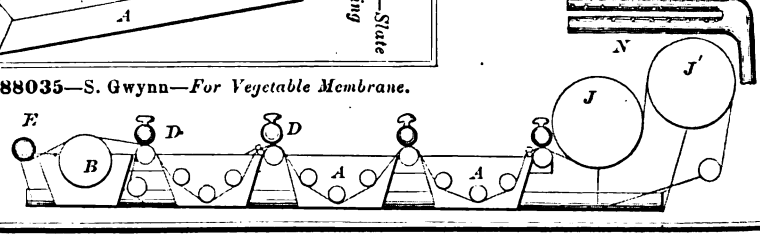

88039—M. C. Hawkins—*Sewing Machine.*

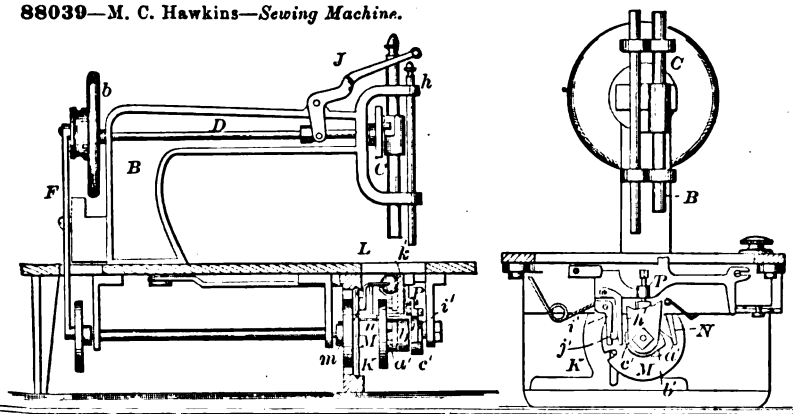

88042—S. Jennings—*Thill Shifter.*

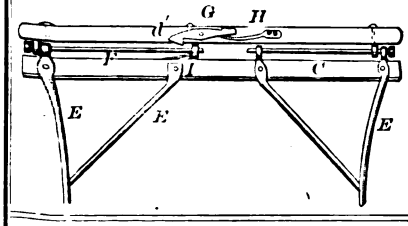

88041—E. Hutchins—*Printers' Galley.*

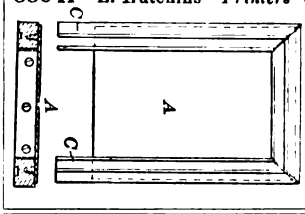

88043—J. R. Jones—*Harvester Reel.*

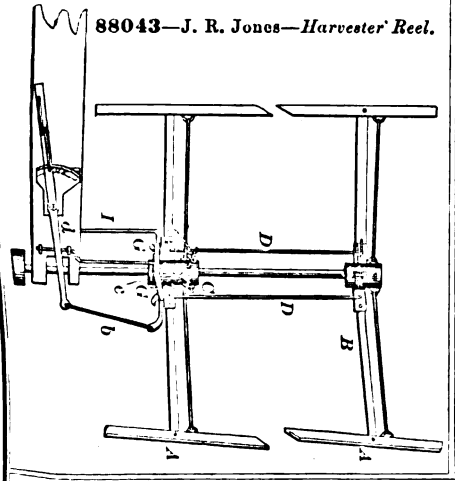

88045—H. Landes—*Cultivator.*

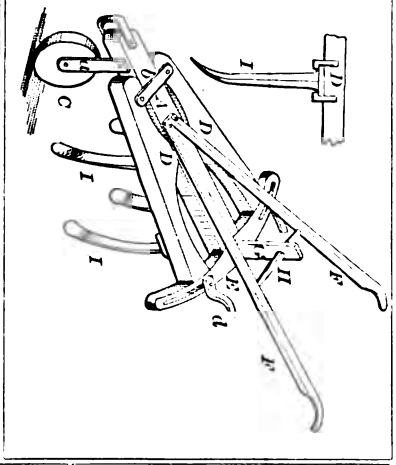

88044—J. H. & J. Kiplinger—*Fly Trap.*

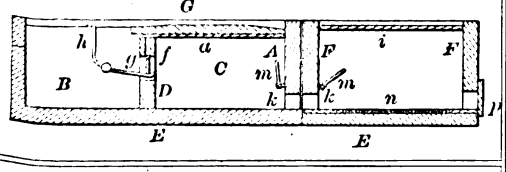

88046—Lane & Healy—*Harrow.*

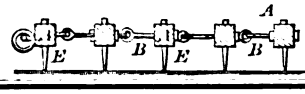

88050—J. H. Livingston—*Boot.*

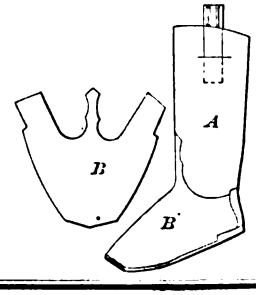

88047—B. M. Lawrence—*Hygieometer.*

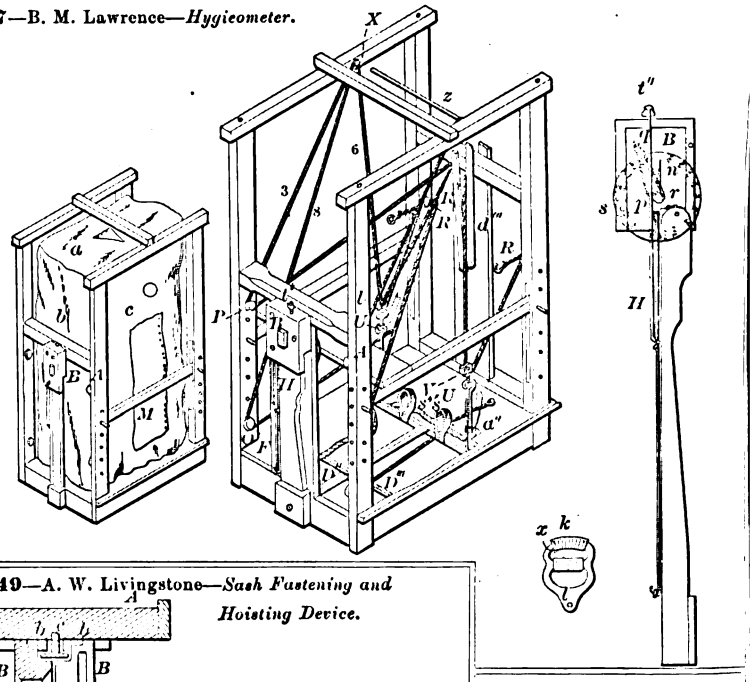

88049—A. W. Livingstone—*Sash Fastening and Hoisting Device.*

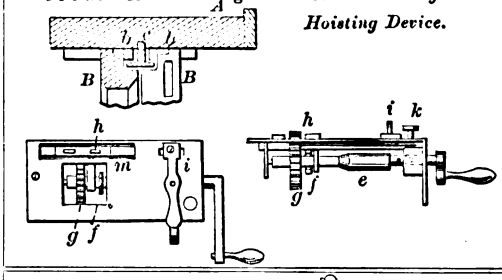

88048—D. P. Leach—*Corn Planter.*

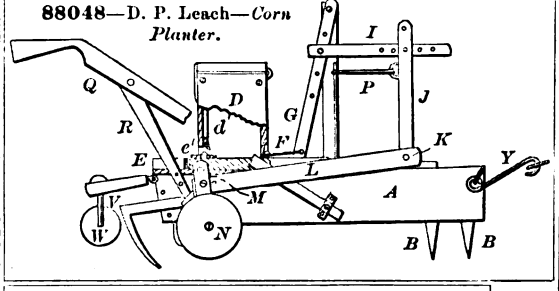

88053—Mattox & Corson—*Chamfering Machine.*

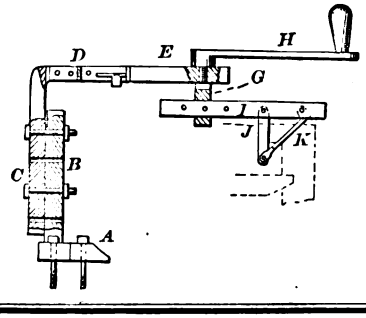

88052—W. R. Manley—*Paddle Wheel.*

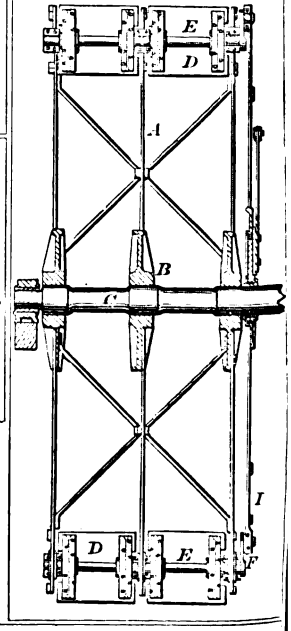

88051—J. F. Lowe—*Hoe.*

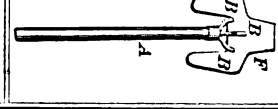

88054—R. McCully—*Bath Tub.*

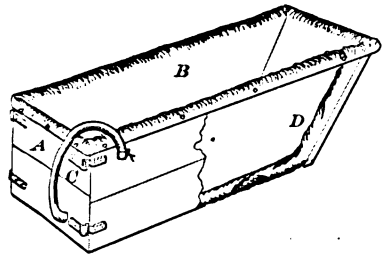

88055—F. McManus—*Car Heater.*

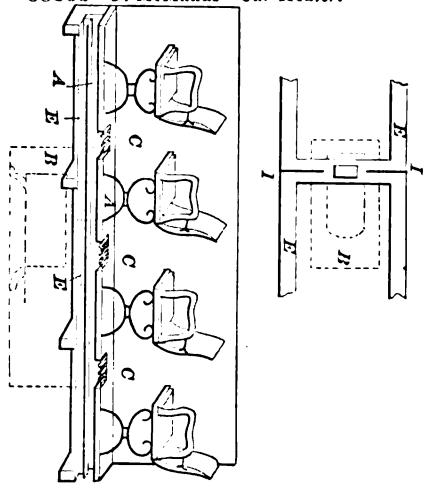

88056—C. Messenger—*Churn.*

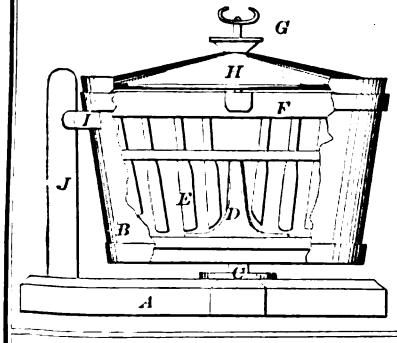

88057—
W. A. Middleton—*Coat Hook and Line Holder.*

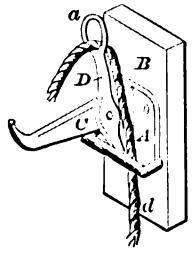

88058—P. Miller Jr.—*Bee Feeder.*

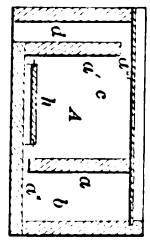

88061—S. R. Morgan—*For Transmitting Rotary Motion.*

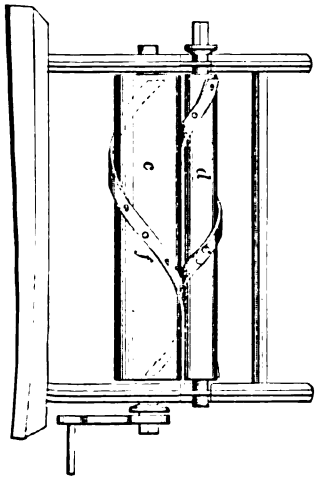

88060—J. L. Moore—*Pencil Holder.*

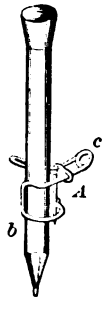

88059—C. W. Millerd—
Cotton Press.

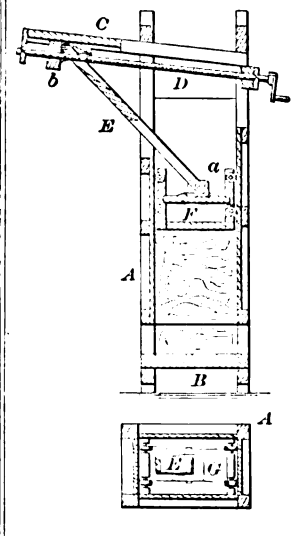

88063—I. H. Newton—*For Turning Logs in Mills.*

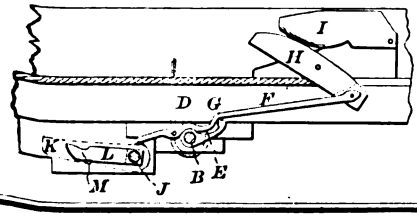

88062—J. Naugle—*Automatic Fan.*

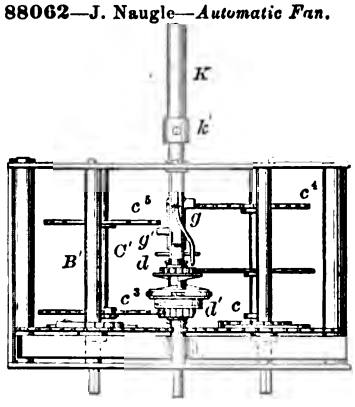

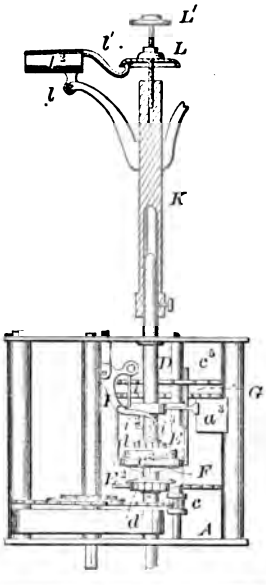

88065—F. M. Nixon—*Spinning Machine.*

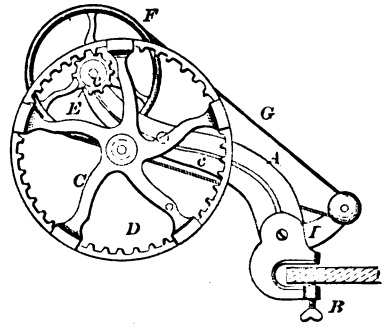

88066—S. Oakman—*Glass Furnace.*

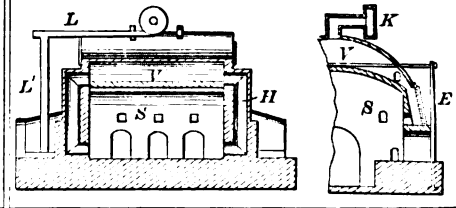

88067—O. Paddock—*Horse Hay Fork.*

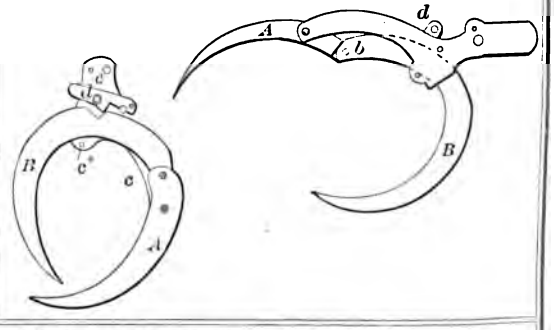

88072—E. R. Playle—*Crucible.*

88068—C. L. Page—*Money Drawer.*

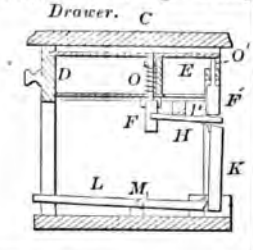

88069—C. D. Palmister—*Water Elevator.*

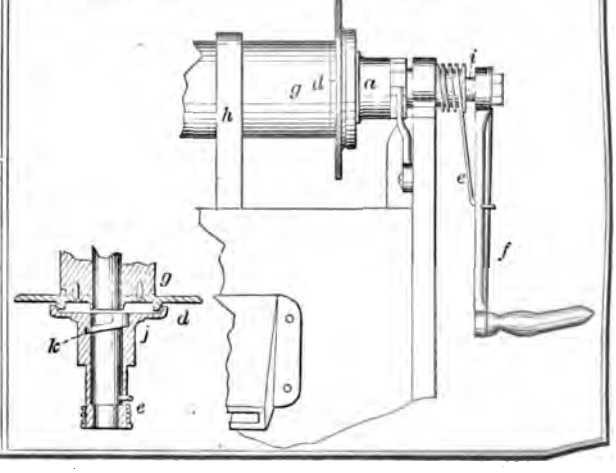

88070—B. Partello—*Bed Bottom.*

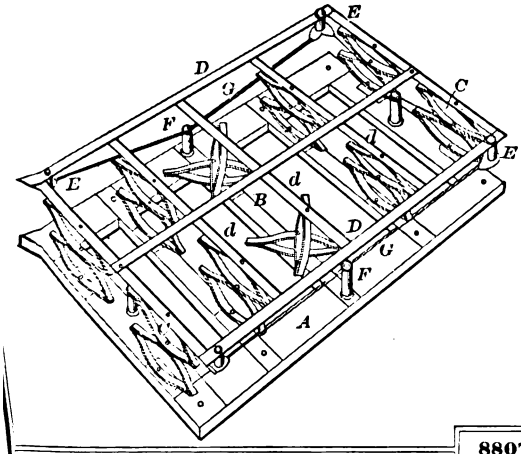

88071—H. Perry—*Fruit Gatherer.*

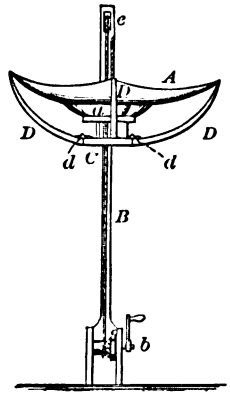

88073—G. S. Randall—*Melodeon Case.*

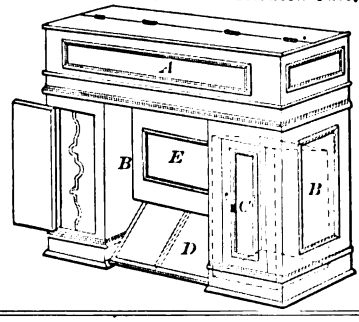

88076—Reynolds & Clark—*Tea Pot.*

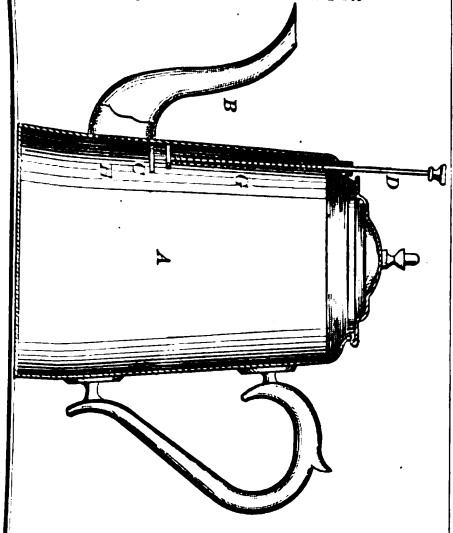

88074—A. Rathbun—*Grape Trellis.*

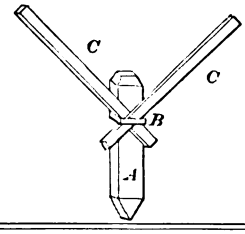

88077—L. H. Rogers—*Toilet Mirror.*

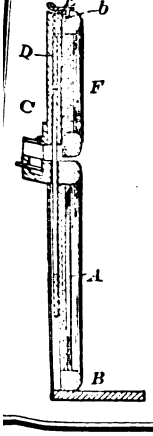

88078—W. M. Rumrill—*Churn.*

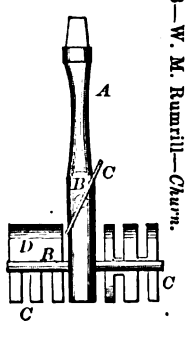

88079—S. C. Salisbury—*For Generating Gas and Heating Buildings.*

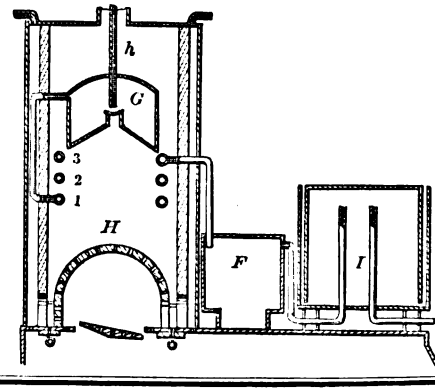

88080—S. C. Salisbury—*Steam Generator Furnace.*

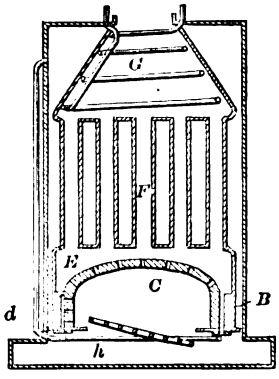

88081—S. C. Salisbury—*Steam Generator Furnace.*

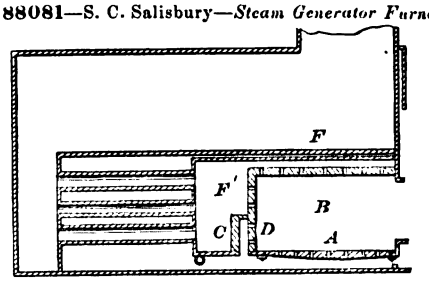

88082—S. C. Salisbury—*Reverberatory Furnace.*

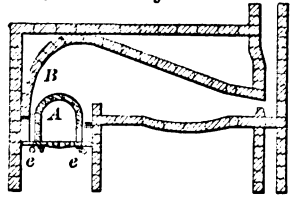

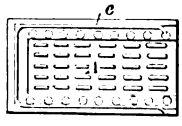

88084—S. C. Salisbury—*For Heating and Annealing Steel Ingots, &c.*

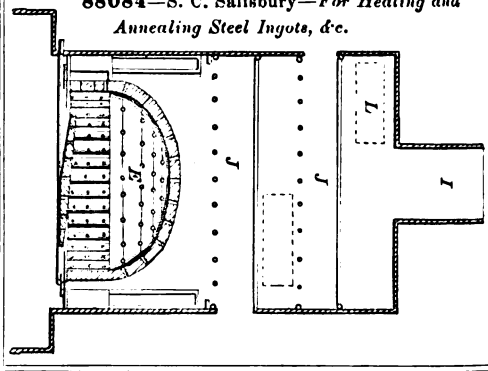

88083—S. C. Salisbury—*Furnace.*

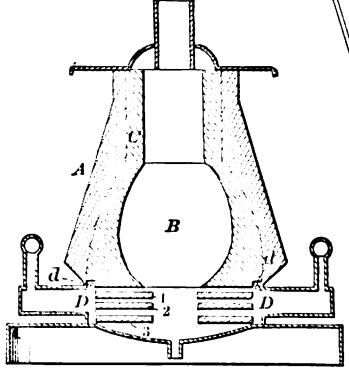

88088—I. Shaw—*Potato Digger.*

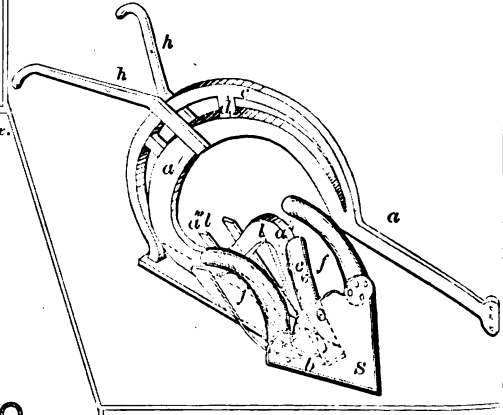

88085—J. E. Selden—*Telegraph Apparatus.*

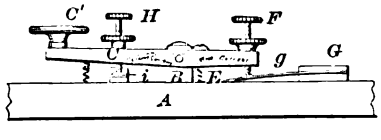

88086—Semple & Stephens—*For Polishing.*

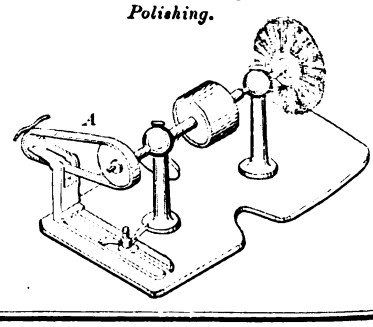

087—G. B. Shafer—*Grain Binder.*

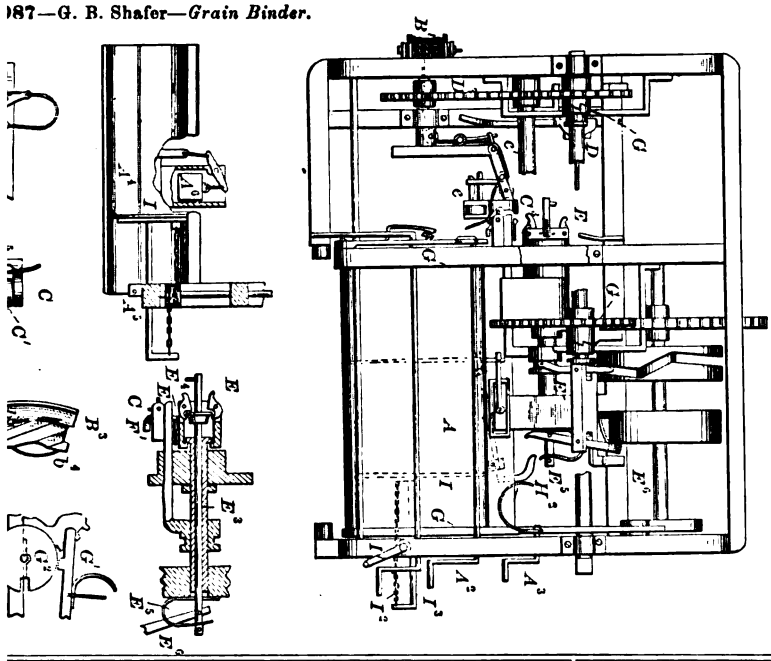

092—G. B. Stacy—*For Hackling Corn Husks.*

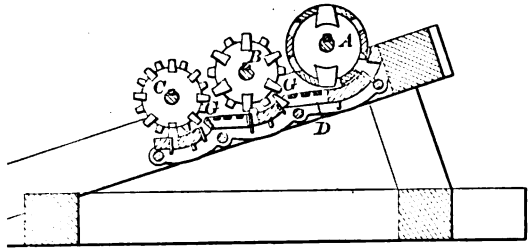

094—D. H. Stephens—*Rule Clamp.*

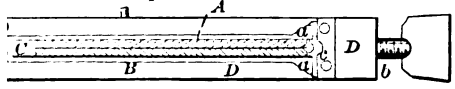

88091—H. A. Soliday—*For Harvesters.*

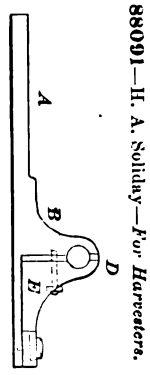

090—A. Skinner—*Fence.*

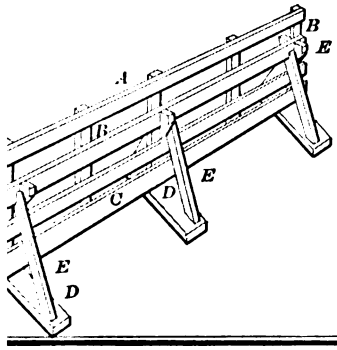

88089—J. P. Simmons—*Washing Machine.*

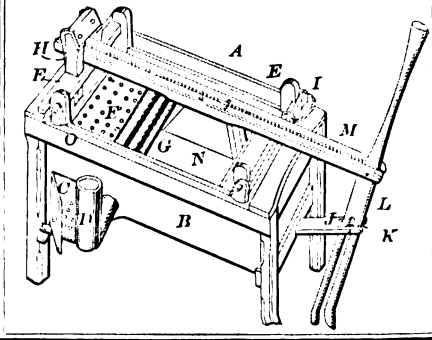

88093—Stannard & Perry—*For Turning Legs.*

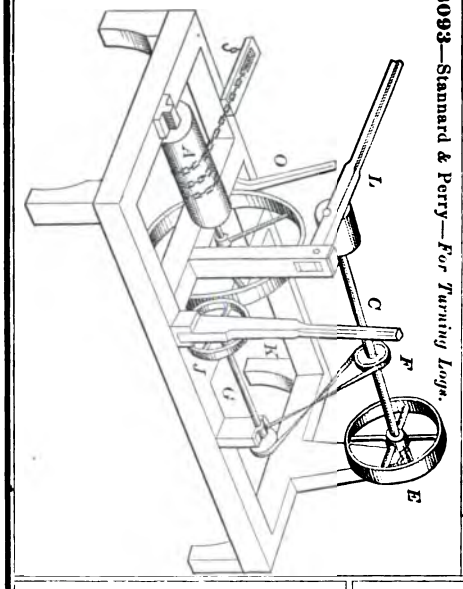

88095—J. H. Stephens—*Churn.*

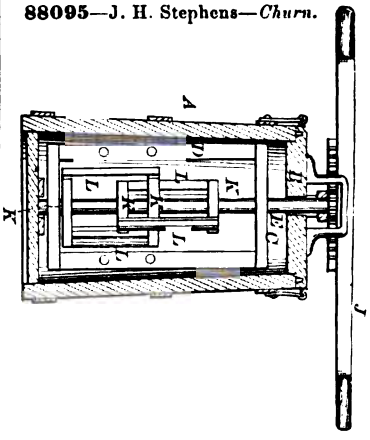

88096—J. C. Thayer—*Milk Cooler.*

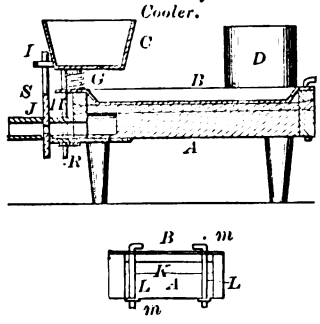

88097—C. N. Tyler—

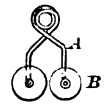

Clothes Pin.

88098—J. Van Duzer—*Double Cooler.*

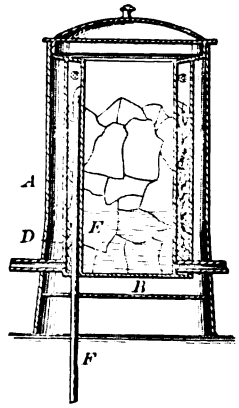

88099—W. W. Wade—*Button.*

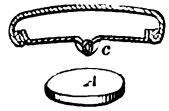

88100—W. B. Wadsworth—*Chain Manufacture.*

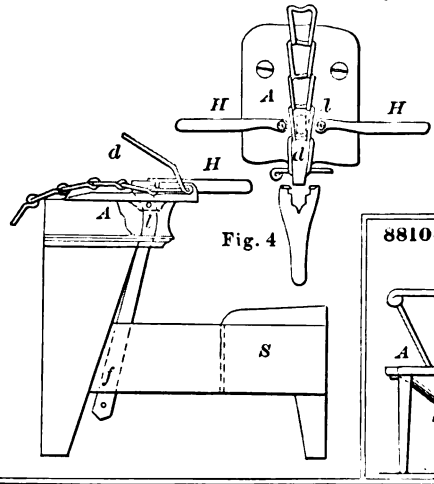

Fig. 4

88103—J. E. Watts—*Steam Trap.*

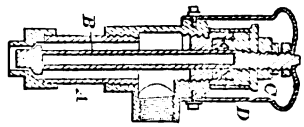

88104—G. Wells—*Conduit for Invalid Chairs.*

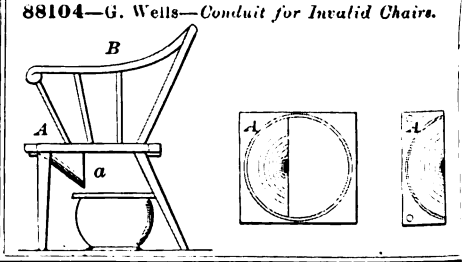

88105—H. Whitney—*Show Bottle.*

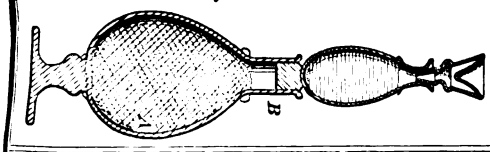

88106—C. Wiley—*Alarm Bell.*

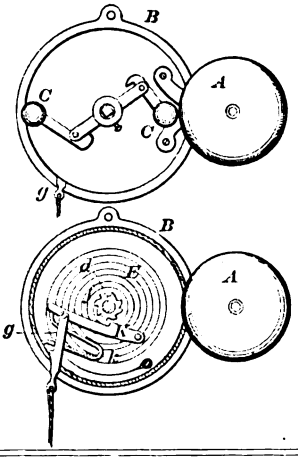

88108—Wolfgang & Kenreigh—*Gate.*

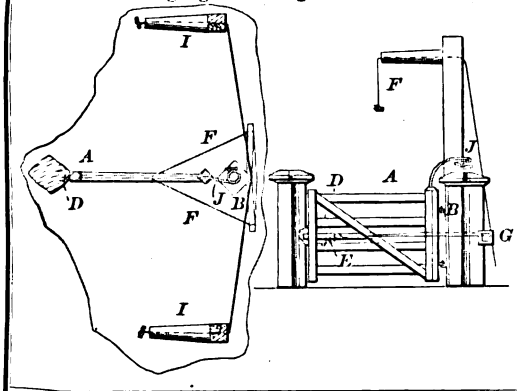

88107—D. Wilcox—*Hat.*

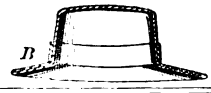

88109—J. Woodville—*Plane Guide.*

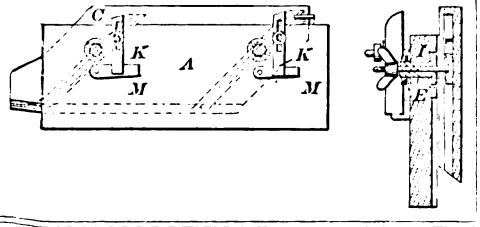

88110—J. Young—*Clothes Wringer.*

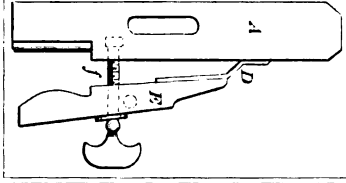

88111—W. Zeiger—*Potato Masher.*

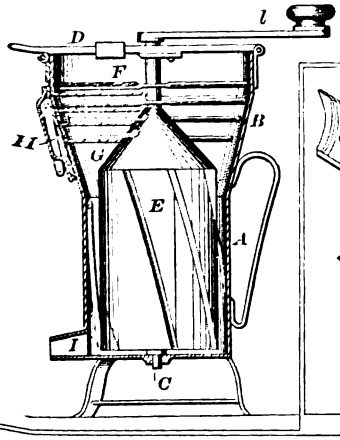

88112—J. J. Anderson—*Stove.*

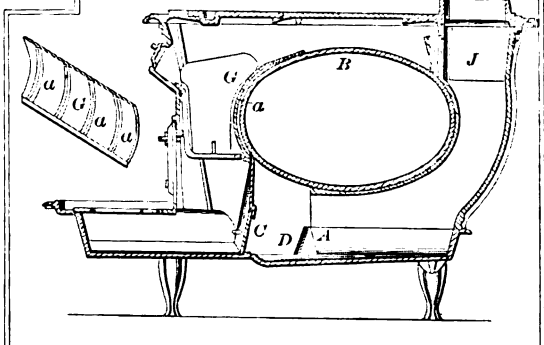

88113—W. H. Andrews—*Door Key.*

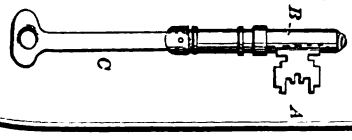

88116—J. P. Beatty—*Hat.*

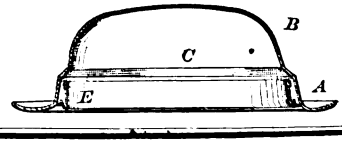

88114—I. B. Arthur—*Gig Saw.*

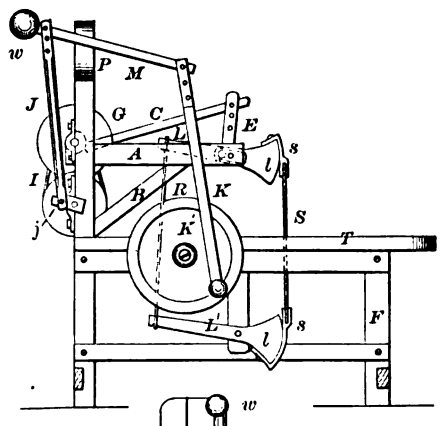

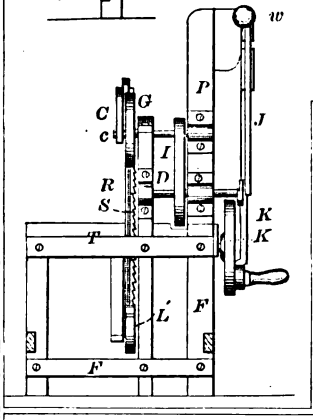

88120—J. B. Blair—*Velocipede.*

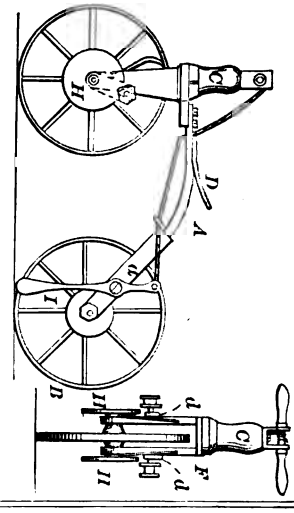

88117—E. U. Benedict—*Spring.*

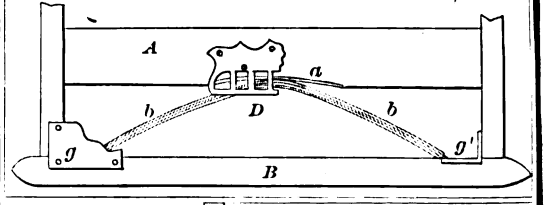

88115—I. Barrows—*Milking Stool.*

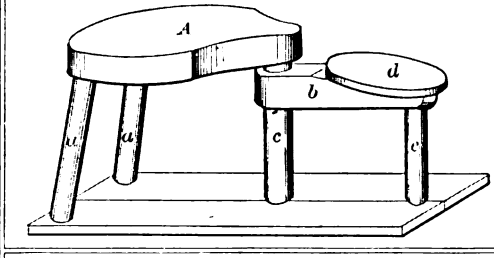

88118—S. S. Bent—*Poultry Coop.*

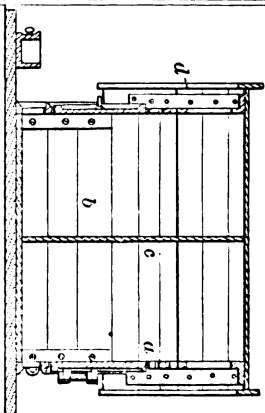

88121—J. Blake—*Table.*

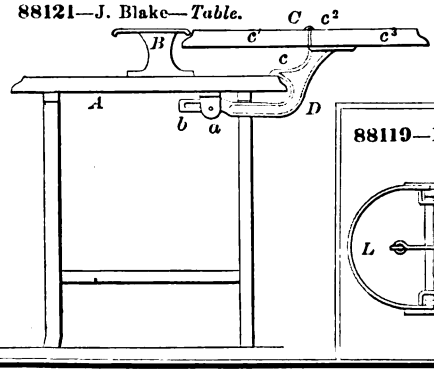

88119—Bigler & McCracken—*For Cleaning Stables.*

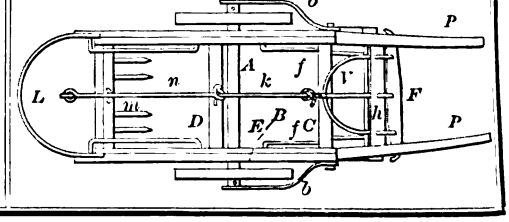

88122—Boileau & Mesnier—*Hinge.*

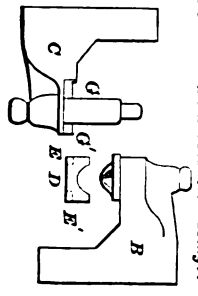

88123—R. H. Boughner—*Clothes Dryer.*

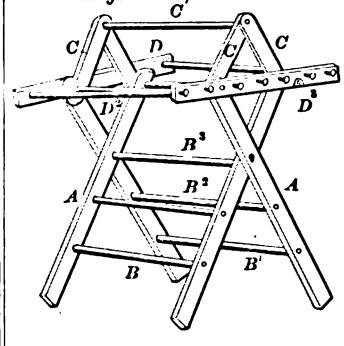

88124—J. H. Brookmire—*Elevating and Weighing Apparatus.*

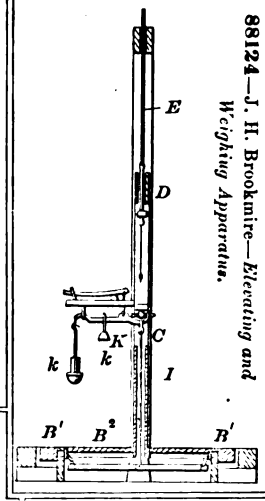

88125—G. W. Brown—*Swage.*

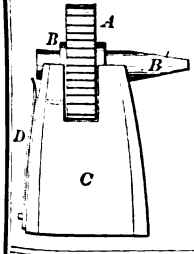

88126—C. N. Brumm—*Meat Chopper.*

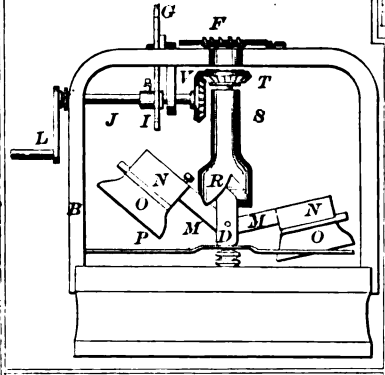

88127—R. I. Burbank—*Hay Rake.*

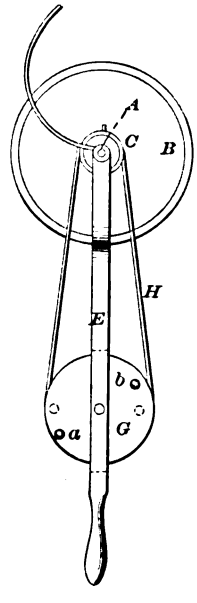

88129—L. O. Cameron—*Sash Lock and Bolt.*

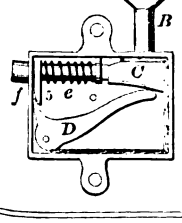

88130—Campion & Thomson—*Car Coupling.*

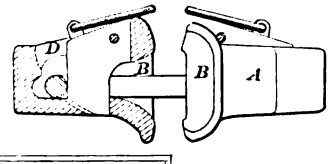

88128—R. Cadle—*Blacking Box.*

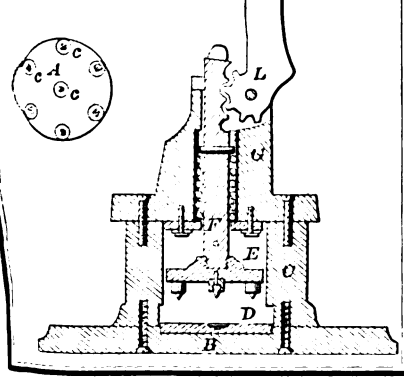

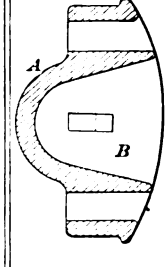

88131—M. F. Chandler—*Boot.*

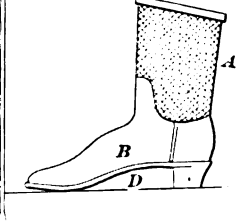

88132—G. Chelini—*Table.*

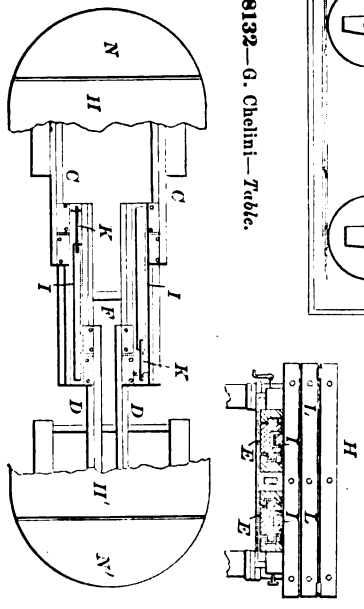

88135—J. L. Coburn—*Machine.*

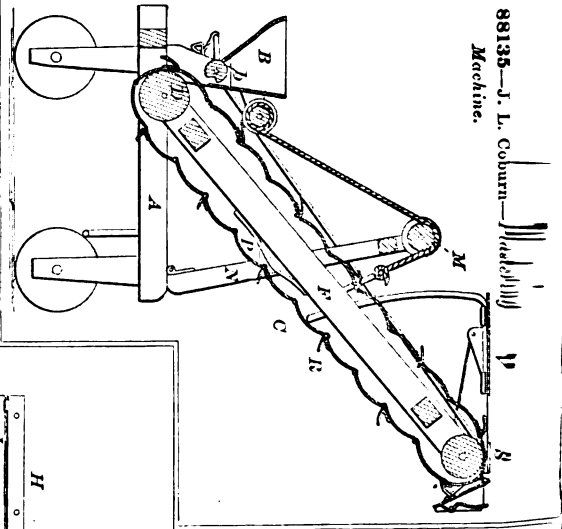

88133—A. B. Clemons—*Knob Latch.*

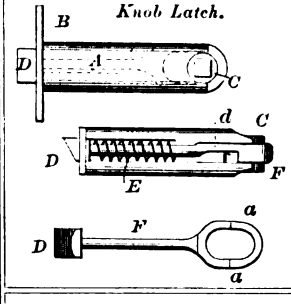

88139—J. P. Cranford—*Pavement.*

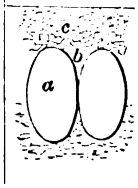

88137—J. Cornwell—*Bolt Feeder.*

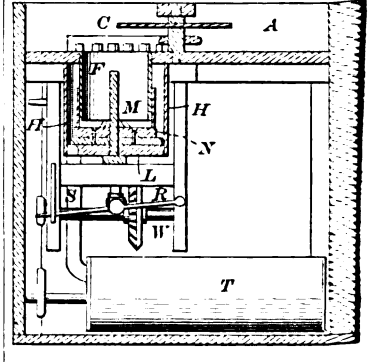

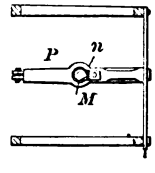

88138—W. Craine—*Scoop.*

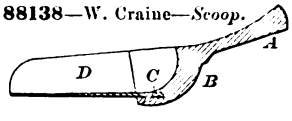

88136—A. Connelley—*Cultivator.*

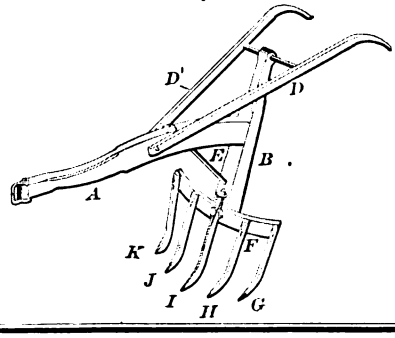

88140—G. C. Cranston—*For Destroying Insects.*

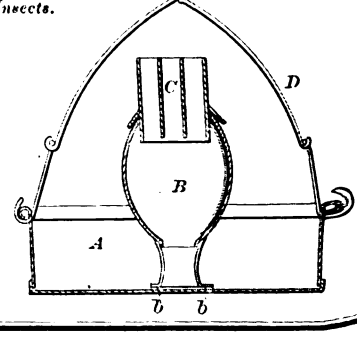

88141—S. B. Cushing—*For Piles.*

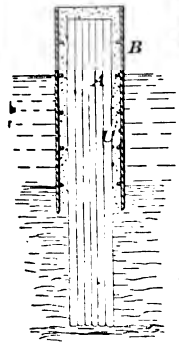

88143—D. C. Deyall—*Cutter for Tonguing and Grooving.*

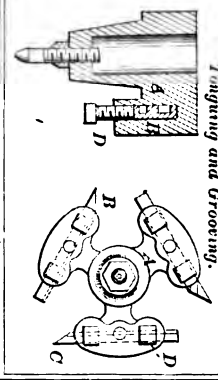

88145—W. F. Dodge—*Blind Wiring Machine.*

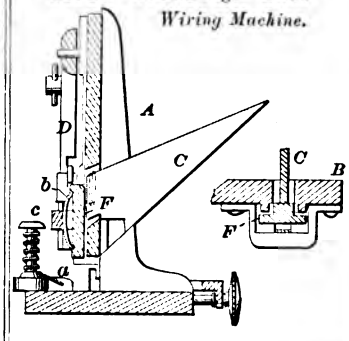

88144—P. Dismukes—*Clover Harvester.*

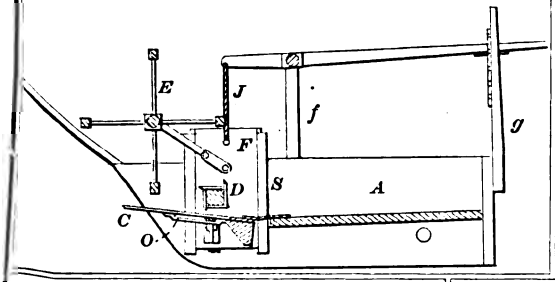

88146—J. Dourson—*Sofa Bedstead.*

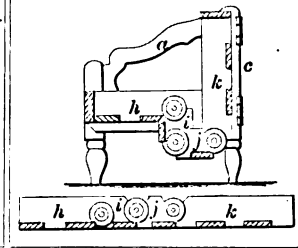

88149—H. F. Edwards—*Carriage Pole Attachment.*

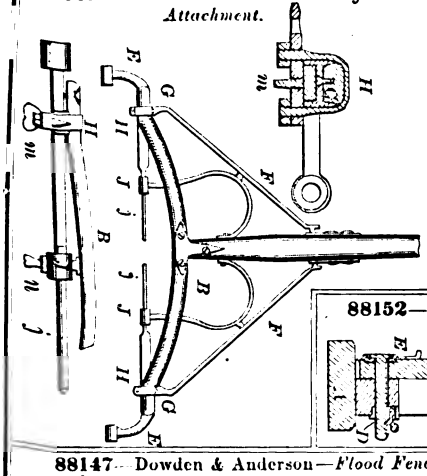

88148—S. D. Edgar—*Churn.*

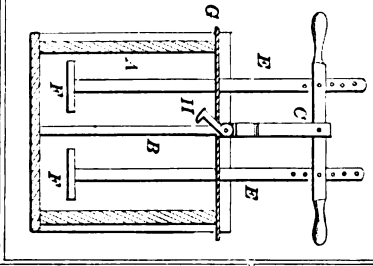

88152—W. C. Fisher—*Shutter Fastening.*

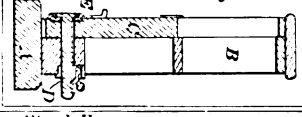

88150—J. Fahrney—*Mop Head.*

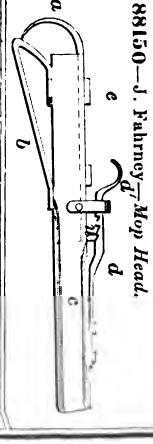

88147—Dowden & Anderson—*Flood Fence.*

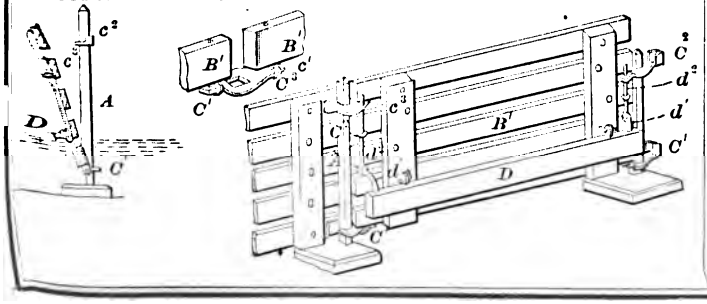

88166—R. Hill—*Clay Moulding Machine.*

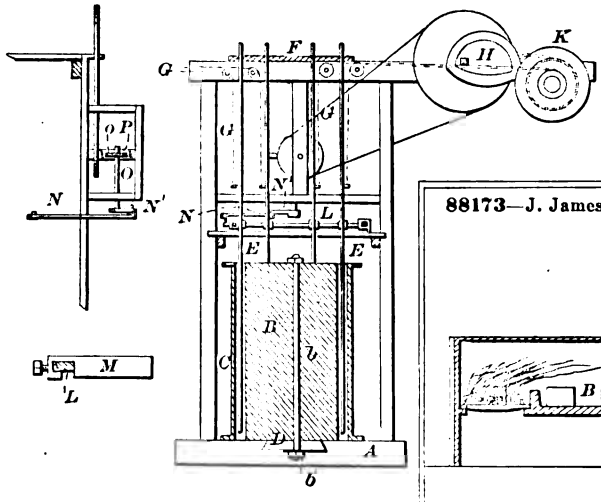

88173—J. Jameson—*For Iron and Steel.*

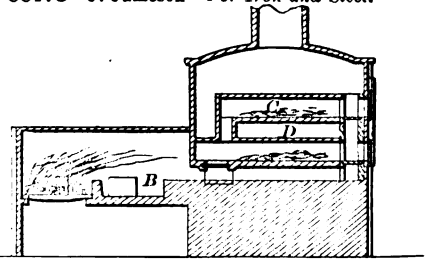

88172—P. N. Jacobus—*Shears.*

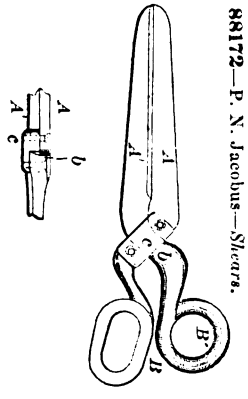

88174—C. C. Johnson—*Toy Hoop.*

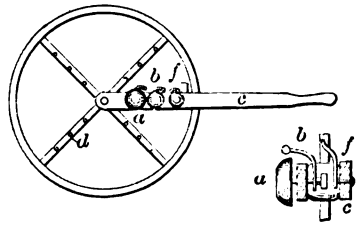

88108—J. Holtz—*Boiler Feeders.*

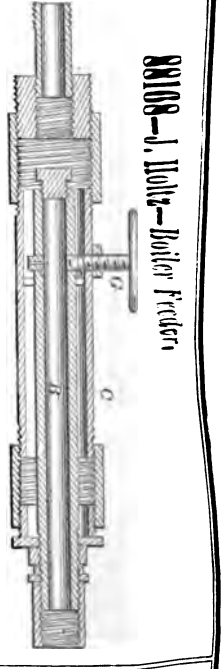

88175—Johnson, Smith & Ingersoll—*Clothes Line Fastener.*

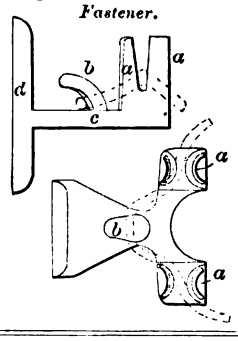

88170—P. H. Jackson—*Steering Apparatus.*

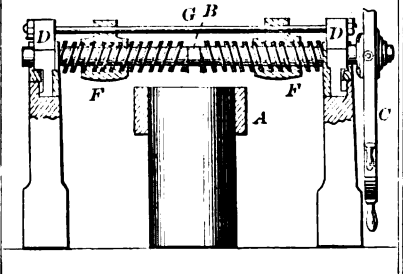

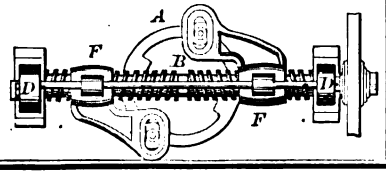

88177—N. Johnson—*Saw Swage.*

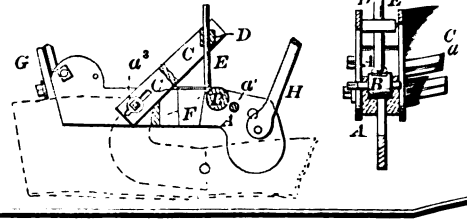

88160—C. O. Greene—*Stove.*

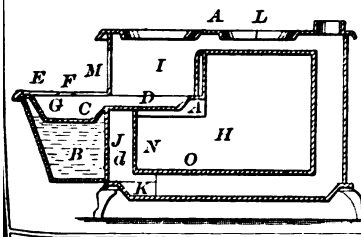

88161—J. D. Greene—*Fire Arm.*

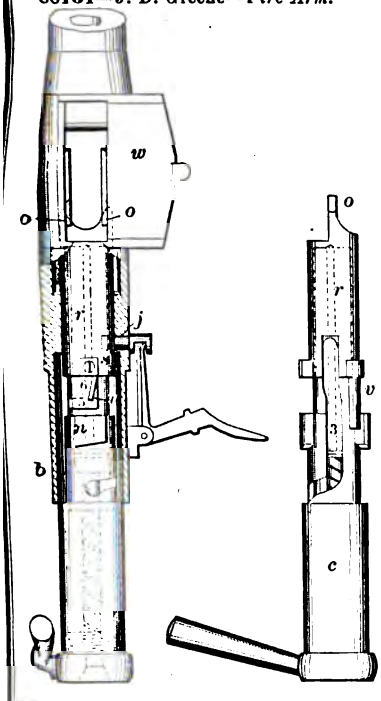

88162—C. F. Hadley—*Steam Valve.*

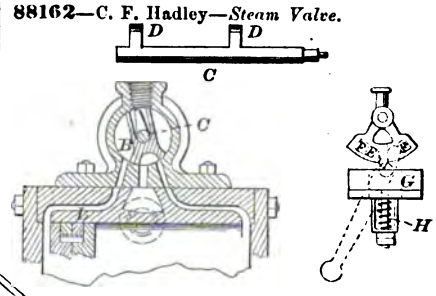

88163—C. F. Hadley—*For Converting Motion.*

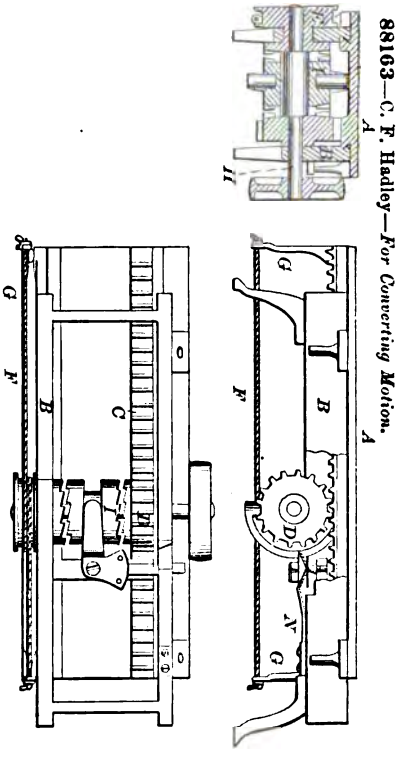

88164—J. W. Hansel—*Sash Holder.*

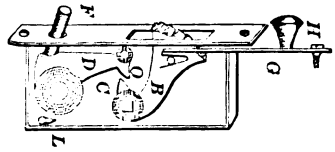

88165—A. B. Hendryx—*Paper Box.*

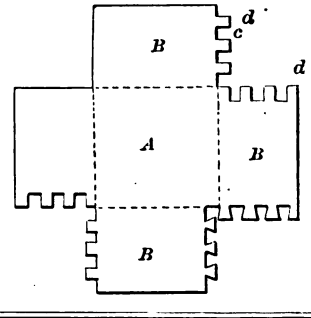

88167—D. Hodgkins—*Knife Scourer and Sharpener.*

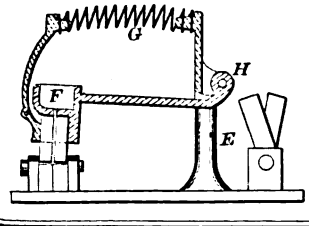

88185—H. W. & R. Lafferty—*Sugar Draining Machine*

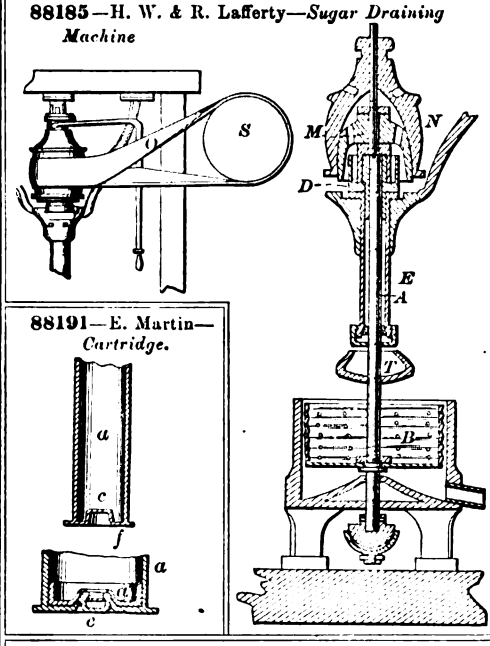

88188—T. Luke—*Carpet Cleaning Machine.*

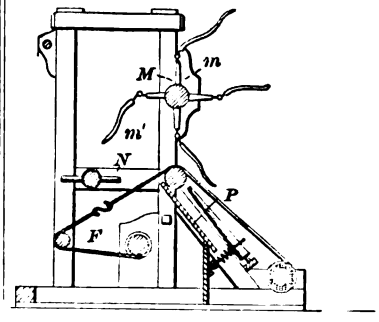

88191—E. Martin—*Cartridge.*

88190—Mace & Gwyer—*Refrigerator.*

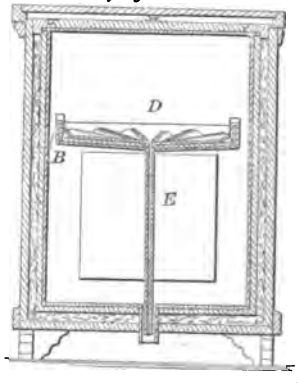

88189—I. V. & W. J Lynn—*Car Coupling.*

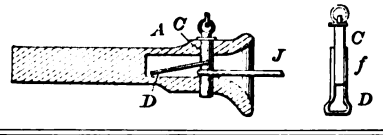

88187—M. Long—*Tellurium.*

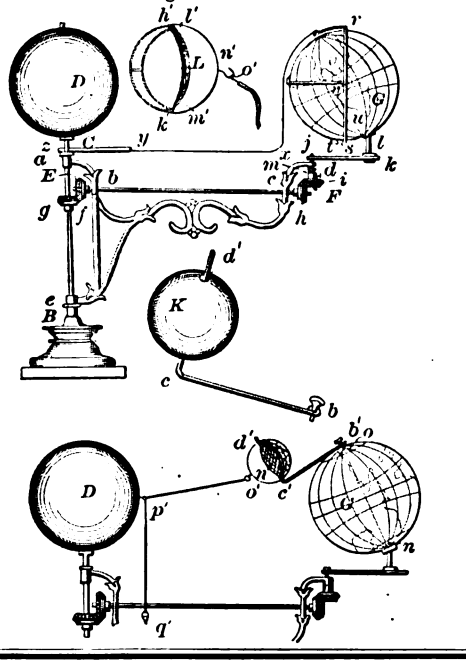

88192—J. H. Martin—*Breast Strap Slide.*

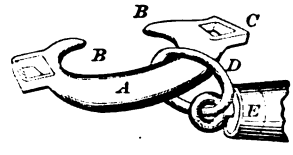

88193—A. McDaniel—*Wash Boiler.*

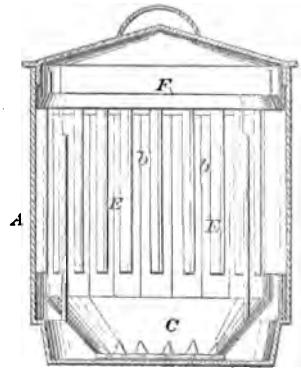

88176—N. Johnson—*Saw Gummer.*

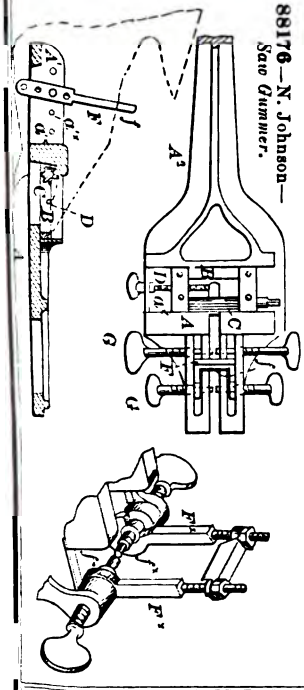

88178—W. J. Johnson—*Locomotive Drive Wheel.*

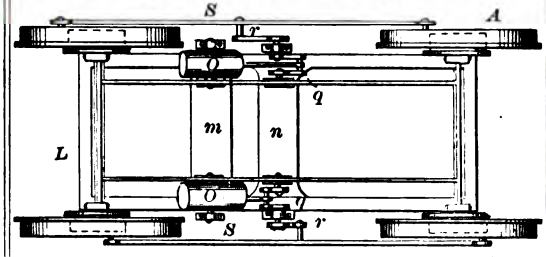

88186—Lincoln & Hubbard—*Door Button.*

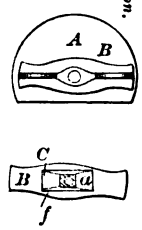

88183—Koontz, Potts & Lewis—*Car Heater.*

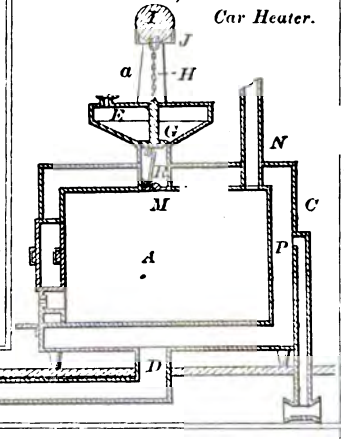

88181—J. J. Kelly—*Bridge.*

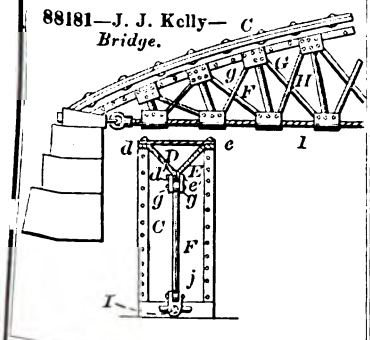

88184—H. W. & R. Lafferty—*Draining Machine.*

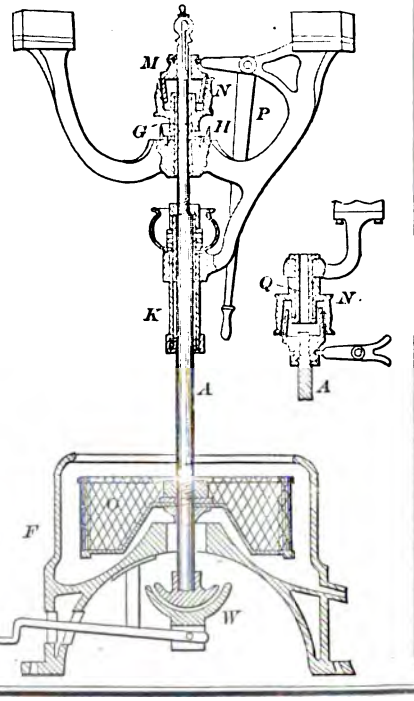

88179—H. L. Judd—*Curtain Fixture.*

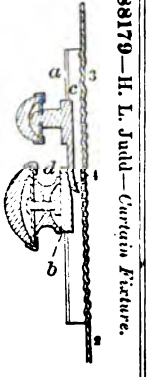

88180—A. N. Kellogg—*Block for Holding Stereotype Plates.*

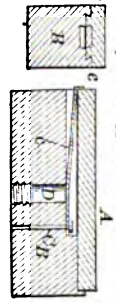

88185—H. W. & R. Lafferty—*Sugar Draining Machine*

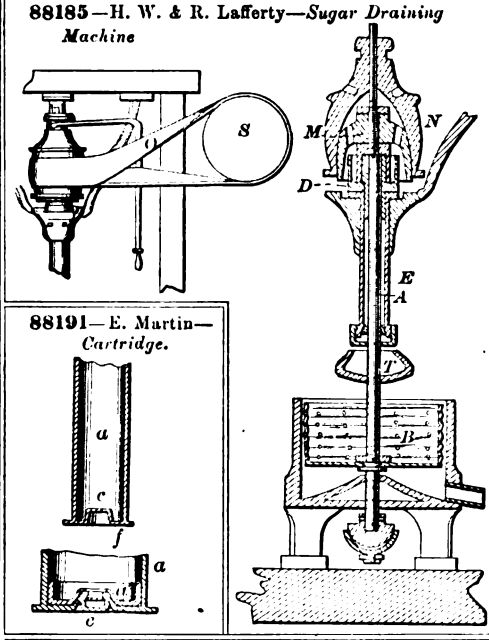

88188—T. Luke—*Carpet Cleaning Machine.*

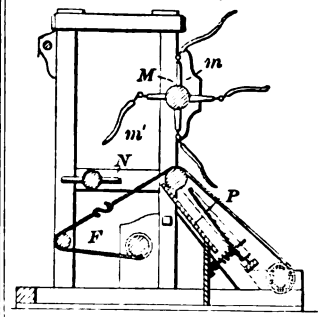

88191—E. Martin—*Cartridge.*

88190—Mace & Gwyer—*Refrigerator.*

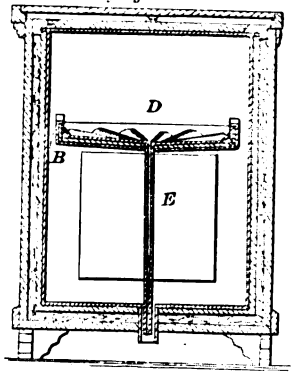

88189—I. V. & W. J Lynn—*Car Coupling.*

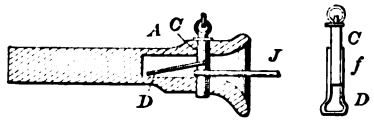

88187—M. Long—*Tellurium.*

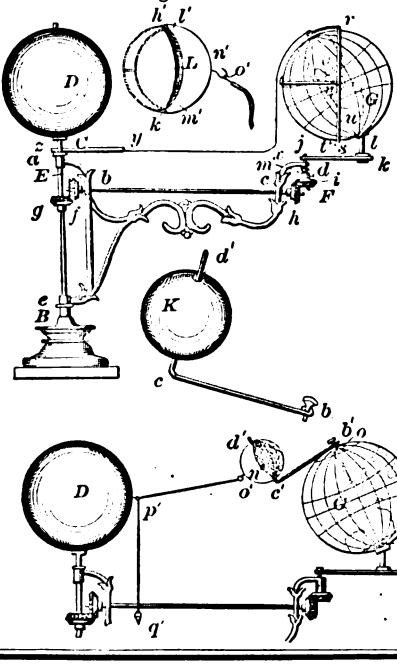

88192—J. H. Martin—*Breast Strap Slide.*

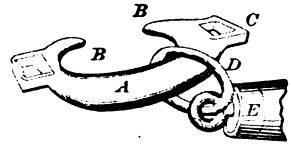

88193—A. McDaniel—*Wash Boiler.*

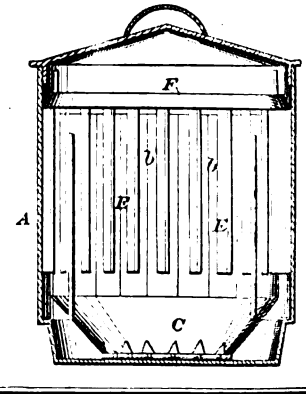

88194—J. W. McDonald—*Street Sweeper.*

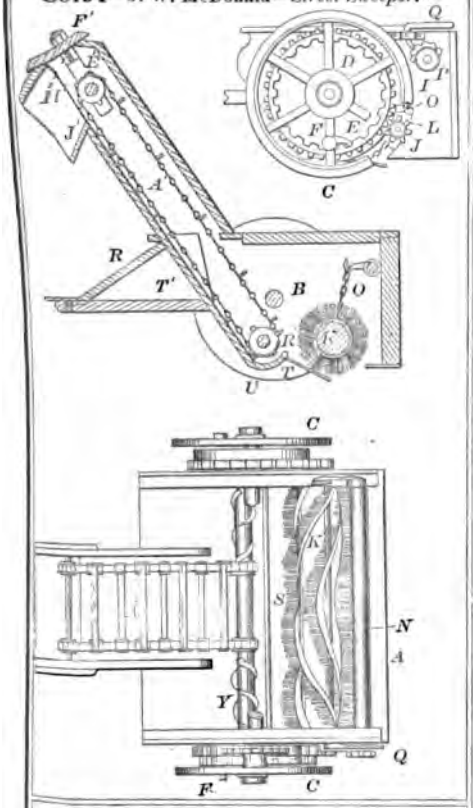

88195—S. Mendenhall—*Harrow.*

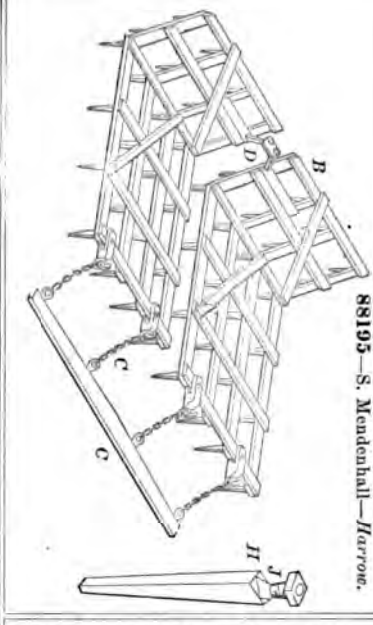

88196—W. Munson—*Fifth Wheel.*

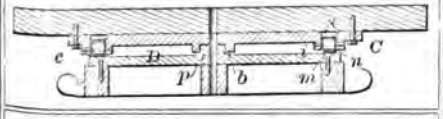

88197—A. W. Nicholson—*Walking Doll.*

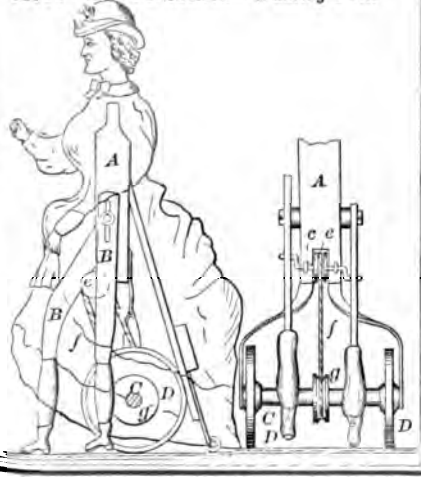

88198—W. L. Paine—*Velocipede.*

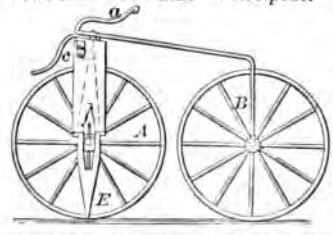

88199—C. Palmer—*Potato Digger.*

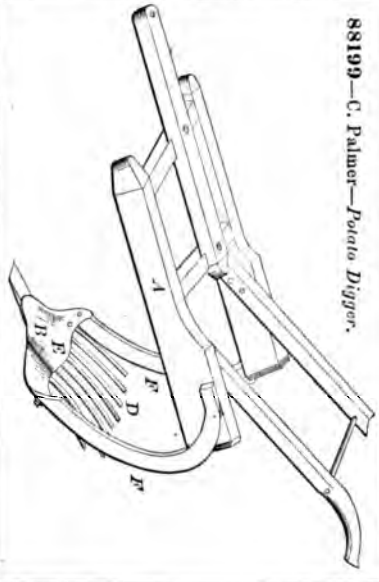

88200—I. B. Palmer—*Roller Stop for Window Shades.*

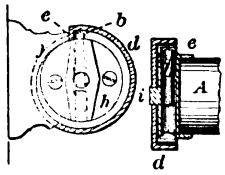

88201—F. D. Paradis—*Washing Machine.*

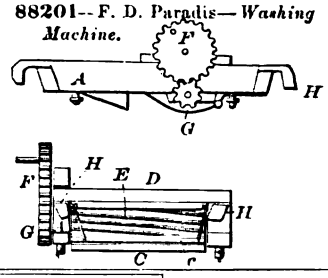

88202—W. F. Parker—*Cartridge.*

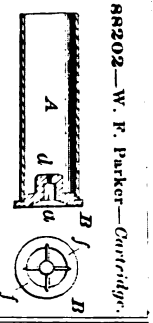

88203—Pease & Richards—*Lumber Measure.*

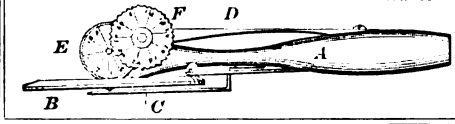

88204—H. F. Pease—*Operating Steam Engine Valves.*

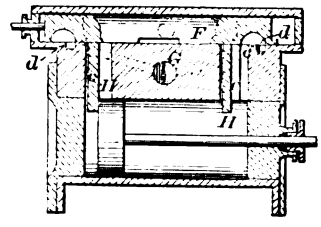

88205—R. H. Plass—*Velocipede.*

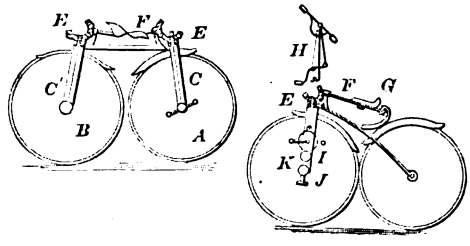

88210—J. V. Reardon—*Bridle.*

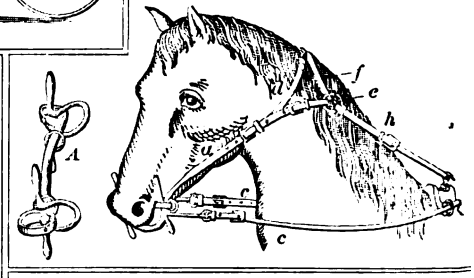

88209—A. Rank—*Harvester.*

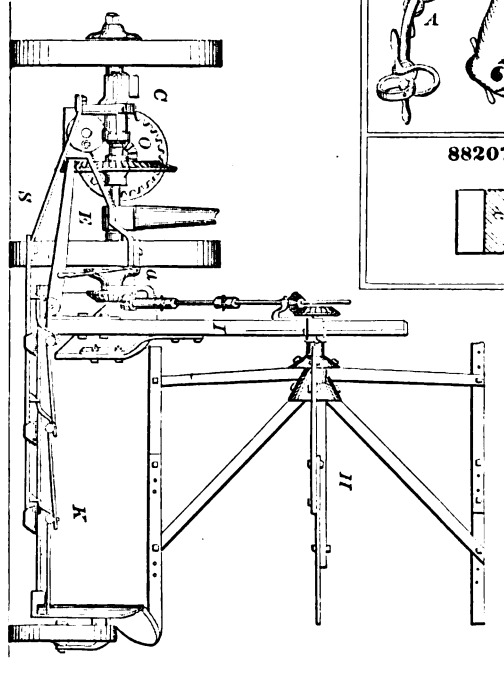

88207—Rae & Miller—*Railway Wheel.*

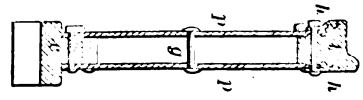

88206—J. T. Pope—*Lamp Shade Holder.*

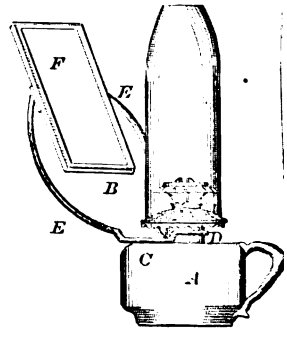

88229—L. R. Streeter—*Dentists' Flask.*

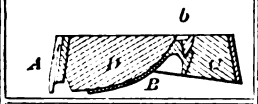

88230—G. C. Taft—*Wrench.*

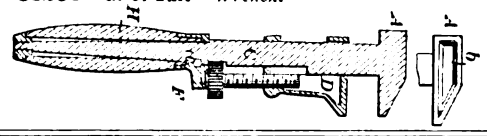

88231—E. Townsend—*For Shoe Pegs.*

88232—E. Townsend—*For Shoe Pegs.*

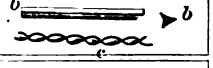

88233—A. J. Traver—*Plow.*

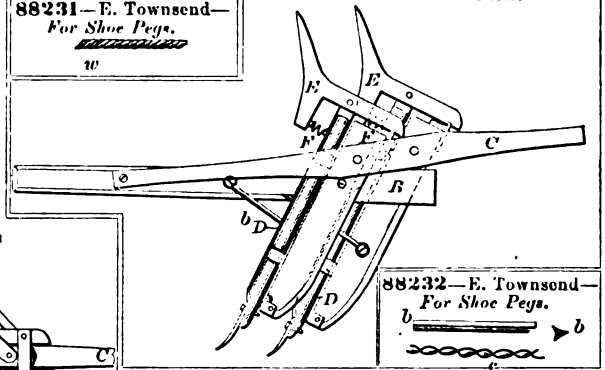

88234—G. W. Tucker—*Corn Marker.*

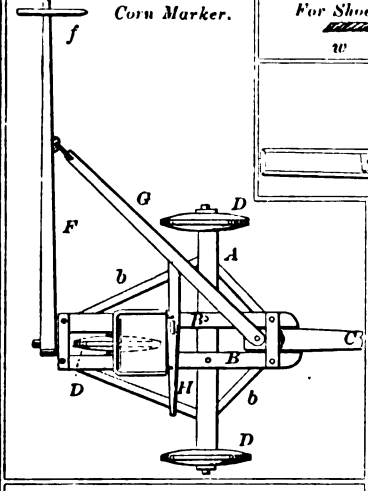

88235—G. W. Umbaugh—*Beehive.*

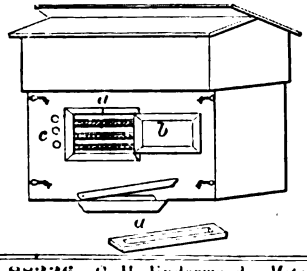

88236—C. H. Underwood—*Mitre Box.*

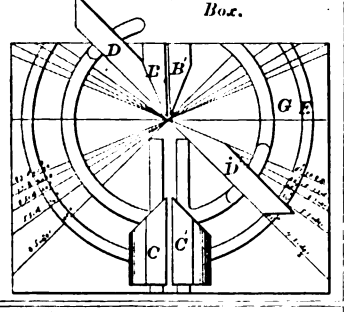

88237—O. Vallandigham—*Cigar Dryer.*

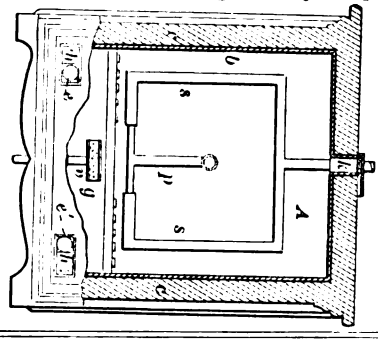

88238—W. Van Anden—*Velocipede.*

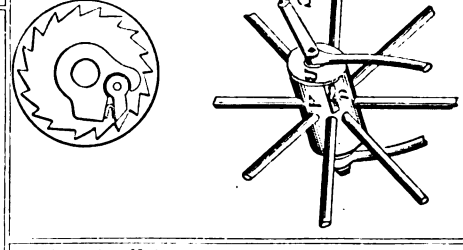

88239—J. Varley—*Neck Tie Retainer.*

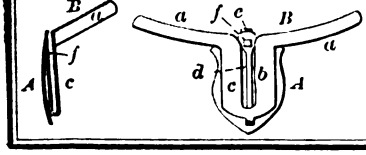

88240—Volkmann & Miller—*Carriage Axle.*

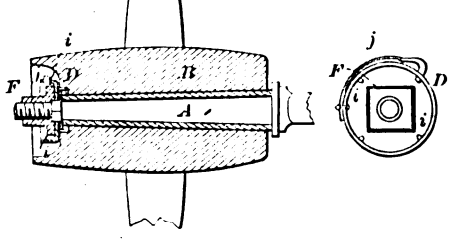

88220—
J. H. Seymour—
Water Closet.

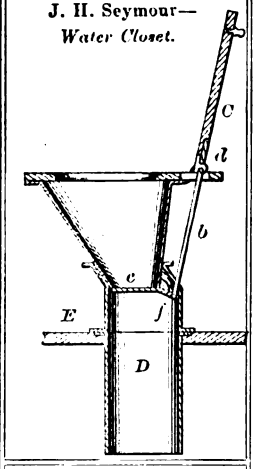

88222—Sim & Hutchinson—*For Extracting Oil.*

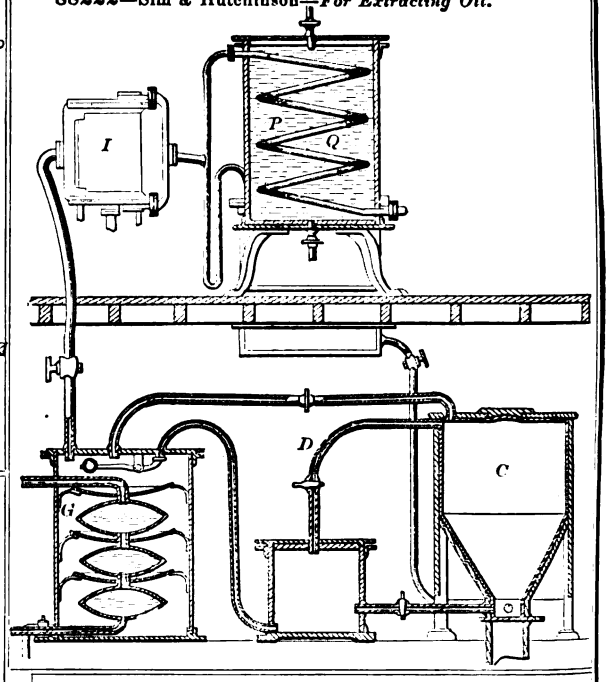

88226—Sperry & Hopson—*Churn Dasher.*

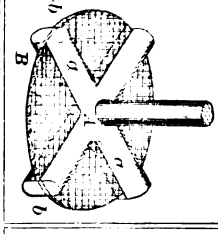

88225—Snowdin & Kent—*Harrow.*

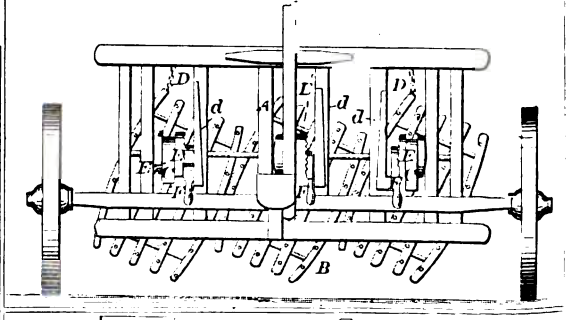

88221—G. Sickels—
Water Meter

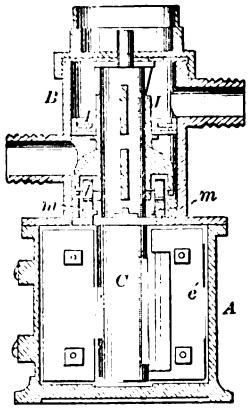

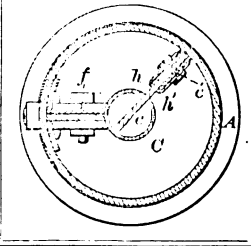

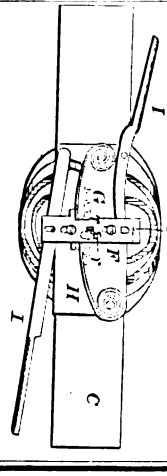

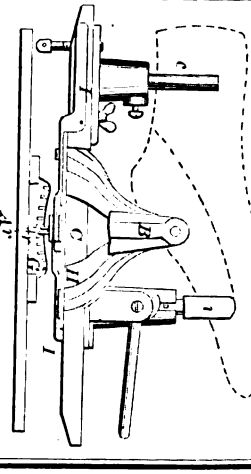

88227—M. J. Stein—*Leaf Holder.*

88229—L. R. Streeter—*Dentists' Flask.*

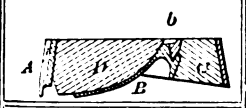

88230—G. C. Taft—*Wrench.*

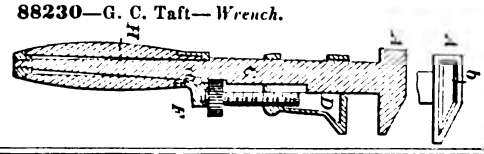

88231—E. Townsend—*For Shoe Pegs.*

88232—E. Townsend—*For Shoe Pegs.*

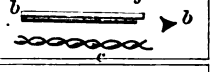

88233—A. J. Traver—*Plow.*

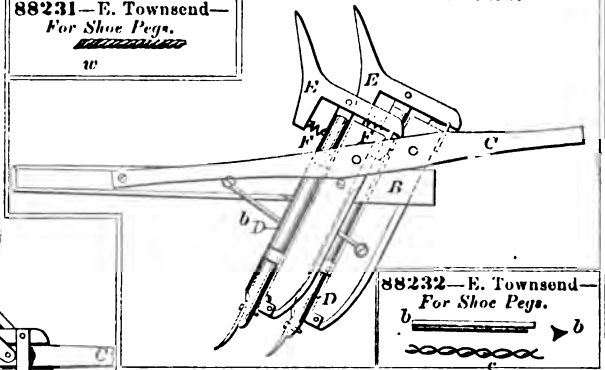

88234—G. W. Tucker—*Corn Marker.*

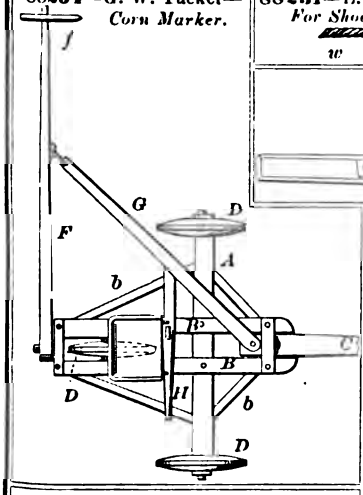

88235—G. W. Umbaugh—*Beehive.*

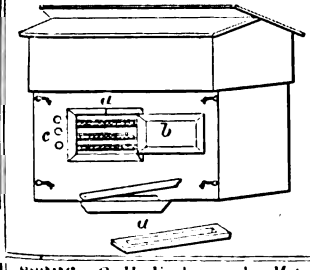

88236—C. H. Underwood—*Mitre Box.*

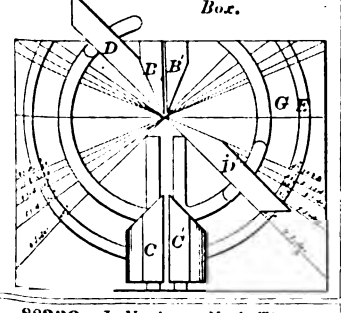

88237—O. Vallandigham—*Cigar Dryer.*

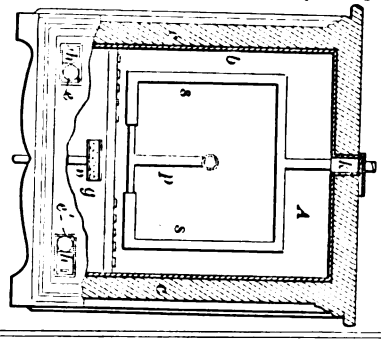

88238—W. Van Anden—*Velocipede.*

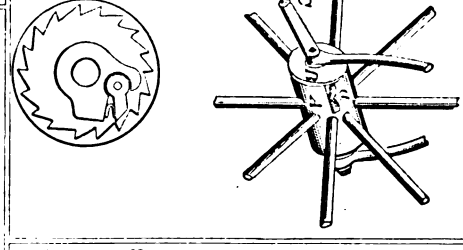

88239—J. Varley—*Neck Tie Retainer.*

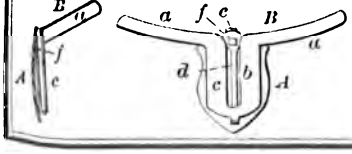

88240—Volkmann & Miller—*Carriage Axle.*

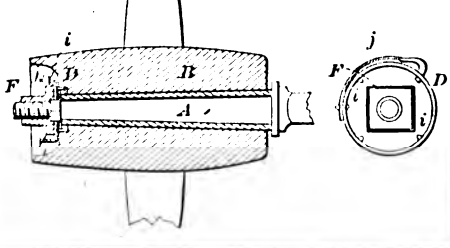

88241—W. W. Wait—*Fanning Mill.*

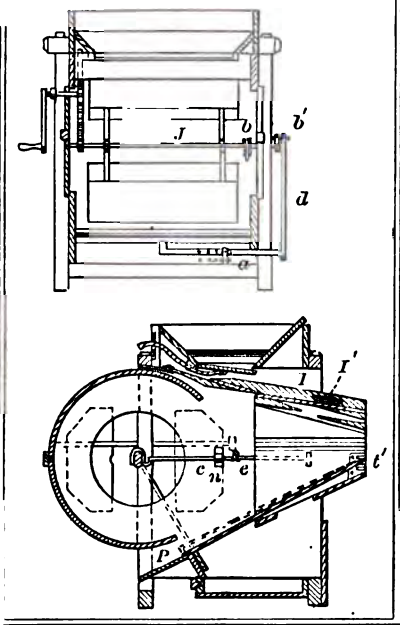

88244—J. P. Ware—*Corn Planter.*

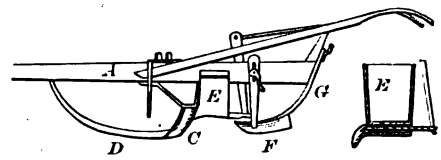

88242—L. Wakefield—*Axle Box.*

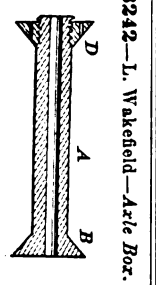

88243—S. J. Wallace—*Wash Boiler.*

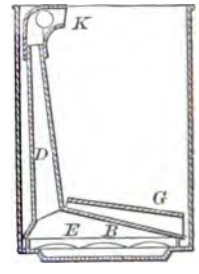

88246—T. B. Webster—*Boiler Feeder.*

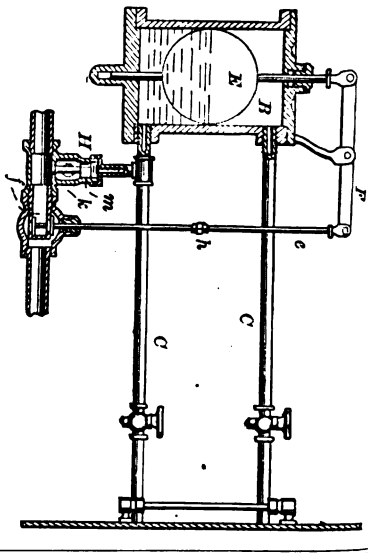

88245—W. Webb—*Chuck.*

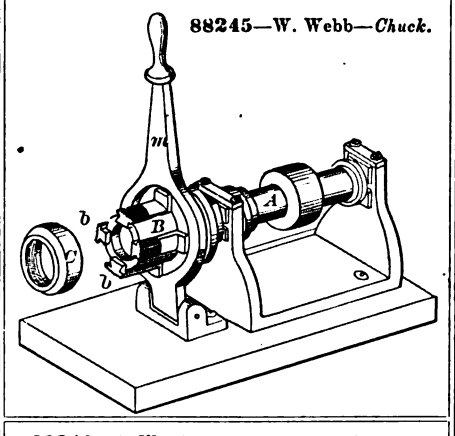

88248—C. Westbrook—*Telegraph Apparatus.*

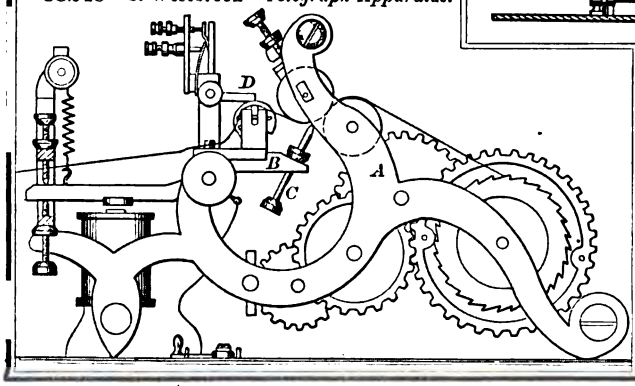

88247—H. Wells—*Spinning Machine.*

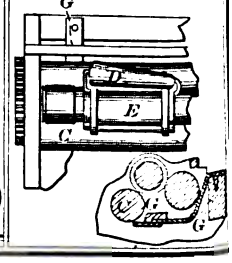

88249—S. P. Williams—*Gate.*

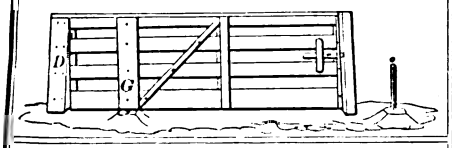

88250—W. L. Williams—*For Splitting Wood.*

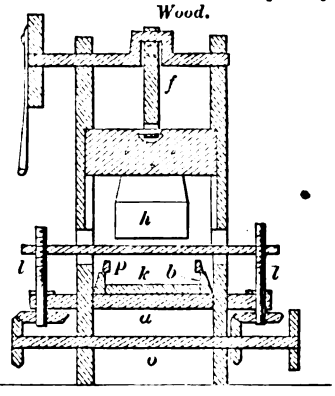

88251—G. W. Williamson—*Dish and Clothes Washer.*

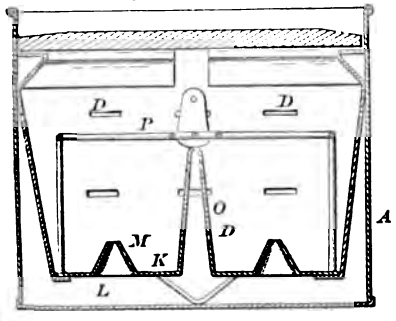

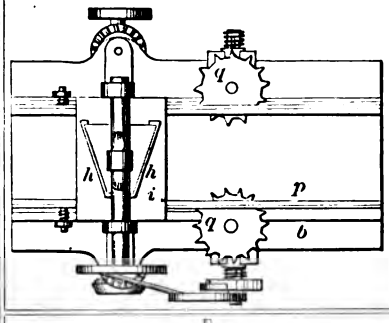

88252—Youkey & Rawson—*Fence.*

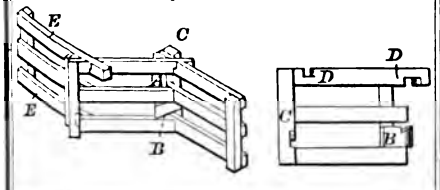

88253—M. Woodard—*Sower and Cultivator.*

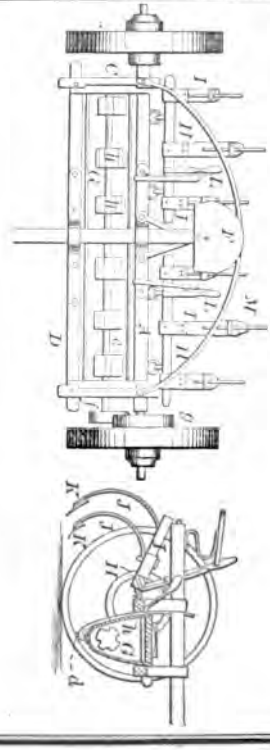

88255—W. Zimmerman—*Table.*

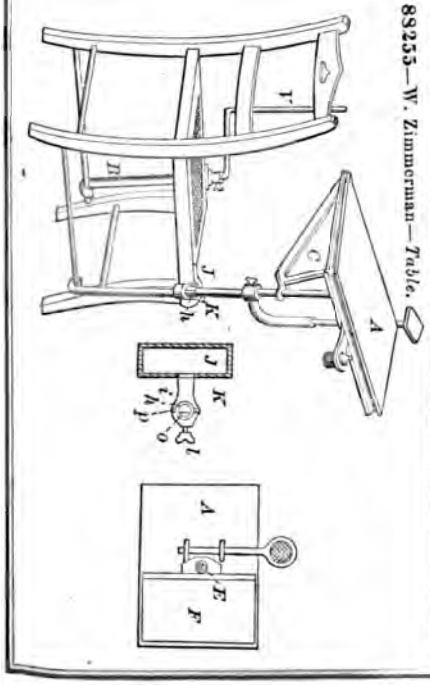

88254—G. W. N. Yost—*Harvester.*

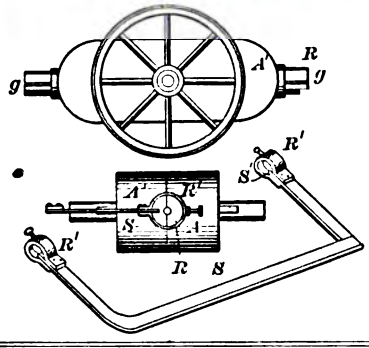

88256—F. W. Bacon—*Easel.*

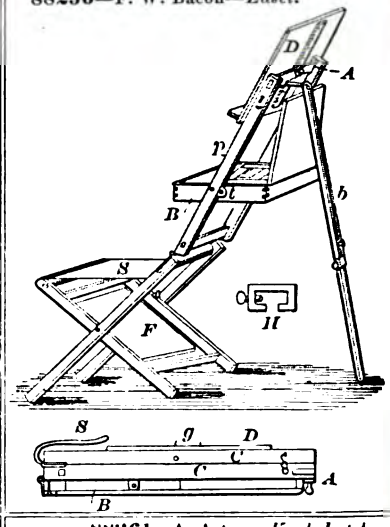

88257—C. F. Hargis—*For Winding Cloth*

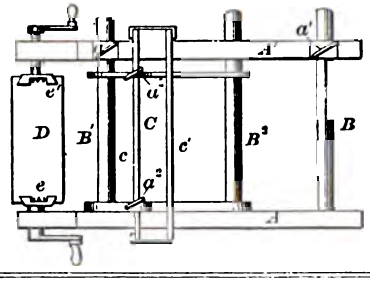

88261—A. Aston—*Knob Latch.*

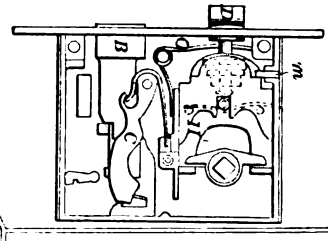

88262—E. A. Bagley—*Screw Machine.*

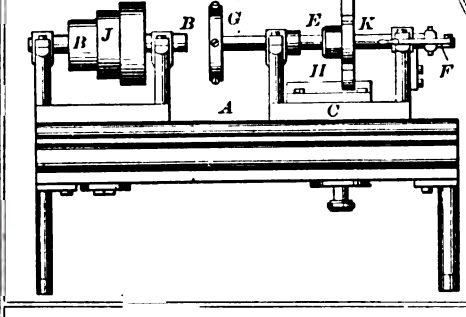

88264—C. P. Bigelow—*Edge Plane.*

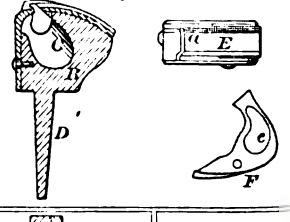

88259—J. H. Shedd—*Liquid Meter.*

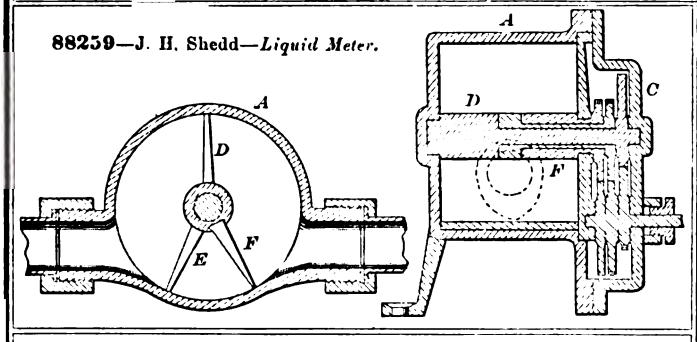

88265—D. Bly—*Mucilage Brush.*

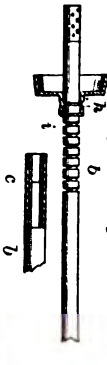

88263—D. Belcher—*For Connecting Horses to Vehicles.*

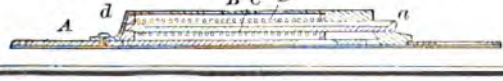

88266—J. Brinkerhoff—*Washing Machine.*

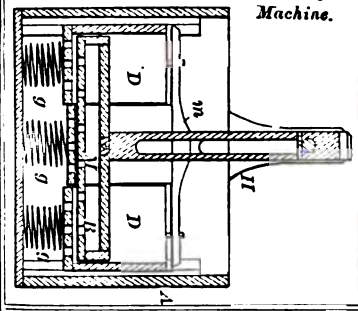

88267—F. H. Brinkkotter—*For Fitting Felloes to Wheels.*

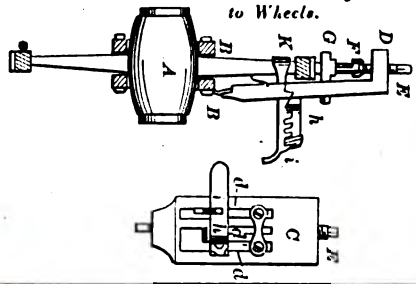

88268—W. M. Brisben—*Bobbin.*

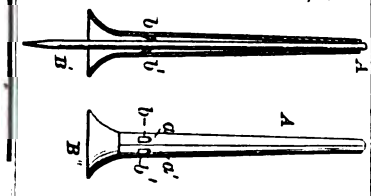

88270—H. M. Burdick—*Hay Spreader.*

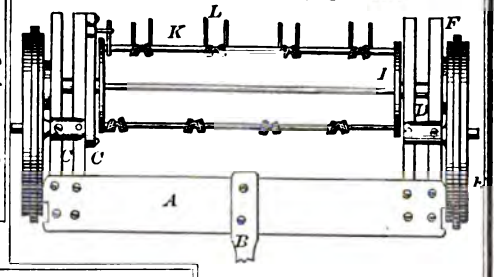

88272—T. M. Bush—*Cistern Top.*

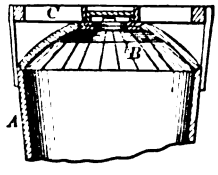

88269—T. Bullivant—*Last.*

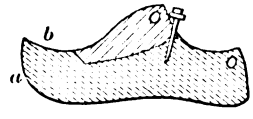

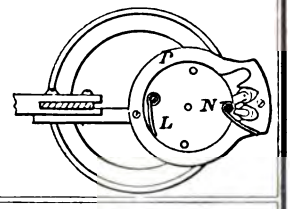

88274—C. Chambers, Jr.—*Car for Brick Dryers.*

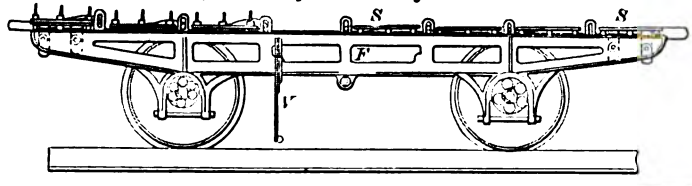

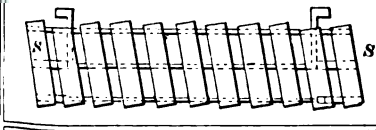

88271—G. Burkhardt—*Tinkers' Pot.*

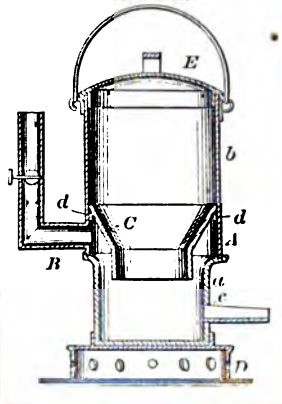

88276—J. H. Cole—*For Seam Finishing.*

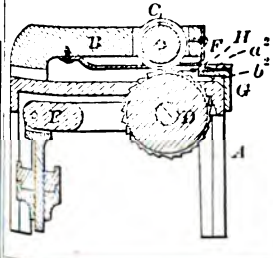

88273—Cahoone & Brown—*Breast Pin Fastening.*

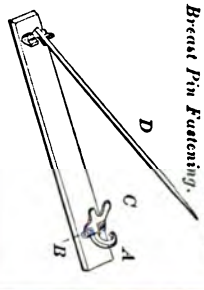

88275—J. H. Chapman—*Cultivator.*

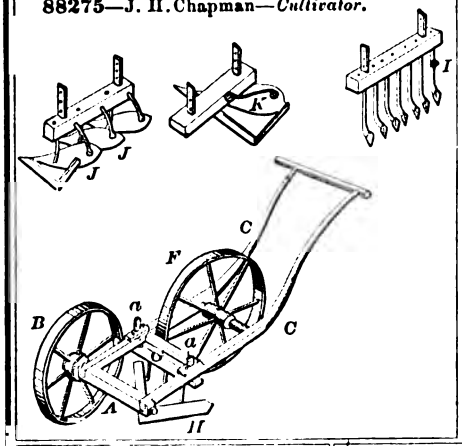

88277—J. Craig—*Dumping Wagon.*

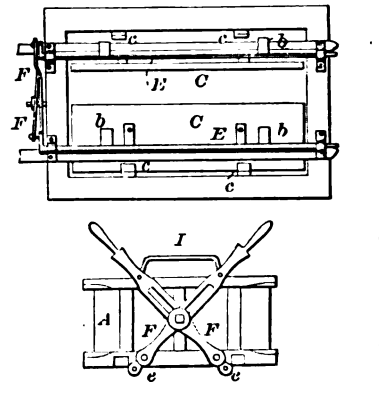

88278—A. C. Crary—*Steam Engine.*

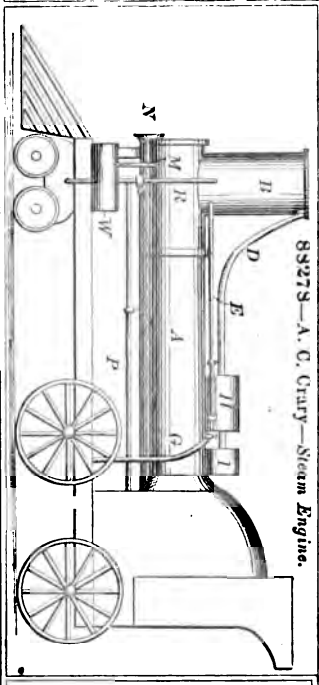

88280—A. Davison—*Gang Plow.*

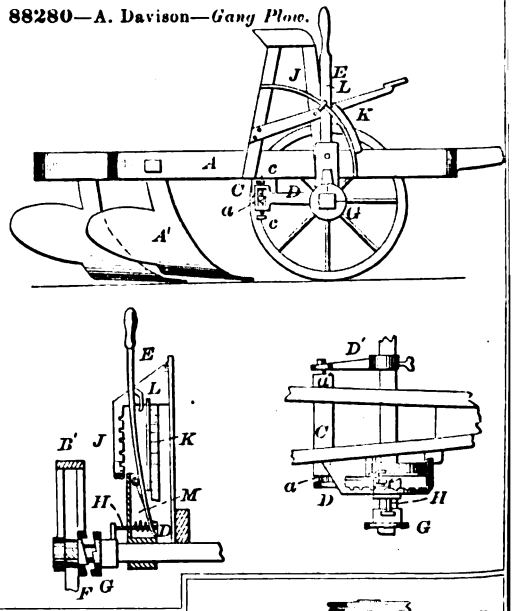

88279—M. C. Cronk—*Clamp Bar.*

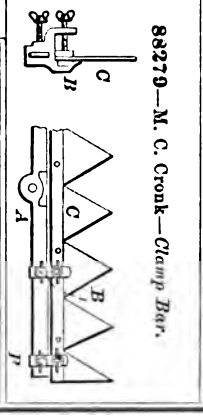

88281—H. T. De Montigny—*Ironing Table.*

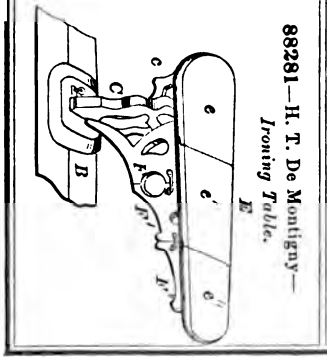

88282—C. F. Dunbar—*Sewing Machine.*

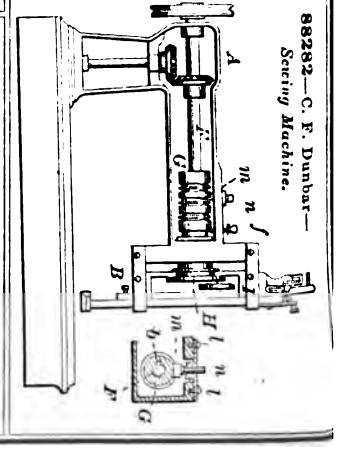

88283—G. D. Edmunds—*Channeling Tool.*

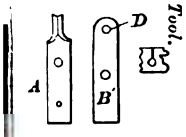

88284—M. B. Edson—*Railway Track.*

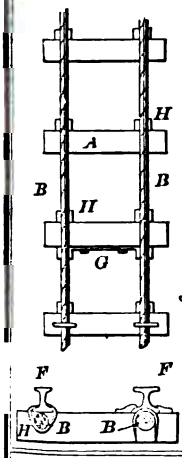

88285—M. G. Farmer—*Application of an Electrical Current to Steam Boilers.*

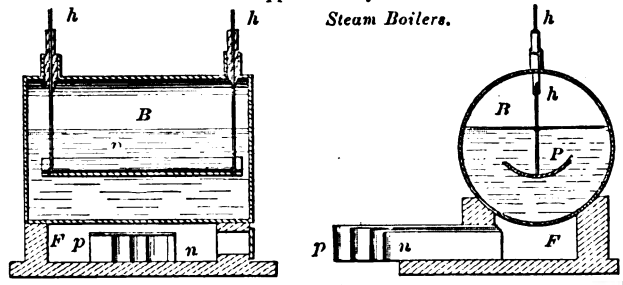

88288—A. C. Fletcher—*Steam Generator.*

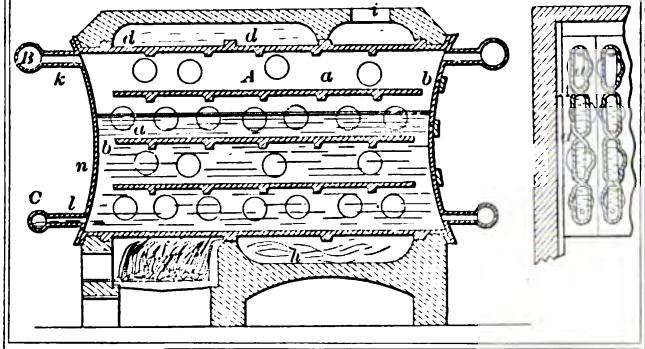

88289—J. Geiger—*Churn.*

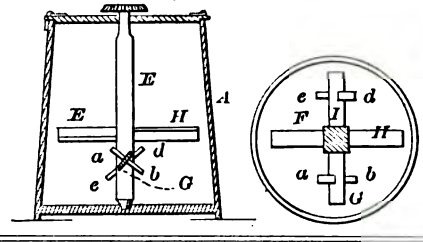

88286—A. Farrar—*Velocipede.*

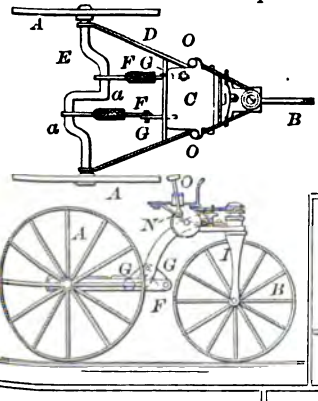

88290—G. F. Green—*Tooth Mallet.*

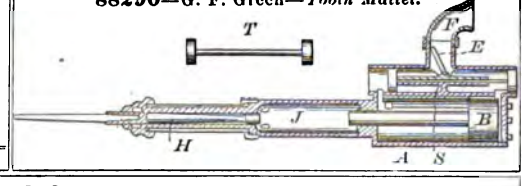

88287—L. Fischer—*Vapor Burner.*

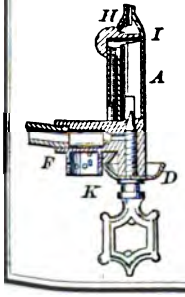

88292—O. L. Hart—*Water Wheel.*

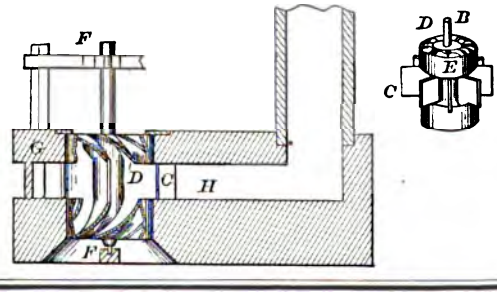

88293—D. Healy—*Wagon Brake.*

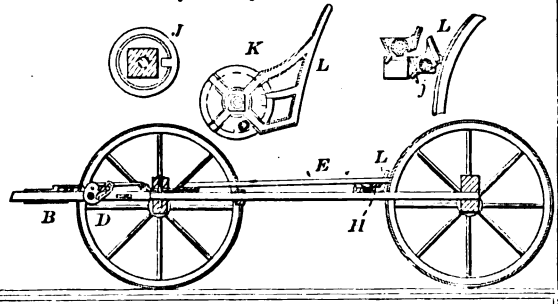

88294—I. V. Holmes—*Metallic Studding.*

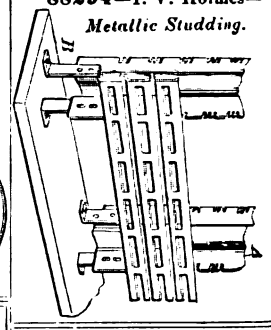

88295—J. R. Hopper—*Potato Digger.*

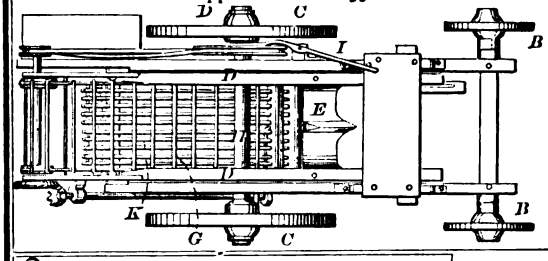

88296—Hughes Shaffer & Thompson—*Fruit Jar.*

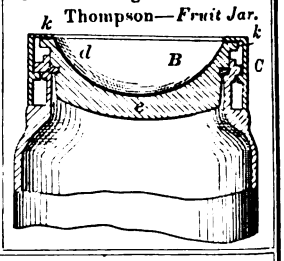

88297—G. Hunzinger—*Chair.*

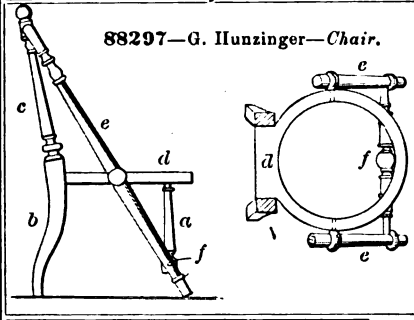

88299—J. Jameson—*For Making Iron and Steel.*

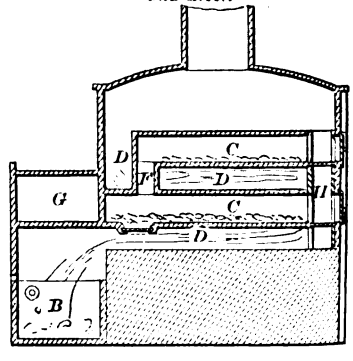

88298—G. Inwood—*For Securing Bed Clothes.*

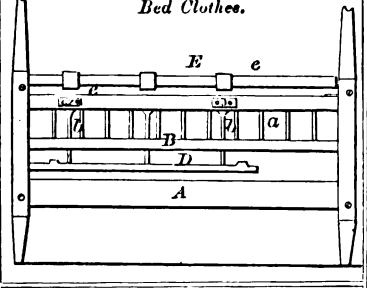

88302—Johnson & Stiles—*Railway Switch.*

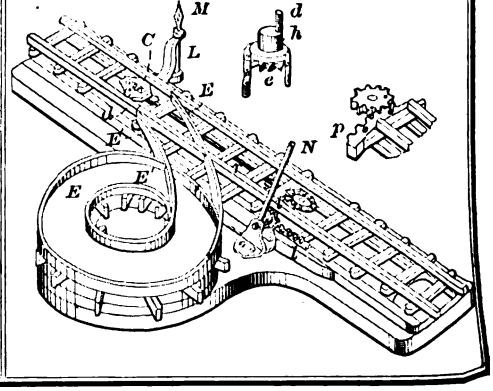

88301—J. D. Johnson—*Harrow.*

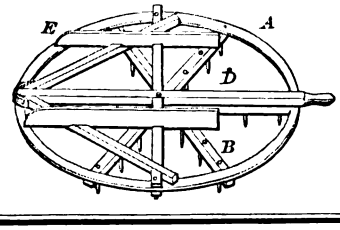

88303—W. R. Johnson—*Stump Extractor.*

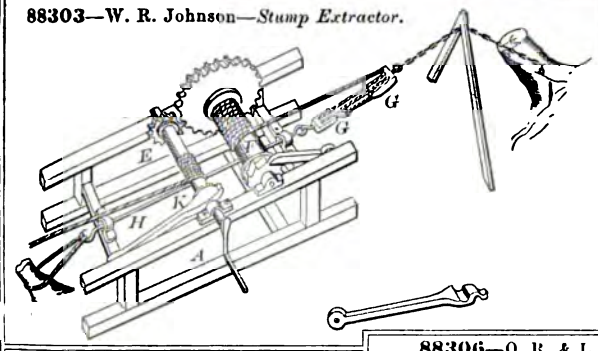

88304—J. Jorey—*Horse Shoe.*

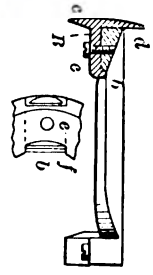

88305—J. M. Keep—*Toy.*

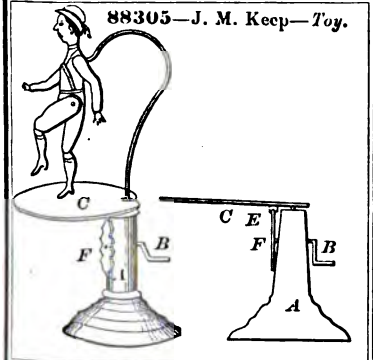

88306—O. R. & L. C. Kendall—*Clapboard Machine.*

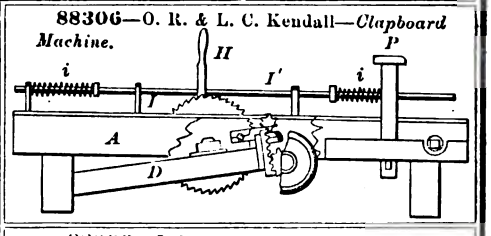

88307—Koeb & Houcke—*Belt Fastening.*

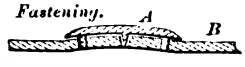

88309—J. Lane—*Plow Coulter.*

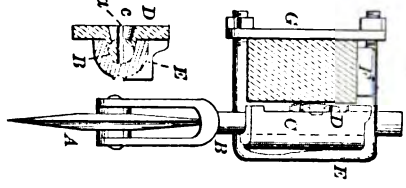

88308—J. Lamb—*Washing and Wringing Machine.*

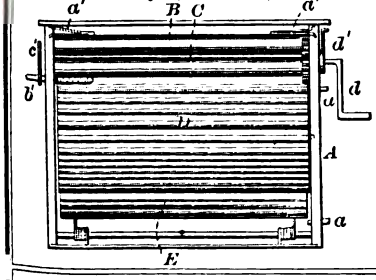

88311—J. R. Little—*Cultivator.*

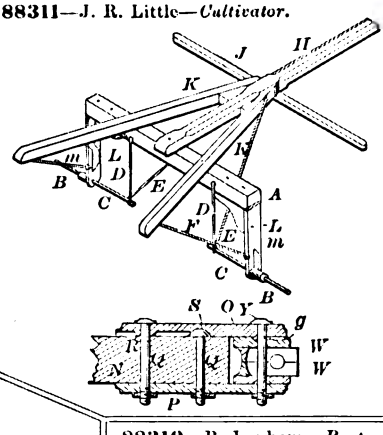

88313—Marvin & Vose—*Stove.*

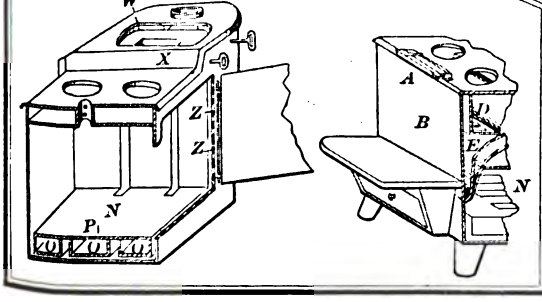

88310—R. Lapham—*Boot and Shoe Heel.*

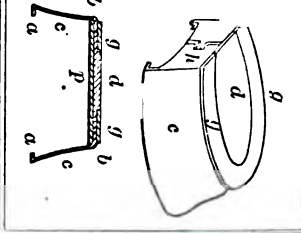

88334—W. D. Slack—*Harvester.*

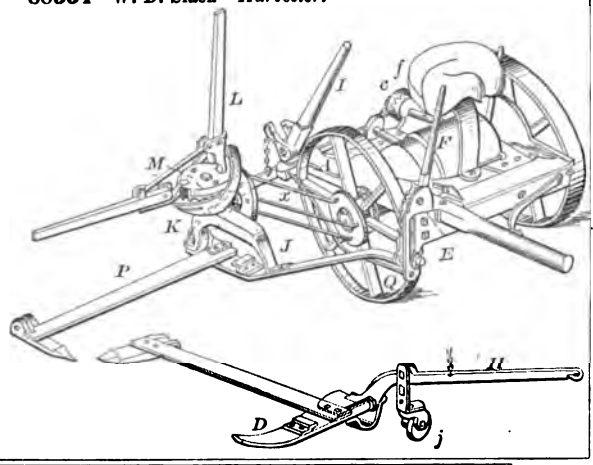

88338—P. C. Smith—*Watch Chain.*

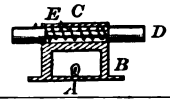

88339—R. M. Smith—*Farm Gate.*

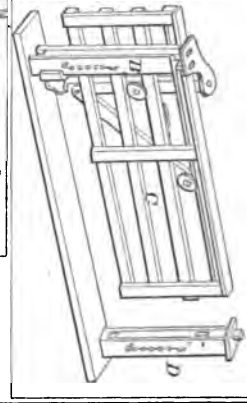

88337—O. L. Smith—*Car Coupling.*

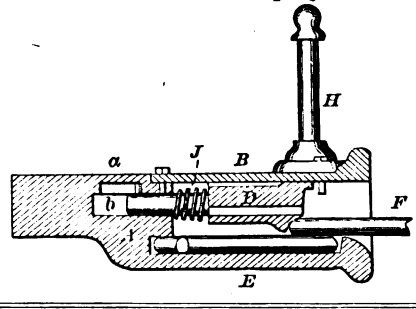

88336—H. Smith, 3d—*Stump Extractor.*

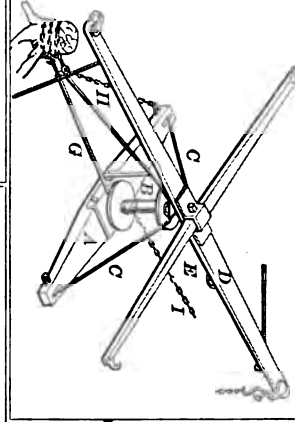

88340—Smith & Priest—*Animal Shearing Machine.*

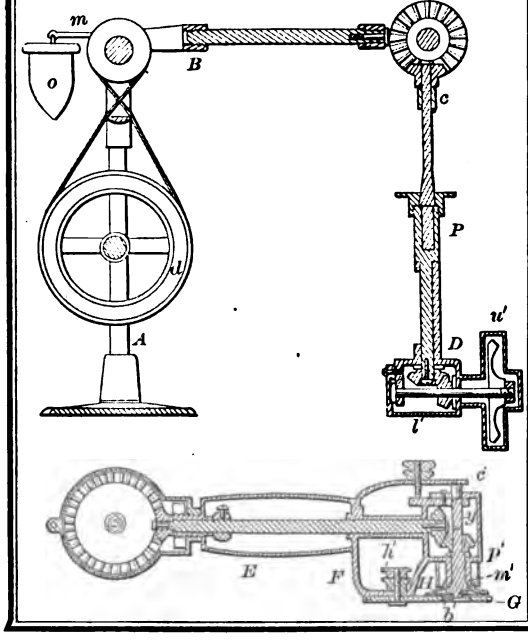

88342—H. Soggs—*Car Coupling.*

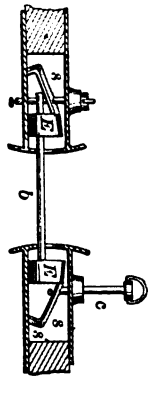

88341—W. H. Snyder—*Water Wheel.*

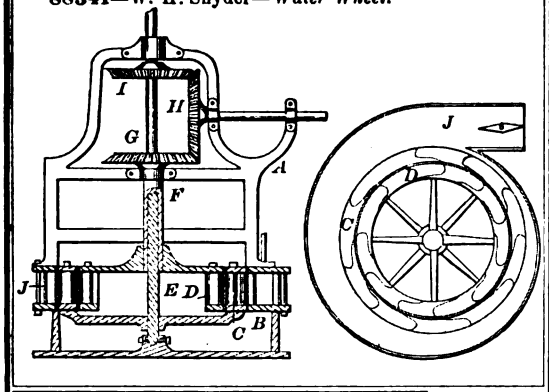

88343—G. C. Steinhauer—*Fan.*

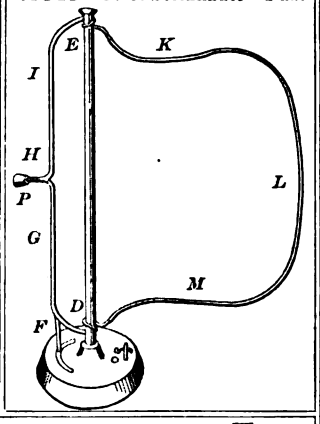

88344—U. T. Stewart—*Shovel Plow.*

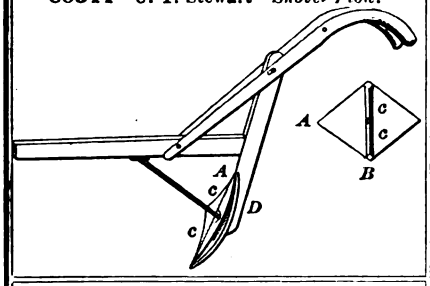

88345—J. Tiffany—*Steam Generator.*

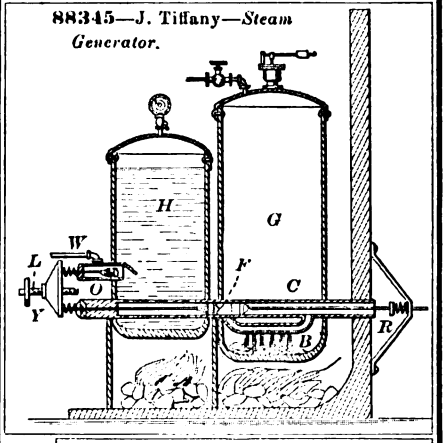

88346—A. S. & T. J. Trafton—*Grappling for Anchors.*

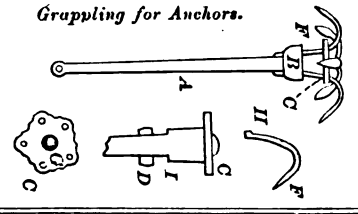

88347—J. A. Vander Waag—*Velocipede.*

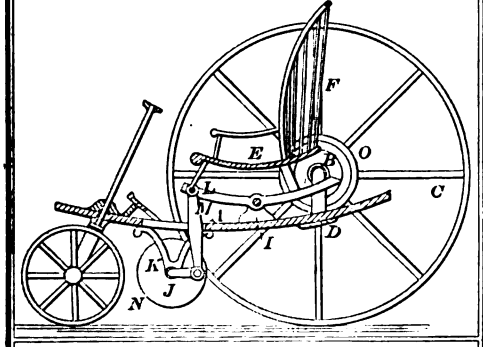

88349—Vogel & Albright—*Cabbage Cutter.*

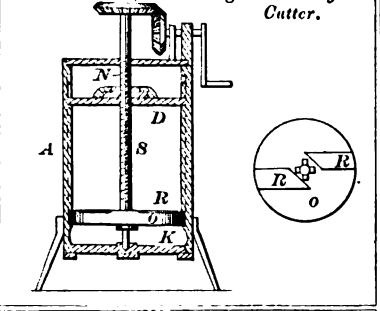

88350—D. G. Walker—*Weather Strip.*

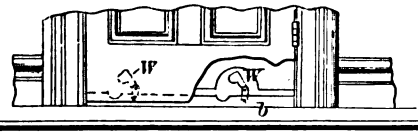

88351—F. H. Walker—*Hinge.*

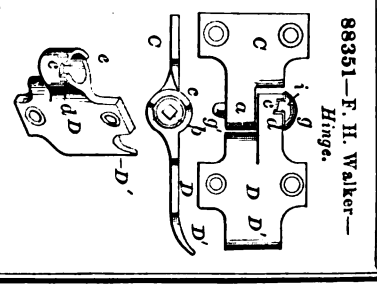

88352—R. H. Waldron—*Cooking Furnace.*

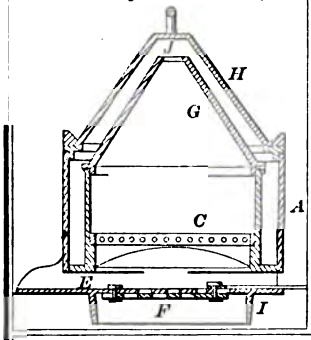

88355—J. Yocom, Jr.—*Grate Bar.*

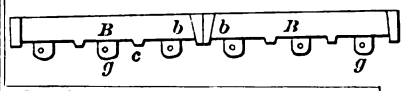

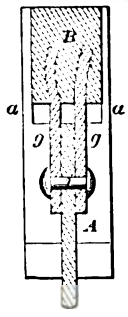

88354—H. Whitney—*Inkstand.*

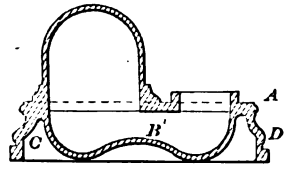

88353—W. G. White—*For Pressing Bricks.*

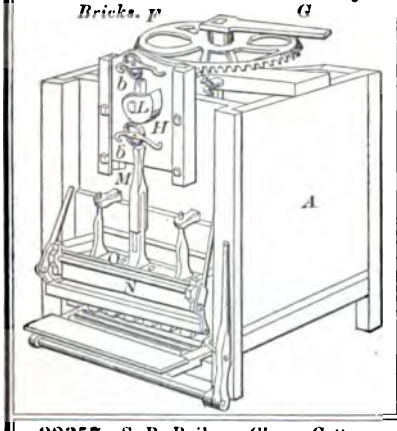

88358—C. Barns—*Harvester Rake.*

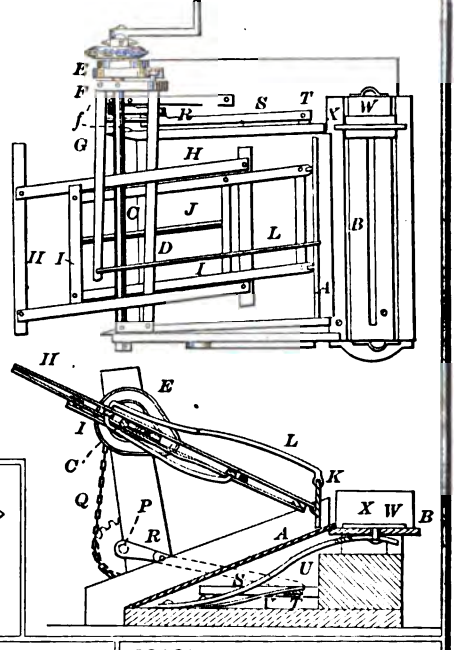

88357—S. R. Bailey—*Cheese Cutter.*

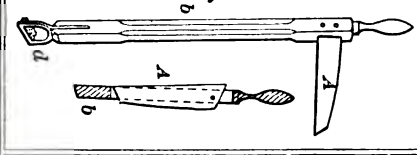

88359—Bate & Pinkham—*Fire Extinguisher.*

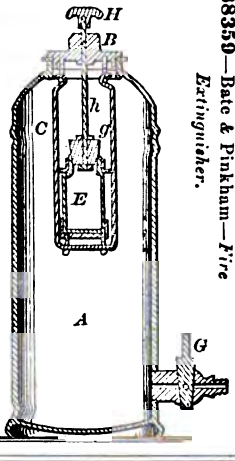

88356—A. B. Allen—*Axle Box Bearing.*

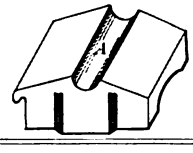

88360—J A. Berrill—*Paint Mill.*

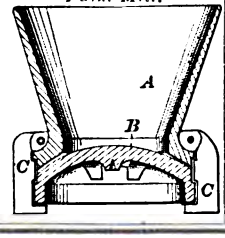

88361—Black, Hinkle & White—*Brick and Mortar Hod.*

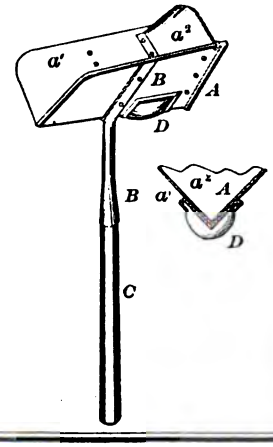

88341—W. H. Snyder—*Water Wheel.*

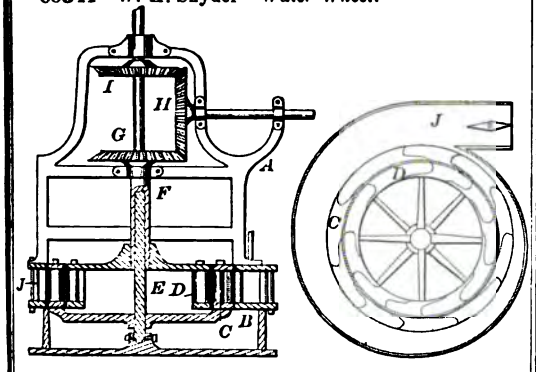

88343—G. C. Steinhauer—*Fan.*

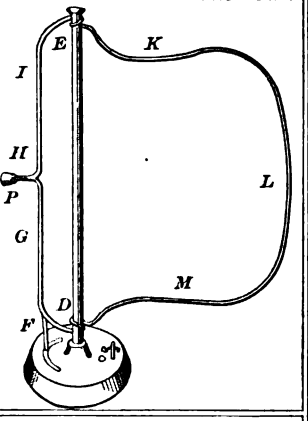

88344—U. T. Stewart—*Shovel Plow.*

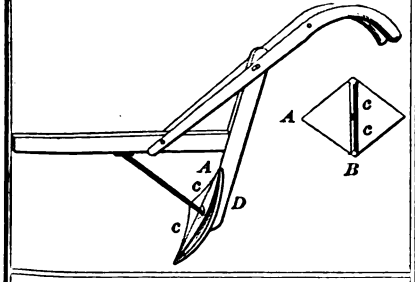

88345—J. Tiffany—*Steam Generator.*

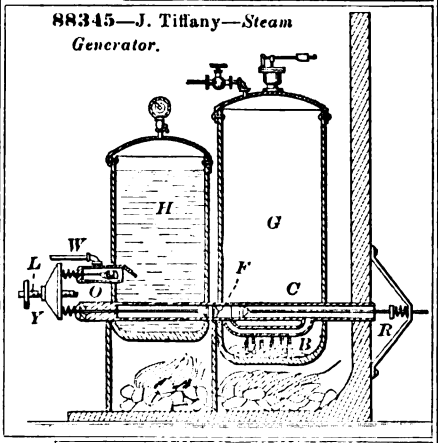

88346—A. S. & T. J. Trafton—*Grappling for Anchors.*

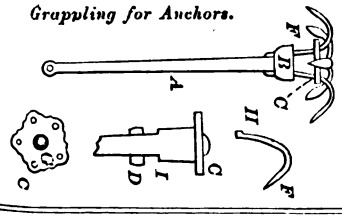

88347—J. A. Vander Waag—*Velocipede.*

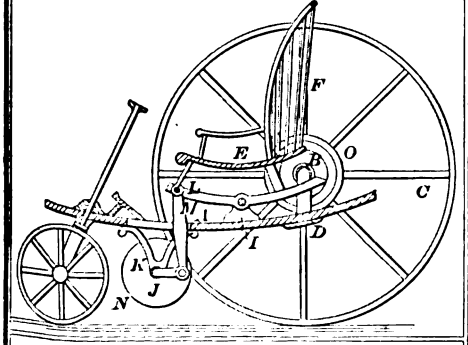

88349—Vogel & Albright—*Cabbage Cutter.*

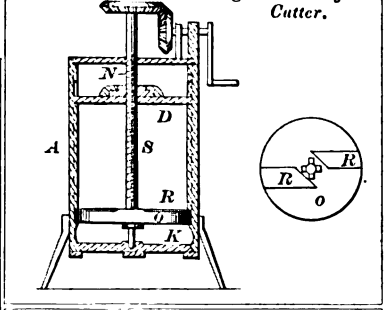

88350—D. G. Walker—*Weather Strip.*

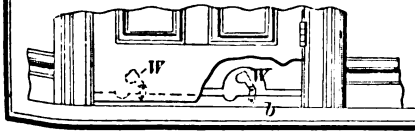

88351—F. H. Walker—*Hinge.*

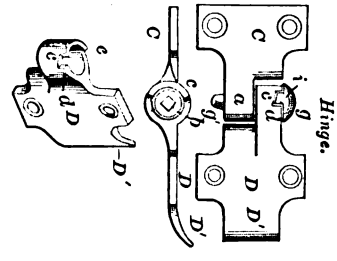

88352—R. H. Waldron—*Cooking Furnace.*

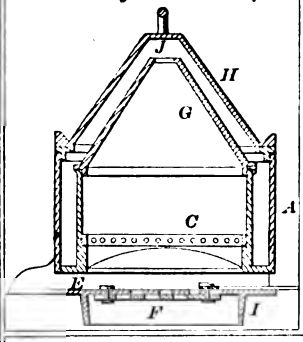

88355—J. Yocom, Jr.—*Grate Bar.*

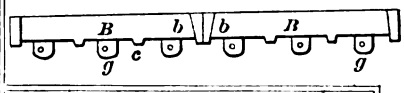

88354—H. Whitney—*Inkstand.*

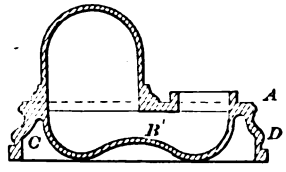

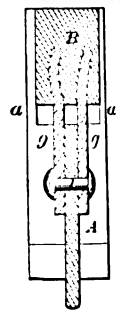

88353—W. G. White—*For Pressing Bricks.*

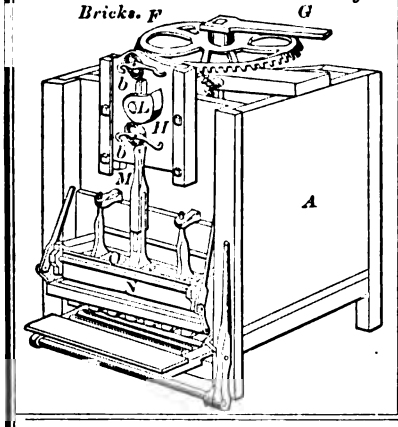

88358—C. Barns—*Harvester Rake.*

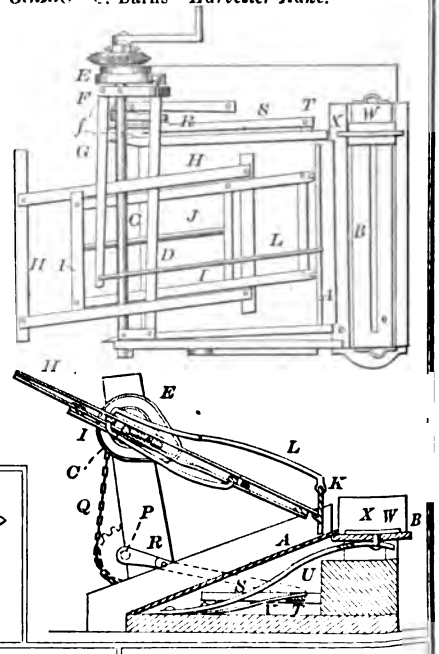

88357—S. R. Bailey—*Cheese Cutter.*

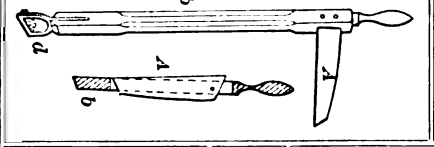

88359—Bate & Pinkham—*Fire Extinguisher.*

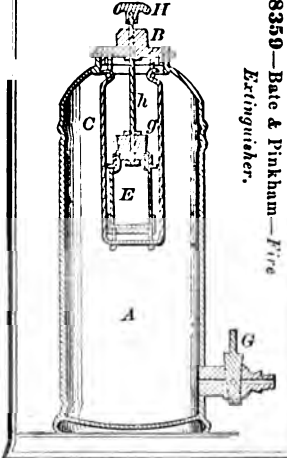

88356—A. B. Allen—*Axle Box Bearing.*

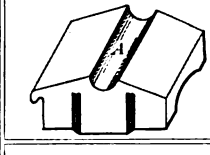

88360—J A. Berrill—*Paint Mill.*

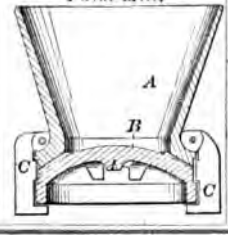

88361—Black, Hinkle & White—*Brick and Mortar Hod.*

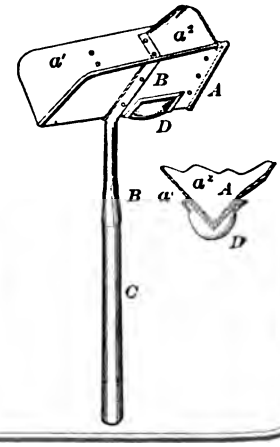

88380—D. Forrest—*Boot Strap.*

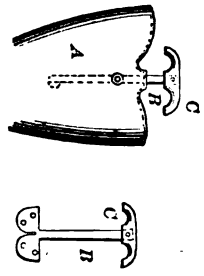

88381—W. F. Goodwin—*Harvester.*

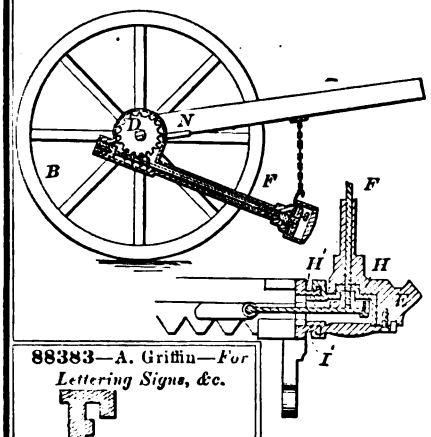

88382—R. A. Green—*Marker and Planter.*

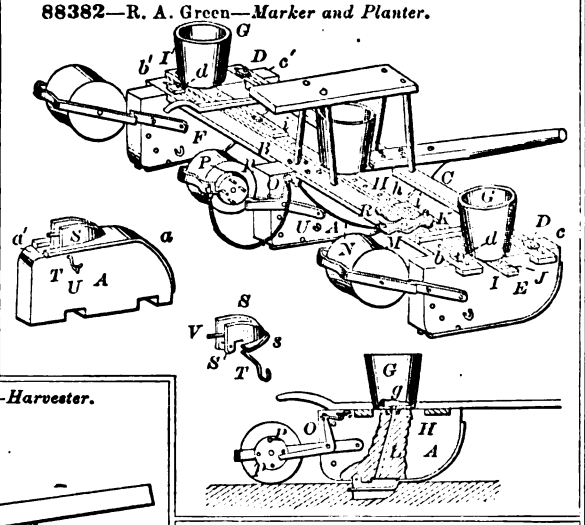

88383—A. Griffin—*For Lettering Signs, &c.*

88384—T. Grob—*Acoustic Stage.*

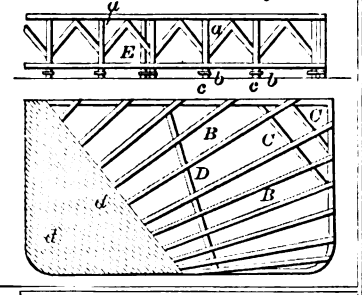

88385—J. W. Hilton—*Lock Nut.*

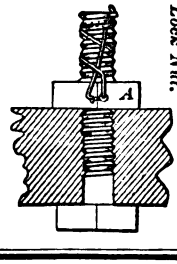

88386—Hoyt & Van Cleef—*Vault Cover.*

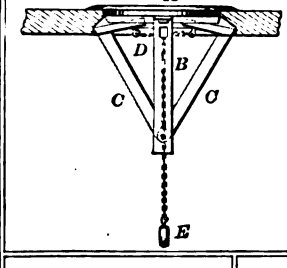

88387—Inman & Withington—*Wash Boiler.*

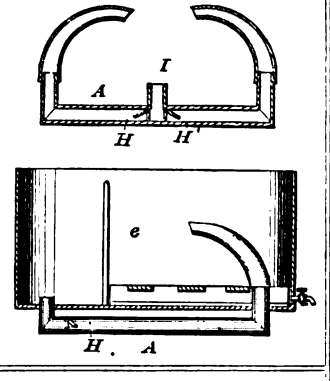

88388—J. Jacquet—*Foot Stool and Foot Warmer.*

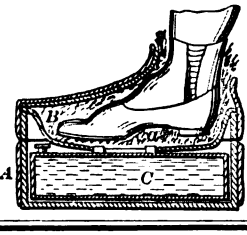

88389—H. James—*Reamer.*

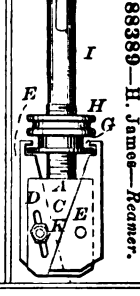

88390—P. Johnson—*Clothes Pin.*

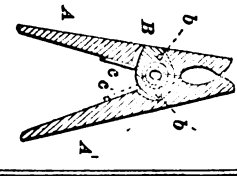

88391—E. O. Jones—*Land Roller.*

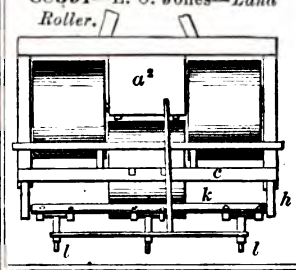

88393—M. Kinsey—*Skate.*

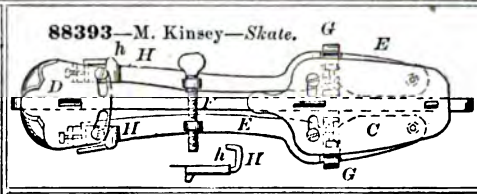

88394—C. Lidren—*Harvester Rake.*

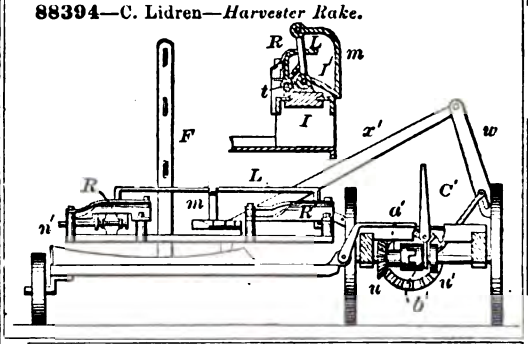

88395—W. Loofbourow—*Hop Dryer.*

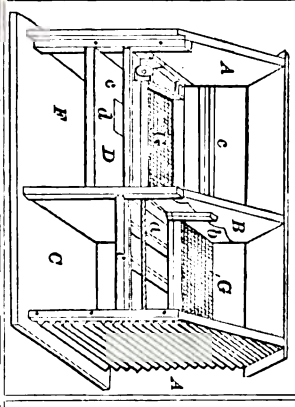

88396—L. Low—*Grain Separator.*

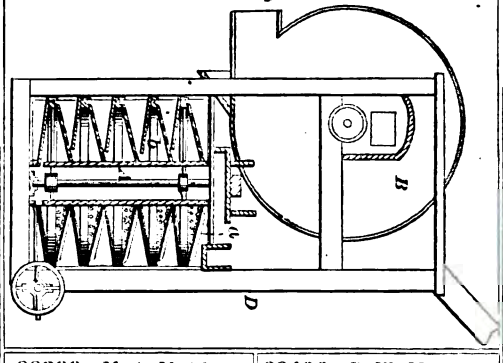

88397—A. W. Lozier—*Horse Hay Fork.*

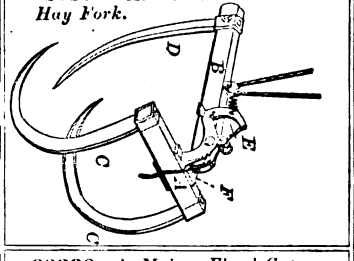

88398—A. Main—*Flood Gate.*

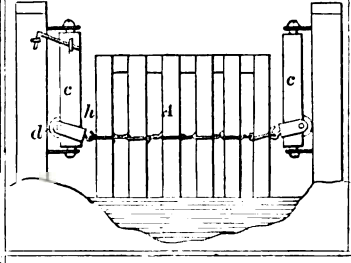

88399—M. A. McAfee—*Churn.*

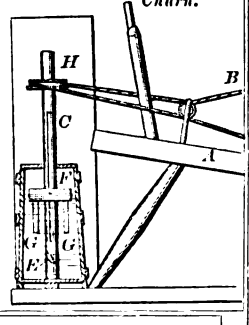

88400—B. W. McCure—*Horse Collar.*

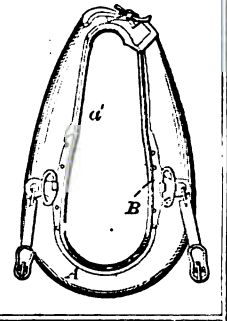

88402—J. W. McKee—*Faucet.*

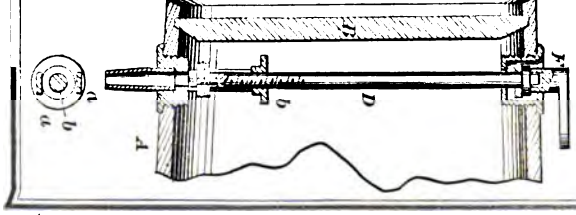

88403—A. F. Migeon—*Cattle Tie.*

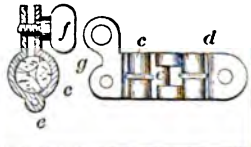

88380—D. Forrest—*Boot Strap.*

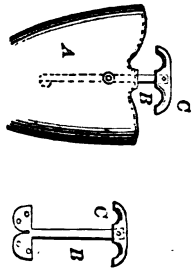

88382—R. A. Green—*Marker and Planter.*

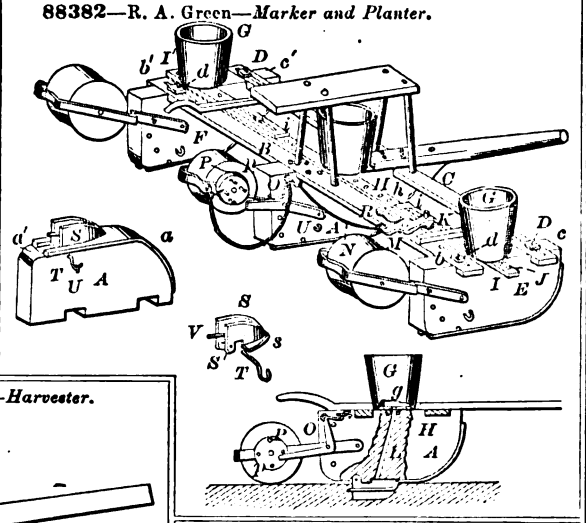

88381—W. F. Goodwin—*Harvester.*

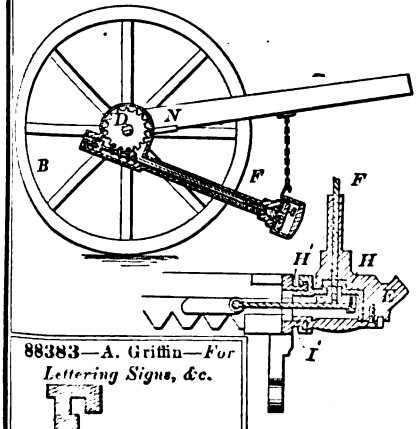

88383—A. Griffin—*For Lettering Signs, &c.*

88384—T. Grob—*Acoustic Stage.*

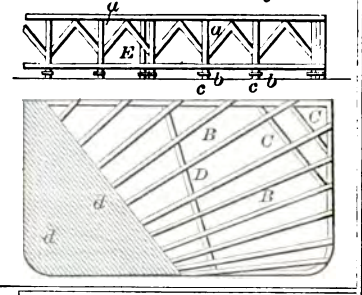

88386—Hoyt & Van Cleef—*Vault Cover.*

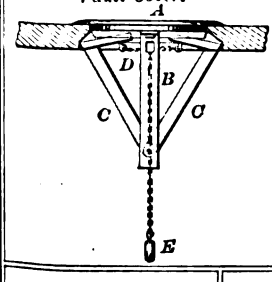

88389—H. James—*Reamer.*

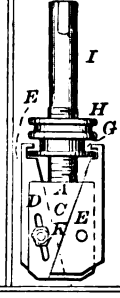

88387—Inman & Withington—*Wash Boiler.*

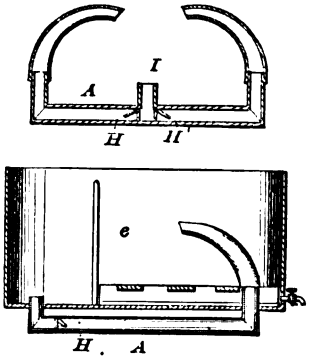

88385—J. W. Hilton—*Lock Nut.*

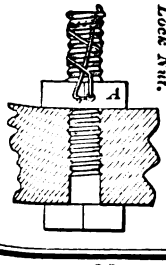

88388—J. Jacquet—*Foot Stool and Foot Warmer.*

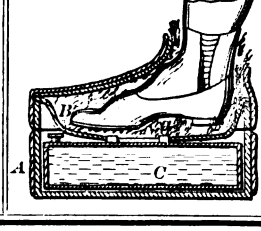

88390—P. Johnson—*Clothes Pin.*

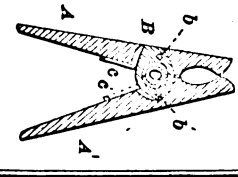

88391—E. O. Jones—*Land Roller.*

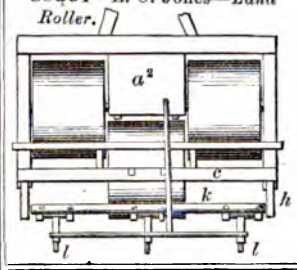

88393—M. Kinsey—*Skate.*

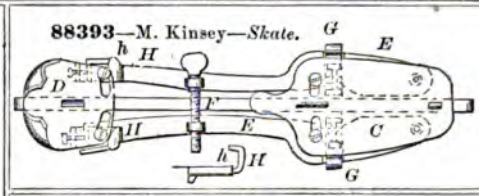

88394—C. Lidren—*Harvester Rake.*

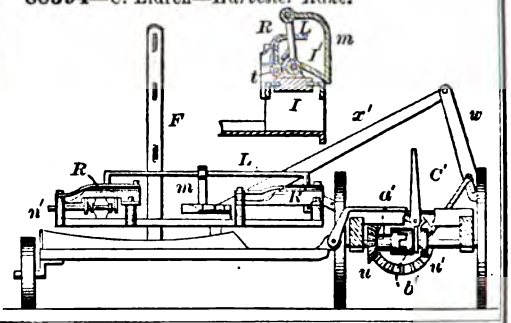

88395—W. Loofbourow—*Hop Dryer.*

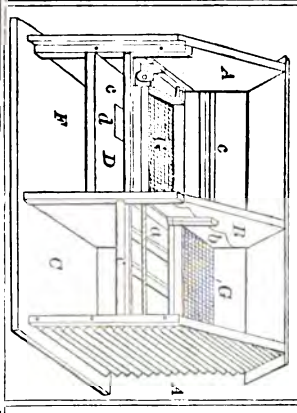

88396—L. Low—*Grain Separator.*

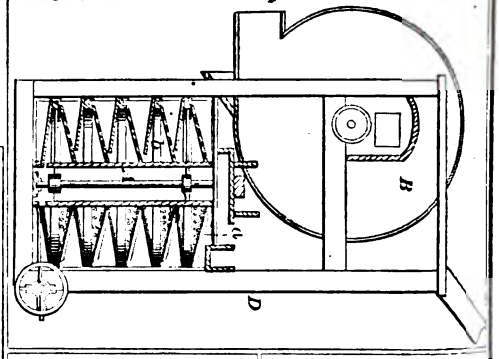

88397—A. W. Lozier—*Horse Hay Fork.*

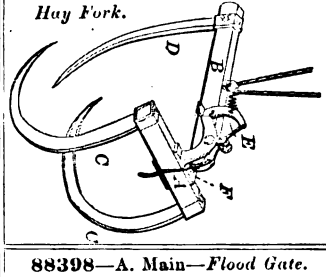

88398—A. Main—*Flood Gate.*

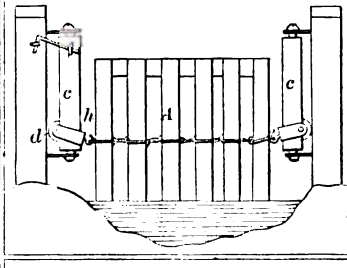

88399—M. A. McAfee—*Churn.*

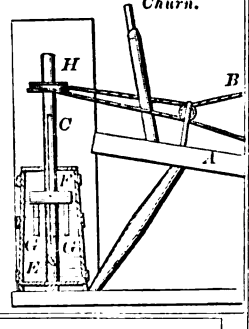

88400—B. W. McCure—*Horse Collar.*

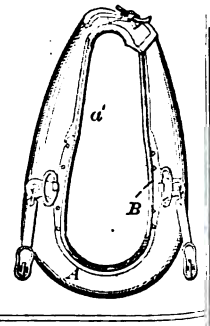

88402—J. W. McKee—*Faucet.*

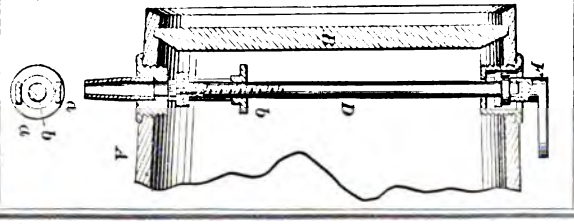

88403—A. F. Migeon—*Cattle Tie.*

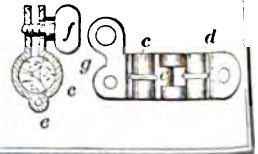

88420—J. P. Sherwood—*Stovepipe Shelf.*

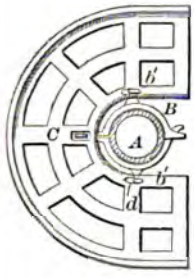

88422—J E. Stevenson—*Water Wheel.*

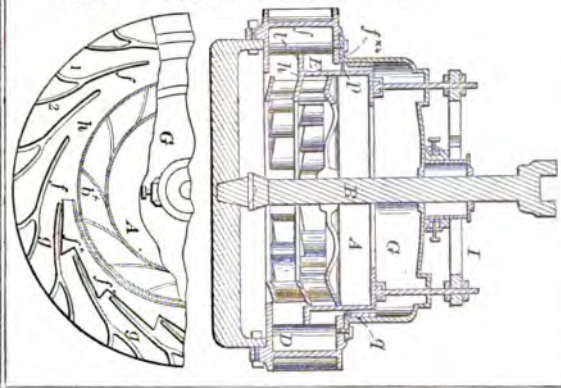

88421—A. G. Slagle—*Game.*

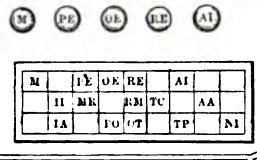

88423—S. Upson—*For Violin Practice.*

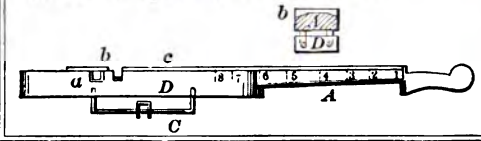

88425—G. Walworth—*For Moulding Kettles.*

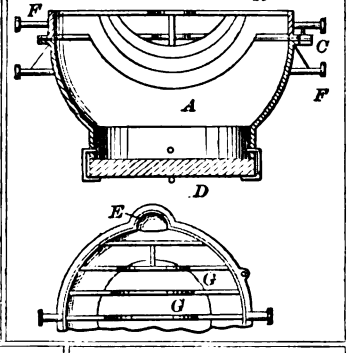

88427—H. C. Wilson—*Fence.*

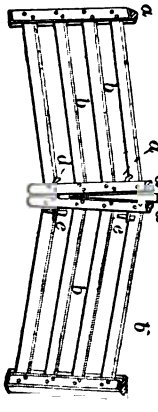

88424—I. L. Vansant—*Car Coupling.*

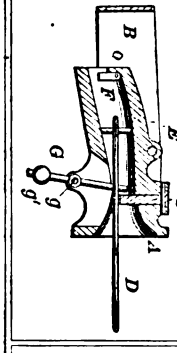

88430—J. B. Alexander—*Lamp Shade.*

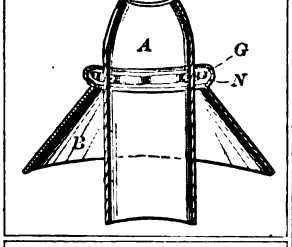

88426—E. Whitehead—*Velocipede.*

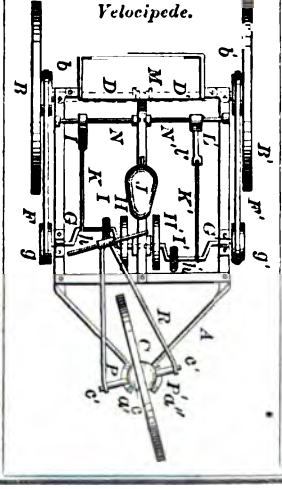

88428—C. F. Woodruff—*Water Elevator.*

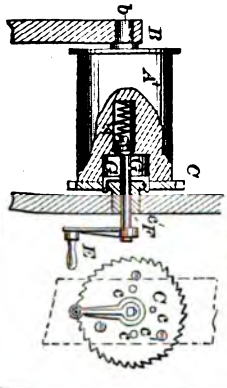

88429—S. Alderman—*Road Scraper.*

88412—J. Richard—*Fence.*

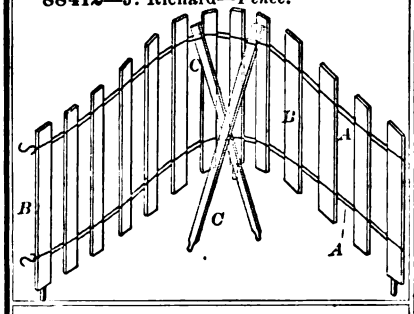

88413—J. G. Robinson—*Plow.*

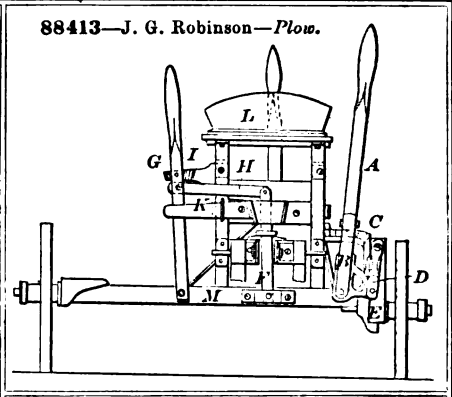

88414—J. G. Robinson—*Plow.*

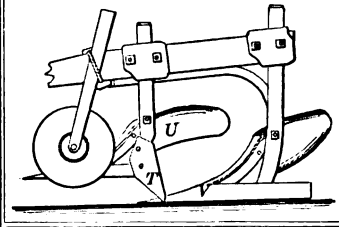

88415—P. Rogers—*Corn Planter.*

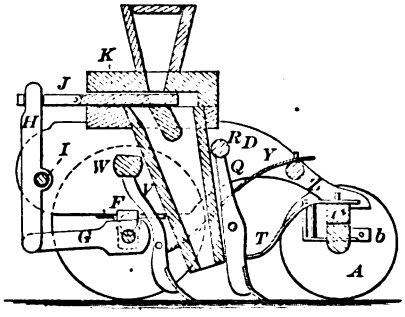

88416—M. Sackett—*Seeder.*

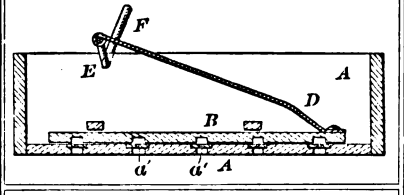

88417—A. M. Schilling—*Sawing Machine.*

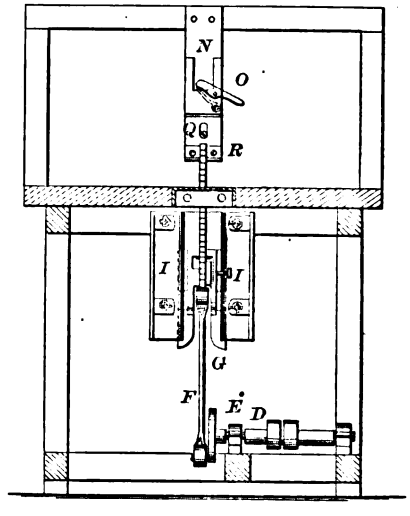

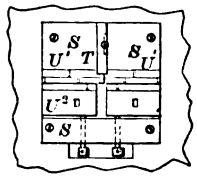

88418—A. Schlingman—*Washing Machine.*

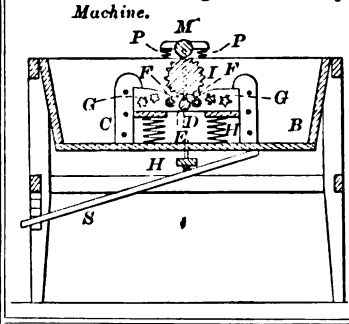

88419—C. Seimel—*Soldering Furnace.*

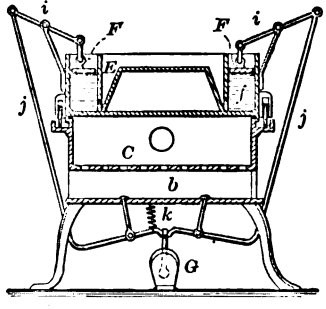

88420—J. P. Sherwood—*Stovepipe Shelf.*

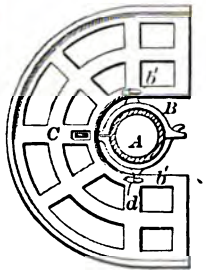

88422—J E. Stevenson—*Water Wheel.*

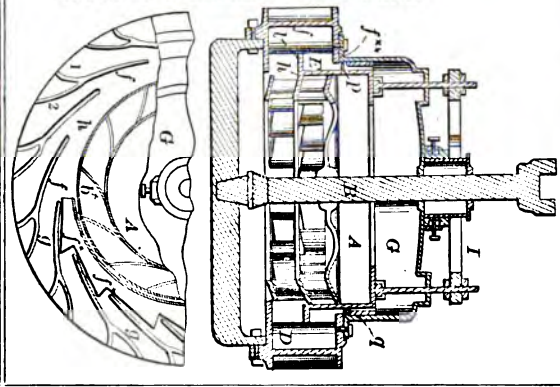

88421—A. G. Slagle—*Game.*

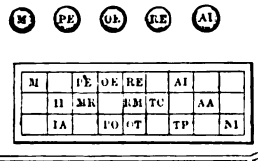

88423—S. Upson—*For Violin Practice.*

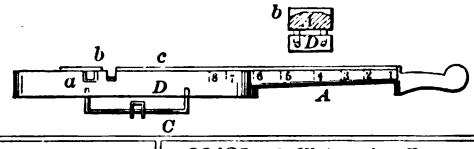

88427—H. C. Wilson—*Fence.*

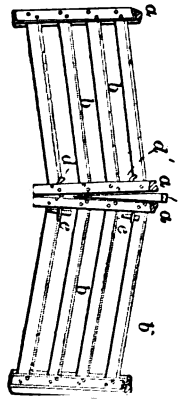

88424—I. L. Vansant—*Car Coupling.*

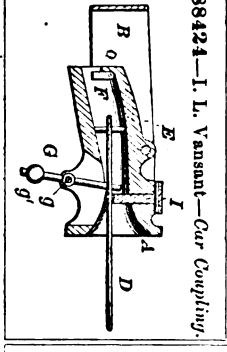

88425—G. Walworth—*For Moulding Kettles.*

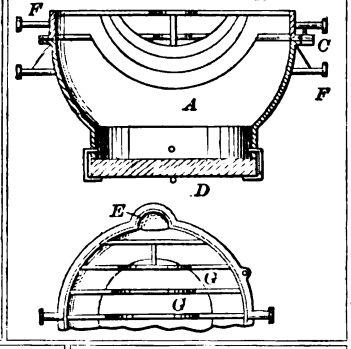

88428—C. F. Woodruff—*Water Elevator.*

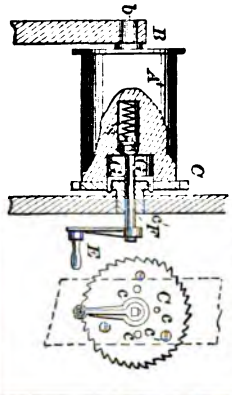

88430—J. B. Alexander—*Lamp Shade.*

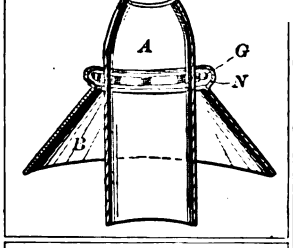

88429—S. Alderman—*Road Scraper.*

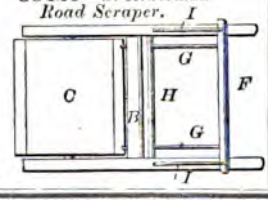

88426—E. Whitehead—*Velocipede.*

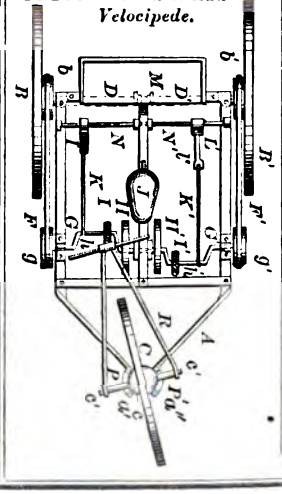

88446—F. E. Canda—*Bridge.*

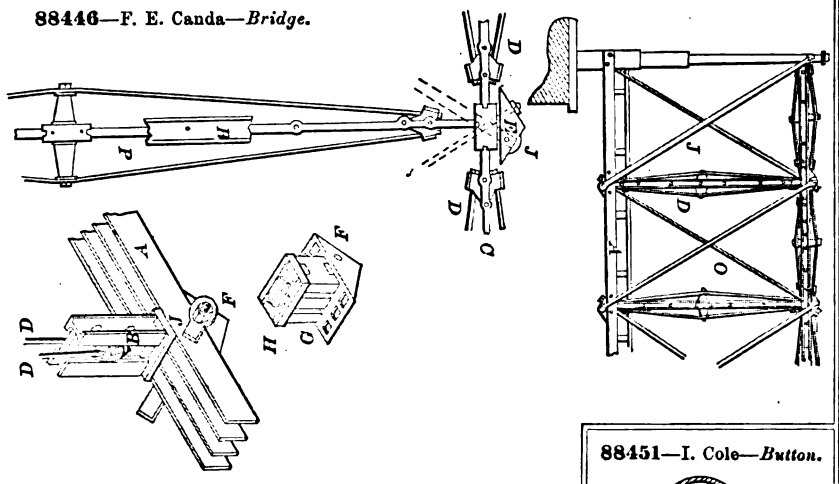

88449—J. C. Clime—*Umbrella Cover.*

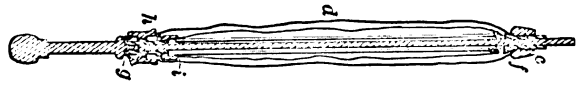

88451—I. Cole—*Button.*

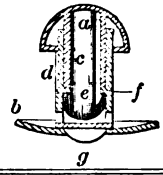

88450—B. C. Coldwell—*Spinning Mule.*

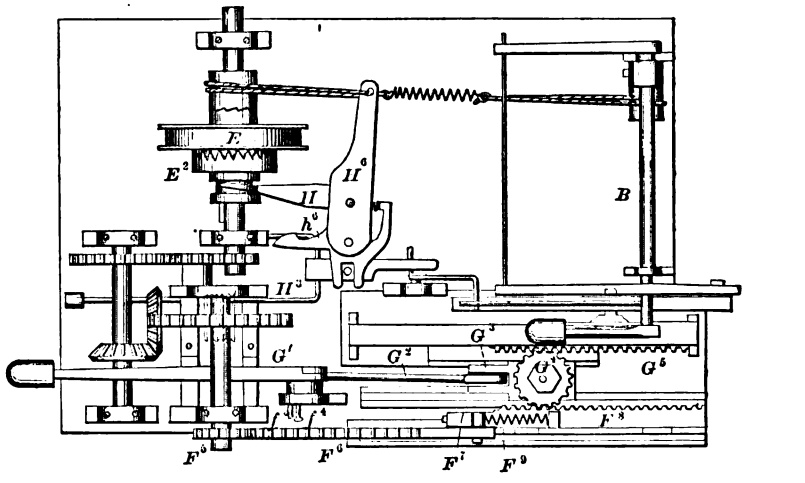

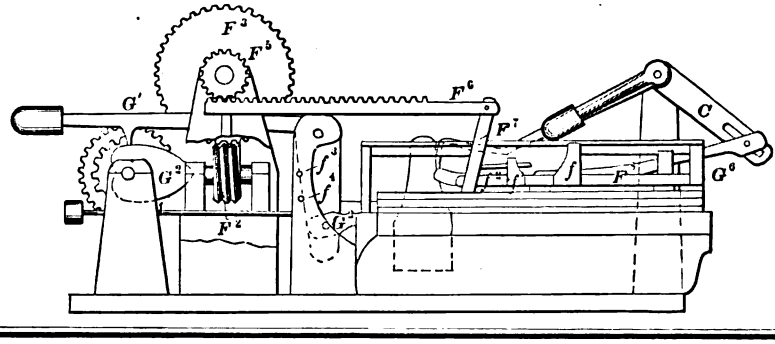

88437—L. Berenger—*Ironing Machine.*

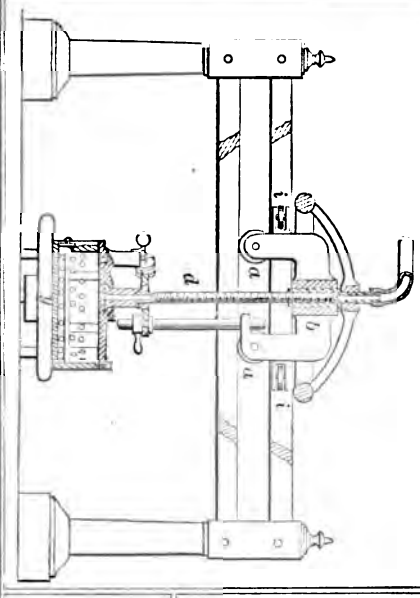

88440—W. L. Braddock—*Car Coupling.*

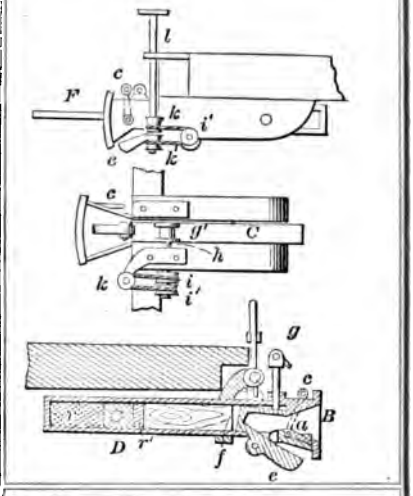

88441—J. K. Caldwell—*Drying Furnace and Oven.*

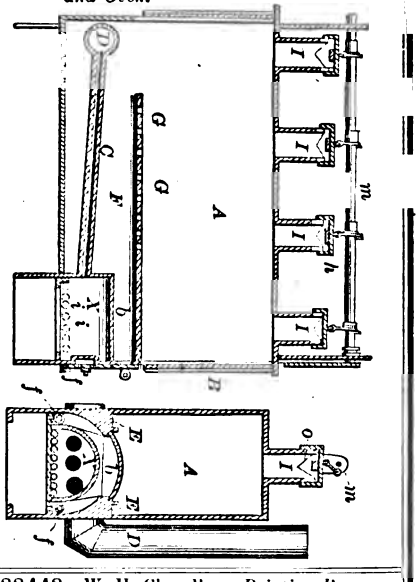

88442—I. Buckman, Jr.—*Refrigerator and Weighing Apparatus.*

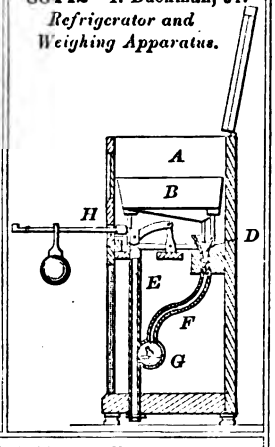

88444—G. W. Bradley—*Spike for Overshoes.*

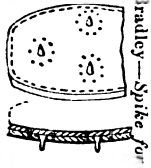

88445—S. N. Caldwell—*Fence.*

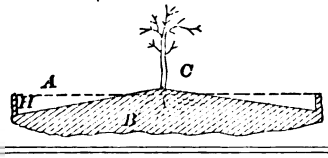

88447—R. R. Carpenter—*Car Brake and Starter.*

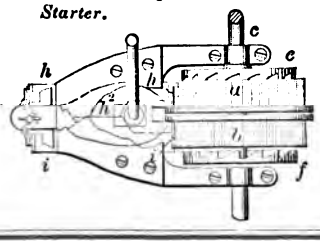

88448—W. H. Chandler—*Printing Press.*

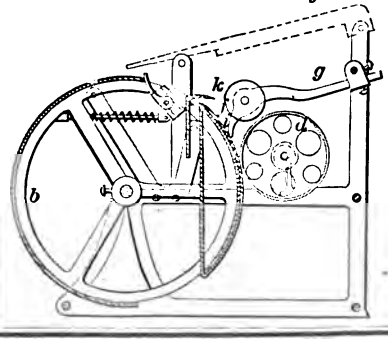

88461—W. T. Downs—*Heel.*

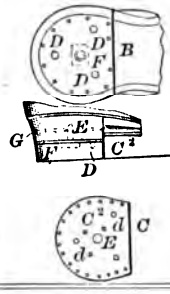

88462—H. C. Drexel—*Sad Iron Heater.*

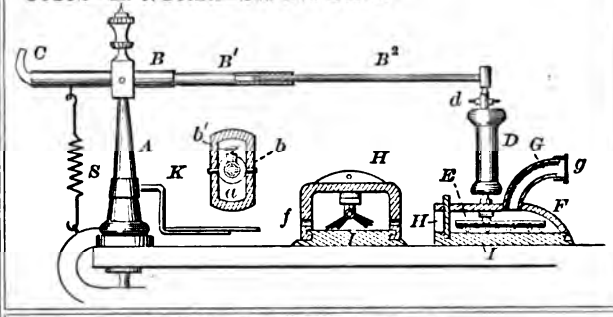

88463—E. C. Edmonds—*Toy Gun.*

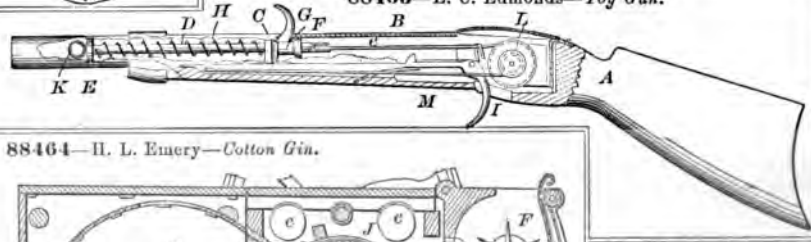

88464—H. L. Emery—*Cotton Gin.*

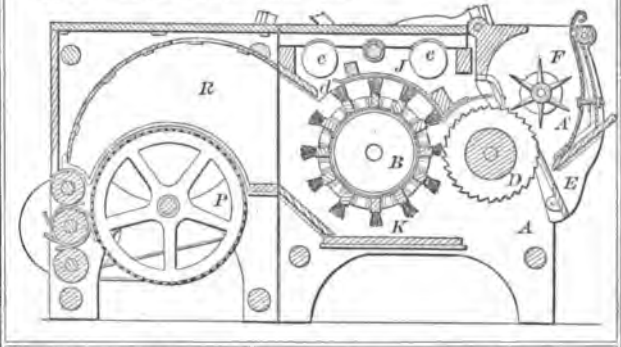

88465—J. J. Esler—*Seeding Machine.*

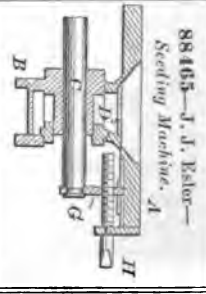

88467—J. H. French—*Slate Frame.*

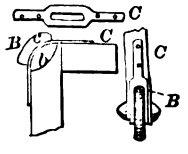

88468—R. S. Godfrey—*Refrigerator.*

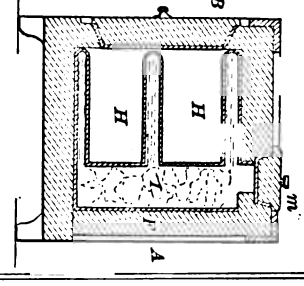

88470—W. Golcher—*Fire Arm.*

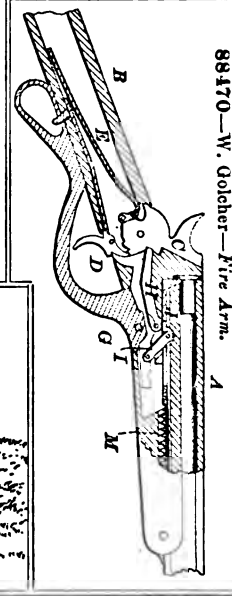

88471—L. Goodwin—*Sash Balance.*

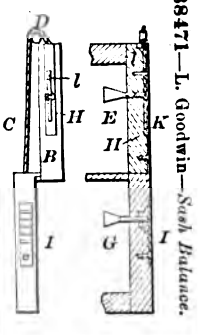

88469—W. P. Goff—*Fence.*

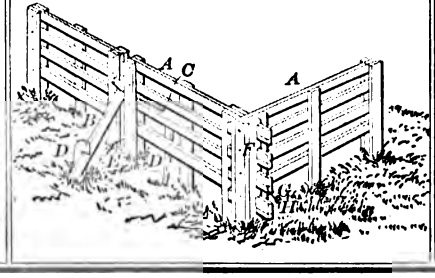

88472—G. Y. Gray—*Oven.*

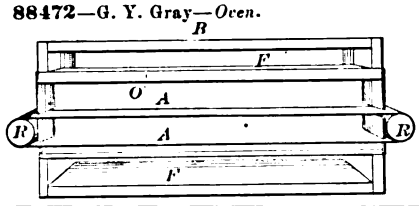

88473—A. J. Harmon—*Weather Strip.*

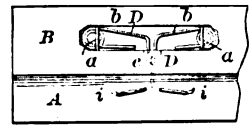

88474—J. Harper—*Churn.*

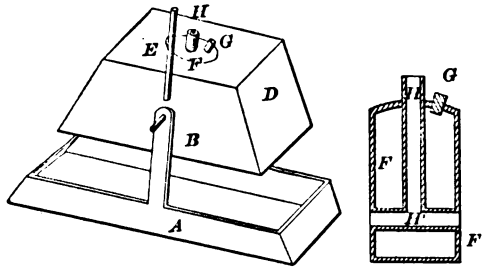

88476—L. T. Hawley—*Milk Cooler.*

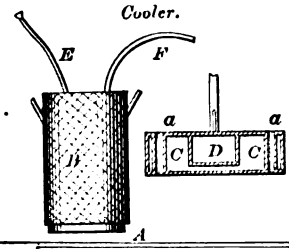

88475—J. Harris—*Meter.*

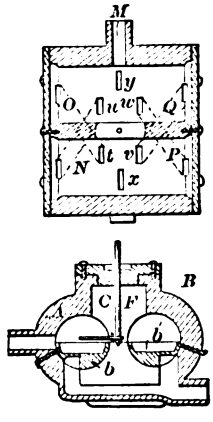

88477—G. W. Heath—*Horse Hay Fork.*

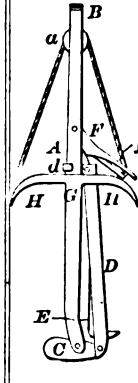

88481—E. Hitt—*Wagon Seat.*

88478—C. W. Hermance—*Washing Machine.*

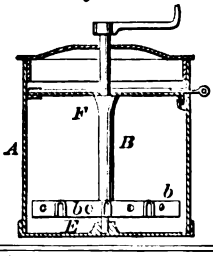

88482—C. A. Hodgman—*Picture Frame.*

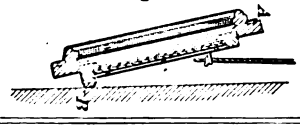

88484—Jackson & Davis—*For Heating and Separating Lime from Water.*

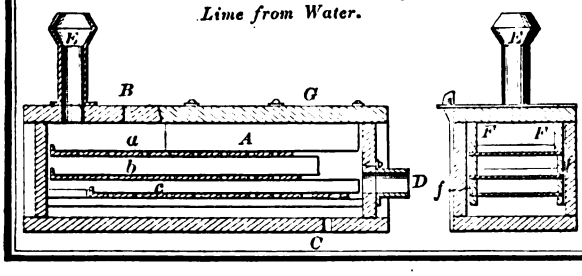

88480—G. J. & T. C. Hinde—*For Iron and Steel.*

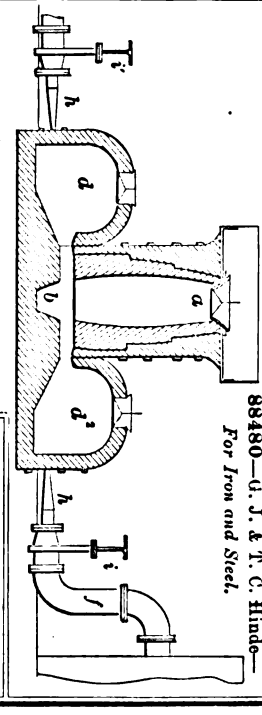

88461—W. T. Downs—*Heel.*

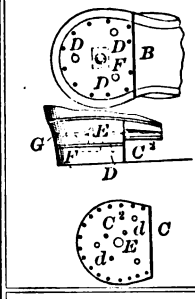

88462—H. C. Drexel—*Sad Iron Heater.*

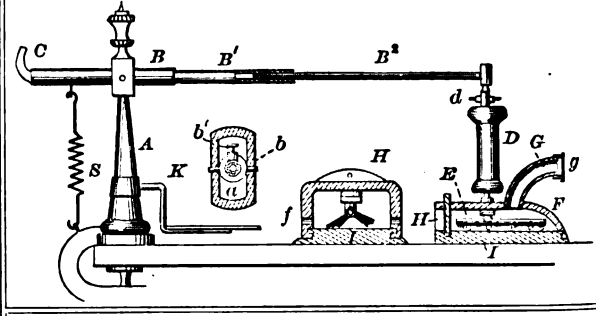

88463—E. C. Edmonds—*Toy Gun.*

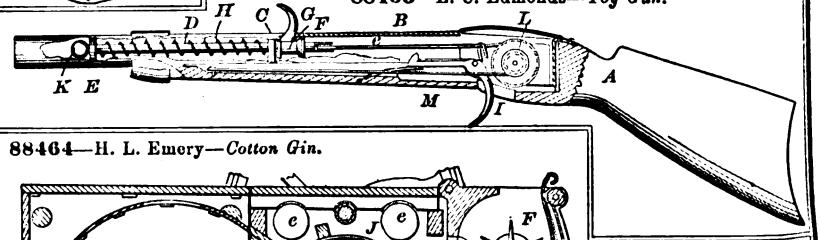

88464—H. L. Emery—*Cotton Gin.*

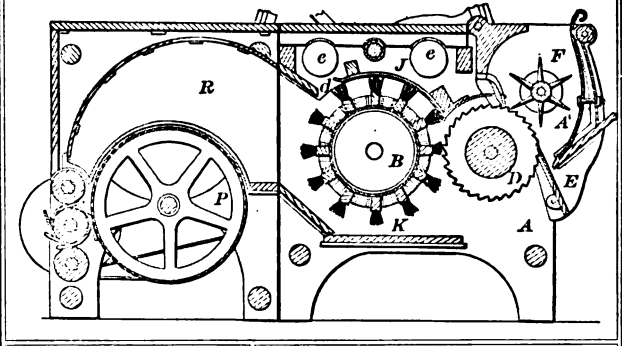

88465—J. J. Eslet—*Seeding Machine.*

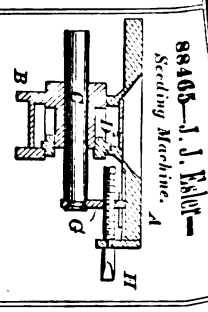

88467—J. H. French—*Slate Frame.*

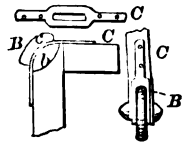

88468—R. S. Godfrey—*Refrigerator.*

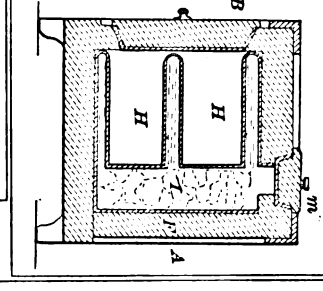

88471—L. Goodwin—*Sash Balance.*

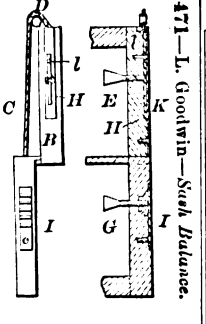

88469—W. P. Goff—*Fence.*

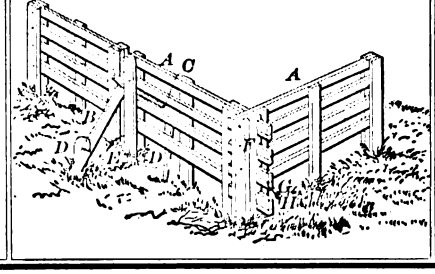

88470—W. Golcher—*Fire Arm.*

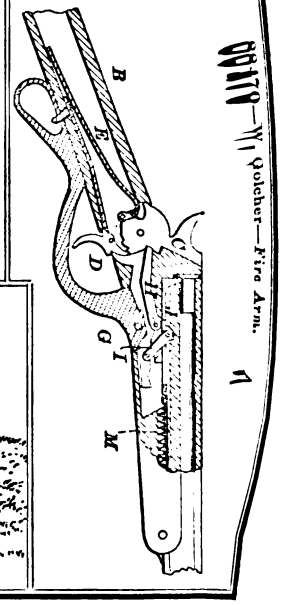

88472—G. Y. Gray—*Oven.*

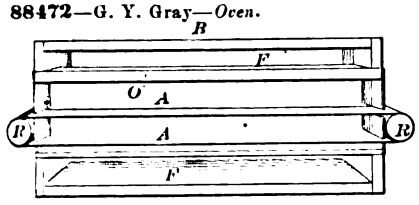

88473—A. J. Harmon—*Weather Strip.*

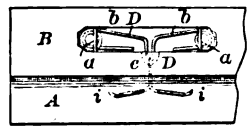

88474—J. Harper—*Churn.*

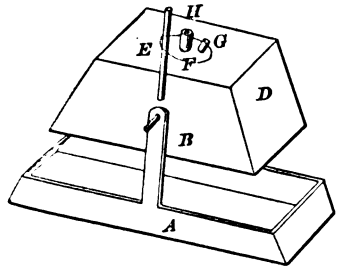

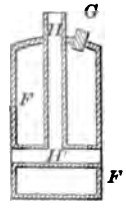

88476—L. T. Hawley—*Milk Cooler.*

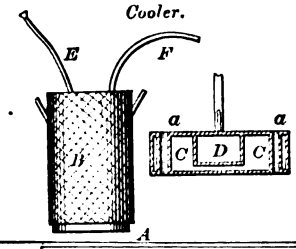

88475—J. Harris—*Meter.*

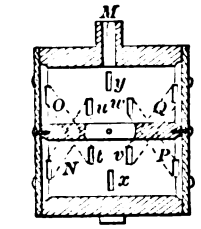

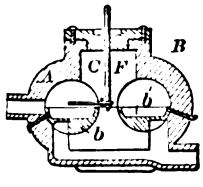

88477—G. W. Heath—*Horse Hay Fork.*

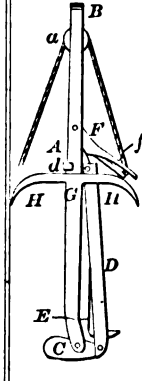

88481—E. Hitt—*Wagon Seat.*

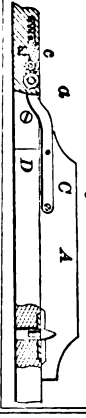

88478—C. W. Hermance—*Washing Machine.*

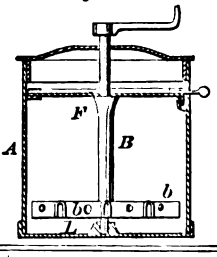

88482—C. A. Hodgman—*Picture Frame.*

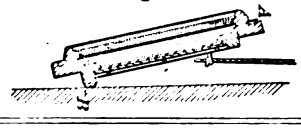

88484—Jackson & Davis—*For Heating and Separating Lime from Water.*

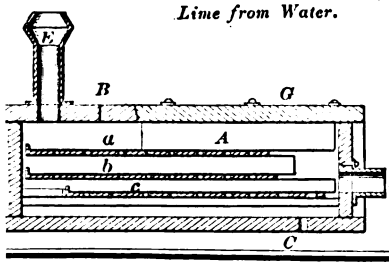

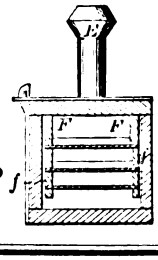

88480—G. J. & T. C. Hinde—*For Iron and Steel.*

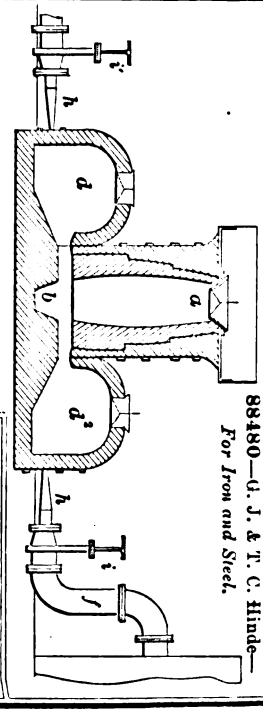

88496—J. A. Marden—*Governor.*

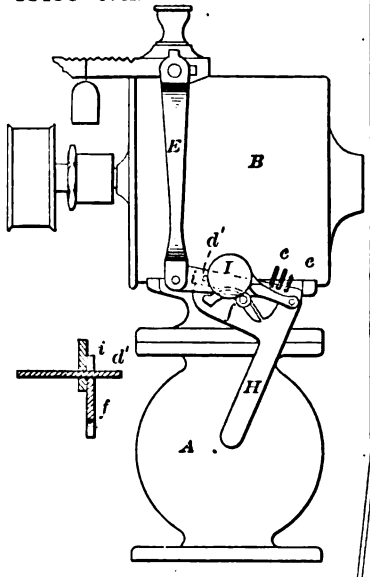

88497—J. A. Marden—*Governor.*

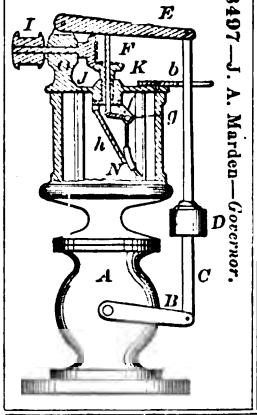

88498—Marden & Abbott—*Governor.*

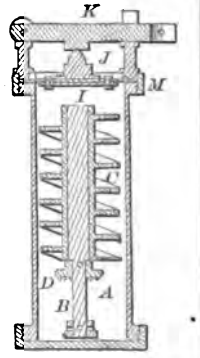

88505—I. E. Palmer—*For Stretching Fabrics.*

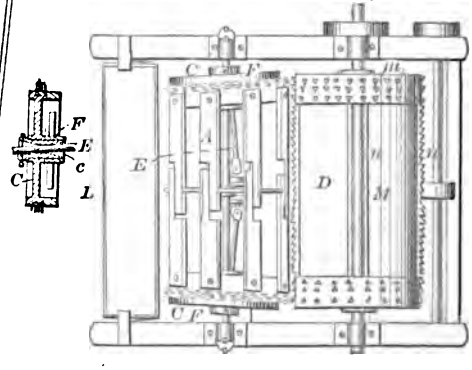

88500—W. A. McDonald—*Cheese Cutter.*

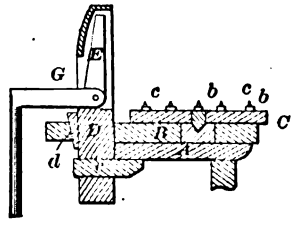

88501—P. Miles—*Curtain and Carpet Fastening.*

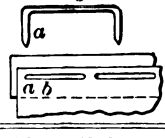

88499—J. N. McLean—*Sewing Machine.*

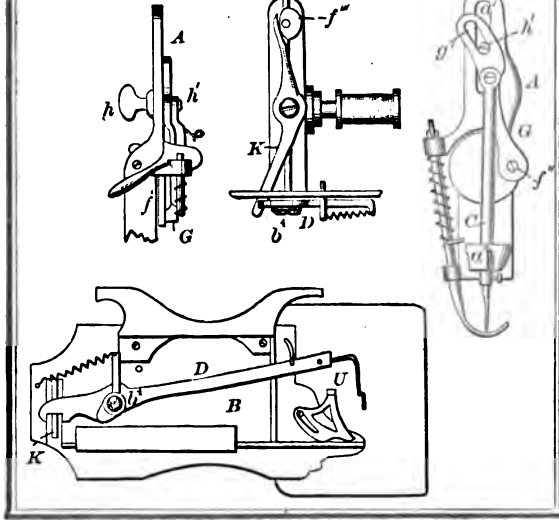

88502—J. H. Morris—*Door Sill.*

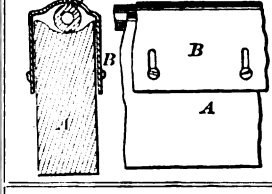

88504—G. H. Palmer—*Vault Cover.*

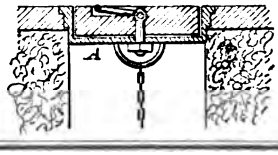

88490—H. S. Leland—*Lock.*

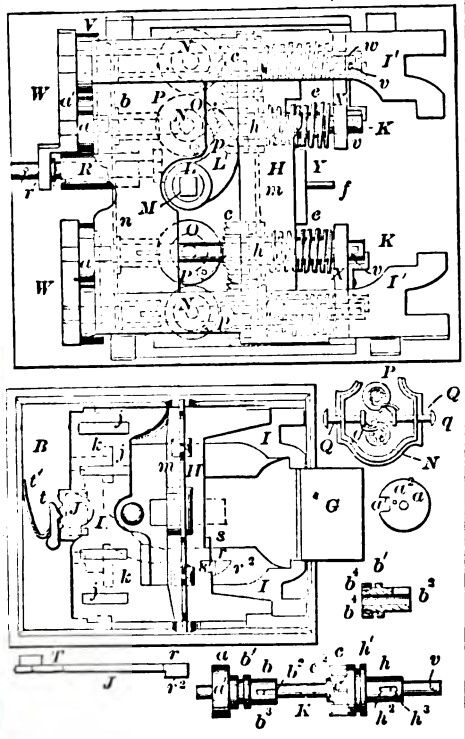

88491—J. R. Leon—*Tide Power.*

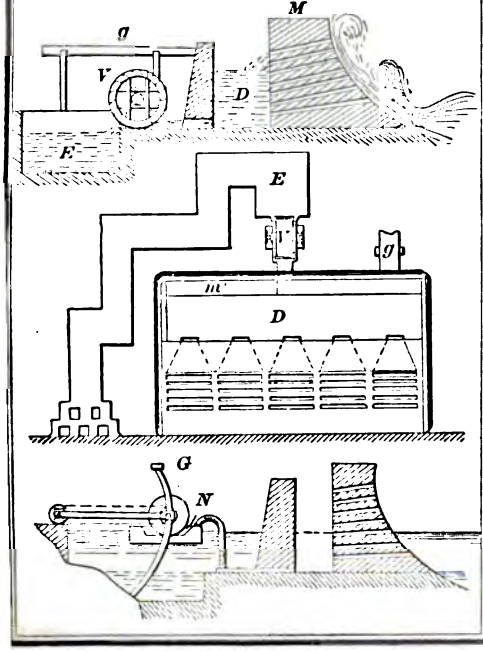

88493—E. B. Locke—*Bolt Machine.*

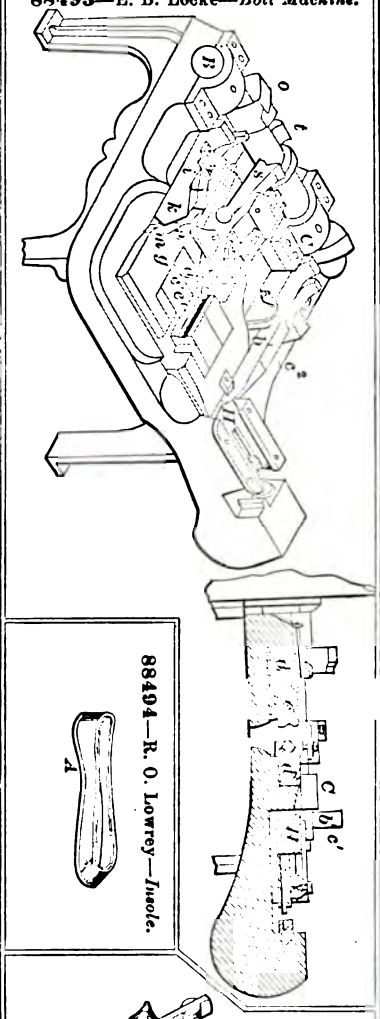

88494—R. O. Lowrey—*Insole.*

88495—J. A. Marden—*Governor.*

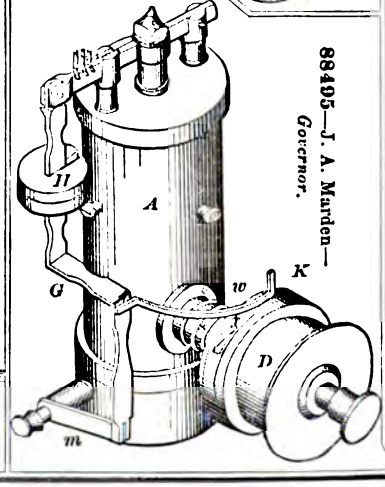

88496—J. A. Marden—*Governor.*

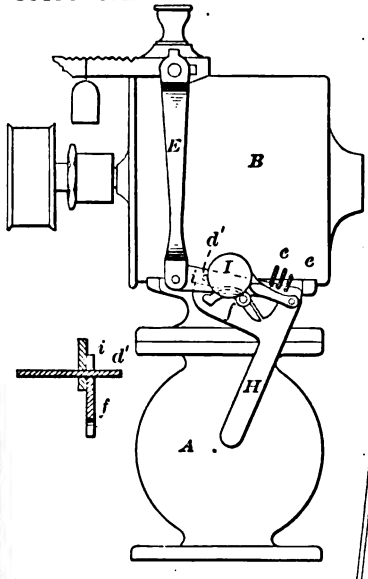

88497—J. A. Marden—*Governor.*

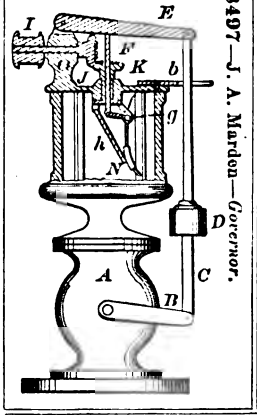

88498—Marden & Abbott—*Governor.*

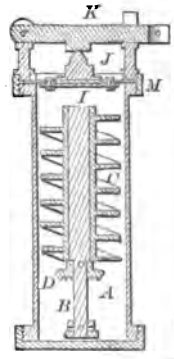

88505—I. E. Palmer—*For Stretching Fabrics.*

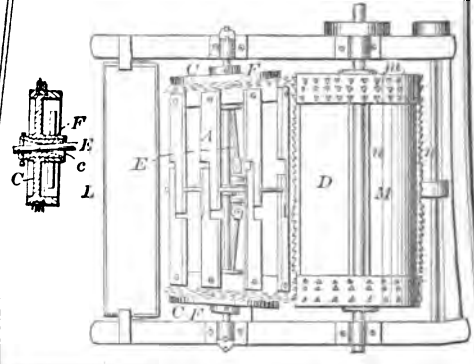

88500—W. A. McDonald—*Cheese Cutter.*

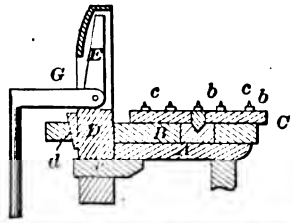

88501—P. Miles—*Curtain and Carpet Fastening.*

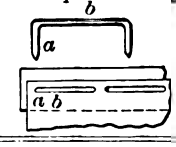

88499—J. N. McLean—*Sewing Machine.*

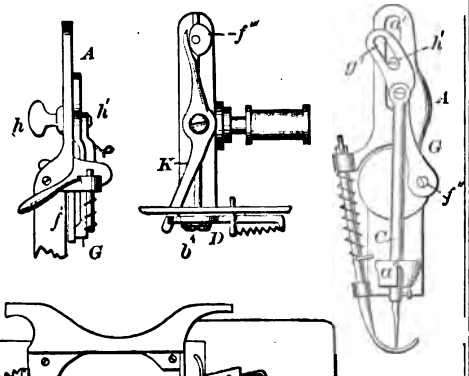

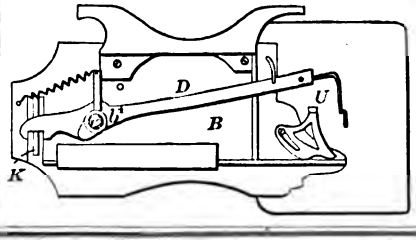

88502—J. H. Morris—*Door Sill.*

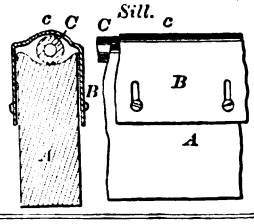

88504—G. H. Palmer—*Vault Cover.*

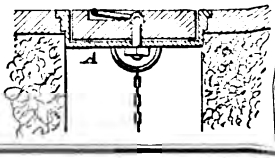

88503—B. & E. Oldfield—*Loom.*

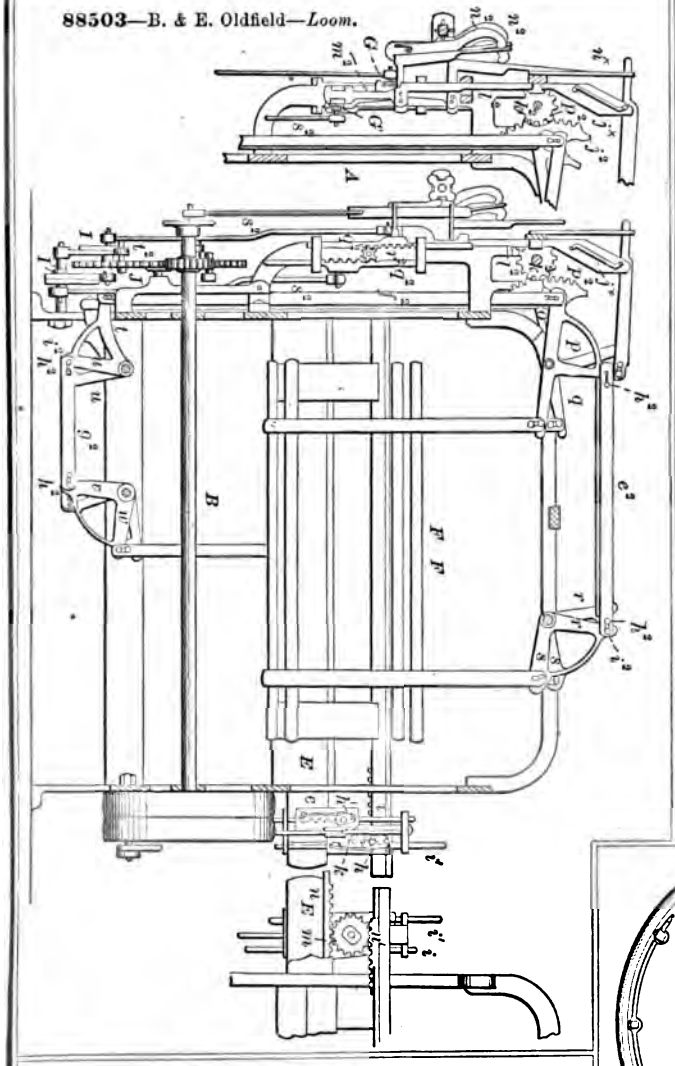

88507—T. R. Pickering—*Velocipede.*

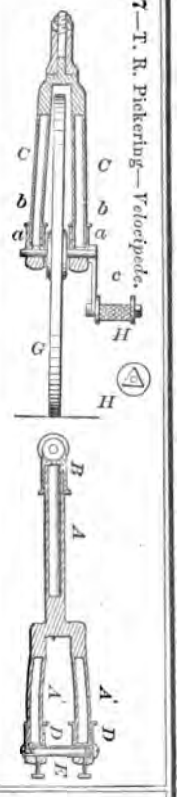

88509—C. S. Rankin—*Fireplace.*

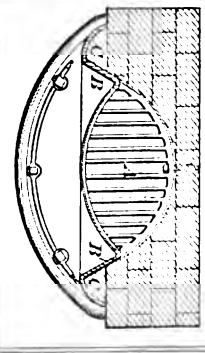

88506—W. M. Palmer—*Water Elevator.*

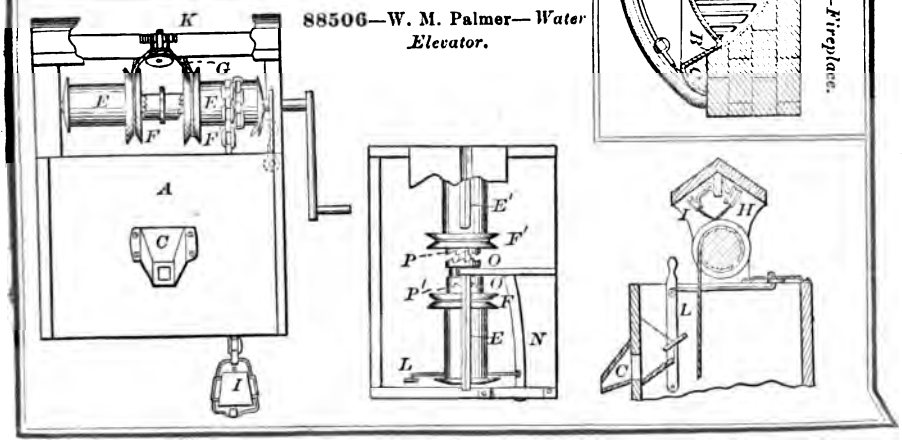

88508—N. M. Powers—*Corn Planter*

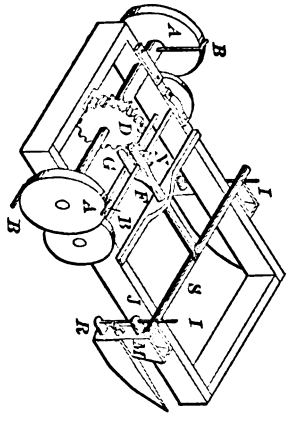

88511—Ripley & Temple—*Harvester.*

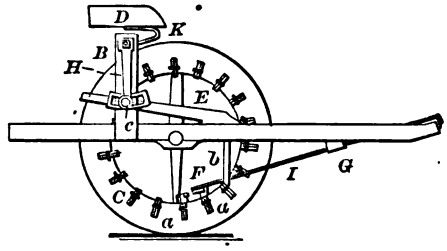

88510—A. G. Reed—*Corpse Preserver.*

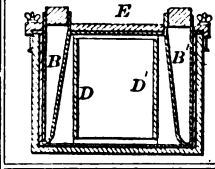

88513—A. M. Rodgers—*Chair.*

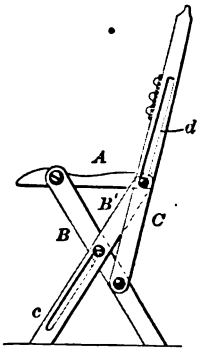

88512—W. N. Roberts—*Pump.*

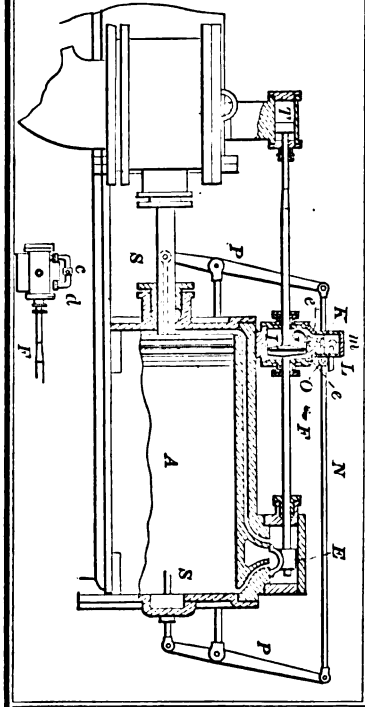

88514—S. & J. Roebuck—*Mosquito Canopy.*

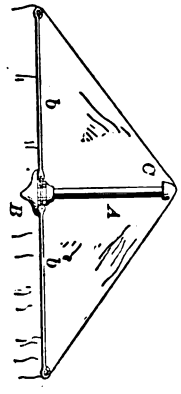

88521—Sherwood & Fitzgerald—*Safe.*

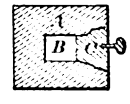

88520—R. Salter—*Gas Cooler and Washer.*

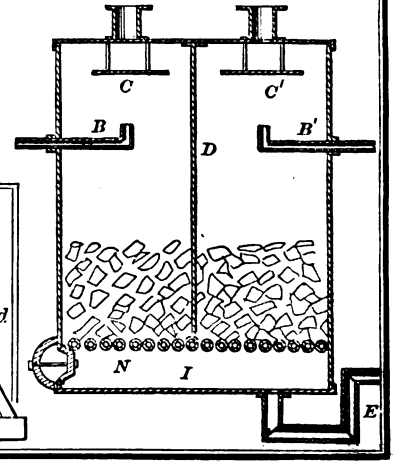

88517—R. W. Russell—*Steam Fibre Gun.*

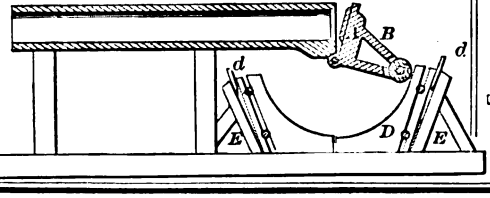

88522—D. H. Shirley—*Piano Forte Action.*

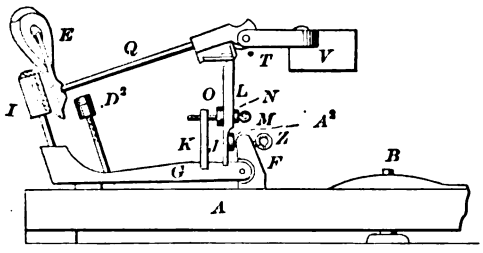

88523—S. C. H. Smith—*Fence.*

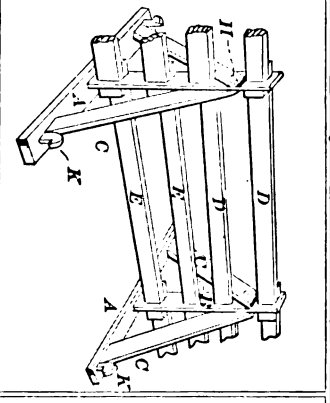

88524—R. S. Stenton—*For Steel.*

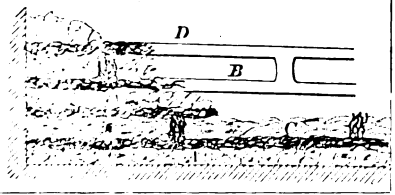

88525—H. Springer—*For Sowing Grass Seed.*

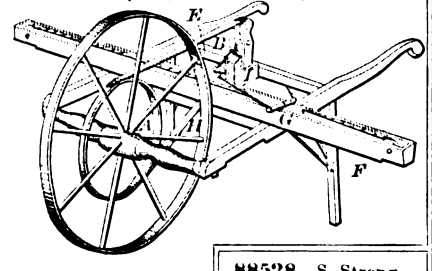

88526—J. J. St. Ledger—*Trap.*

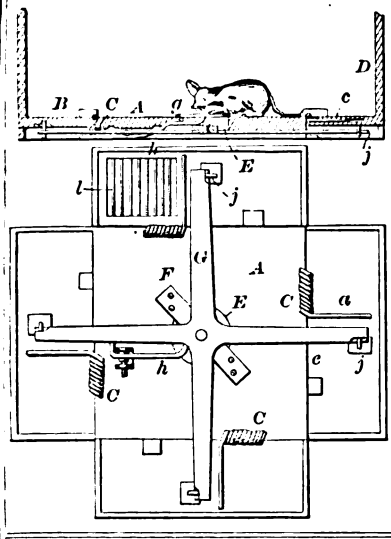

88527—C. C. Stremme—*Hat Ventilator.*

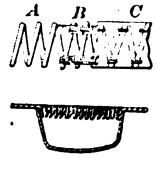

88528—S. Strong—

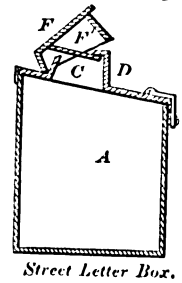

Street Letter Box.

88529—J. A. Tice—*Churn.*

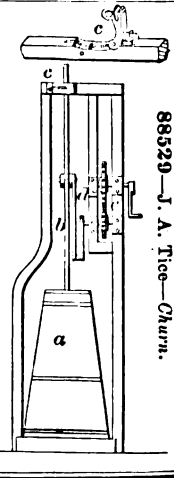

88530—A. L. Varney—*Fire Arm.*

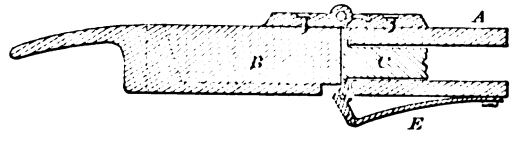

88531—A. L. Varney—*Fire Arm.*

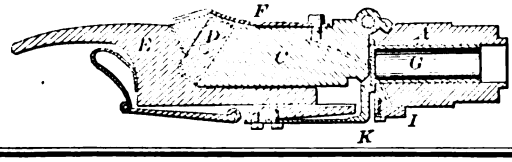

88562—H. E. Goble—*Neck Yoke.*

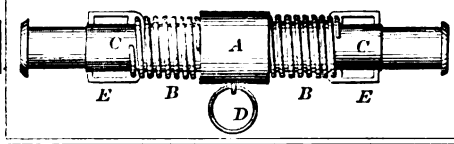

88565—G. A. & J. B. Harris—*Shutter Operator and Fastener.*

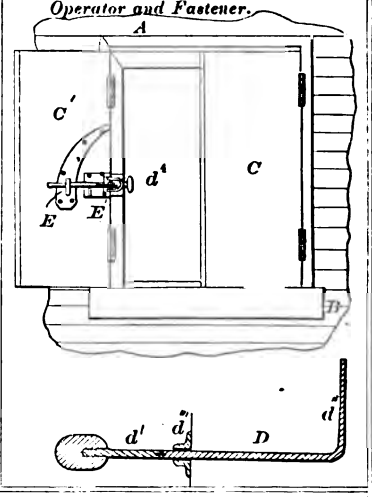

88566—E. Hause—*Clothes Dryer.*

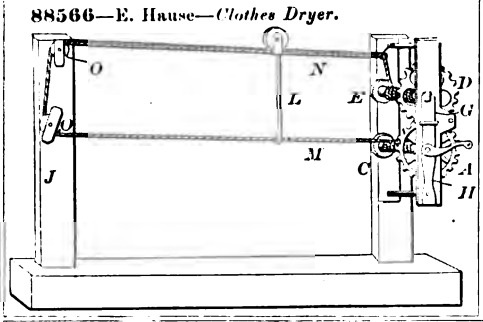

88564—E. Grosjean—*Barrel Truck.*

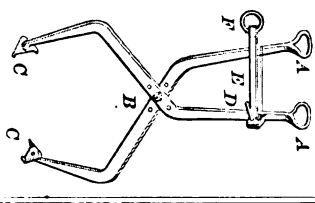

88563—G. H. Grant—*School Desk and Seat.*

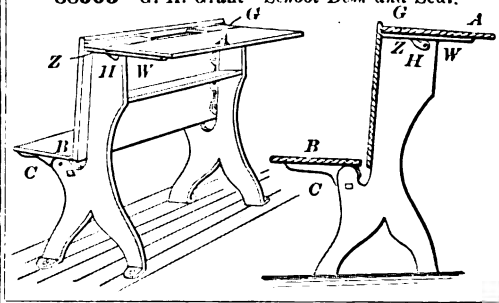

88567—V. S. Herzog—*Hinge.*

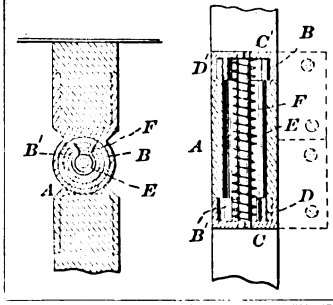

88569—Hill, Ostrander & Spink—*Farm Gate.*

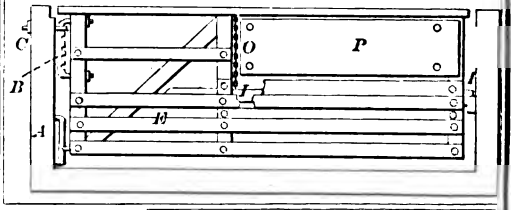

88568—C. Hess—*Churn.*

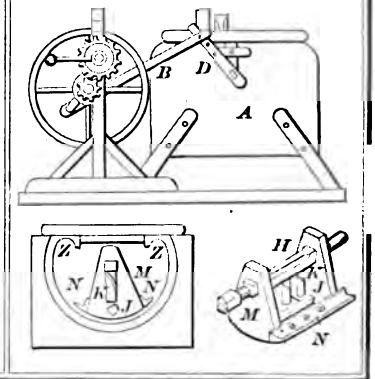

88571—J. B. Hopkins—*Anchor Tripper.*

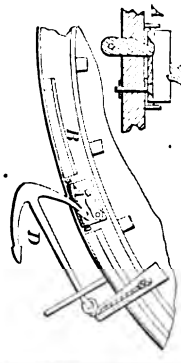

88572—J. Johnston—*Weather Strip.*

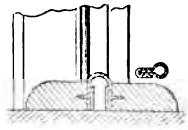

88573—M. Judd—*Sash Holder.*

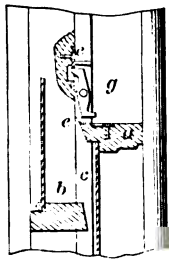

88574—W. Lindon—*Velocipede.*

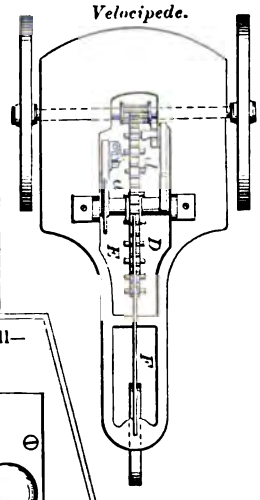

88575—S. L. Marsden—*Gate.*

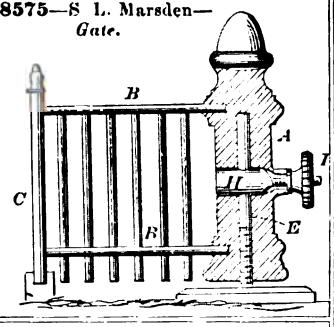

88576—G. Mason—*For Braiding.*

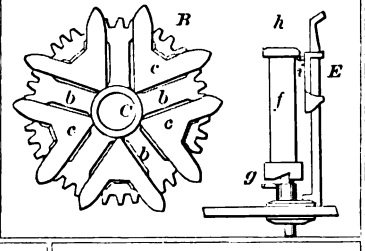

88577—R. McDowell—*Door Lock.*

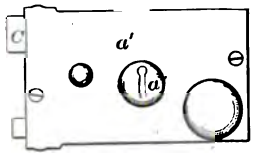

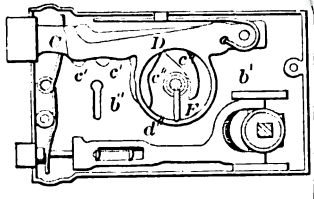

88582—H. M. Paine—*Comb.*

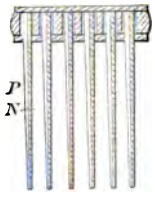

88578—I. S. Miller—

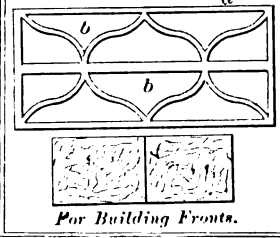

For Building Fronts.

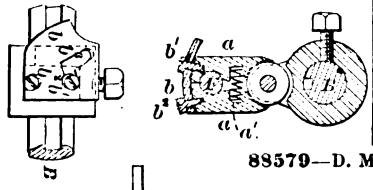

88580—C. G. Nye—*Teasel Trimmer.*

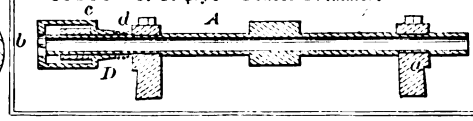

88579—D. Murphy—*Hub Boring Machine.*

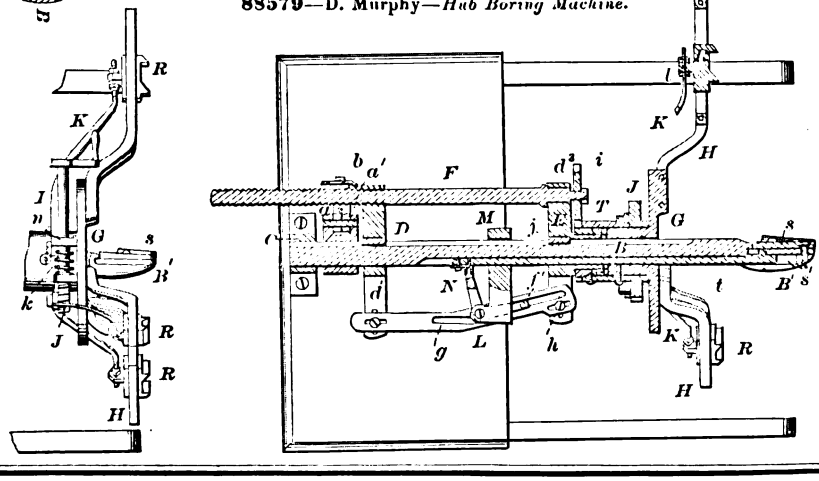

88581—D. O. Paige—*Lock.*

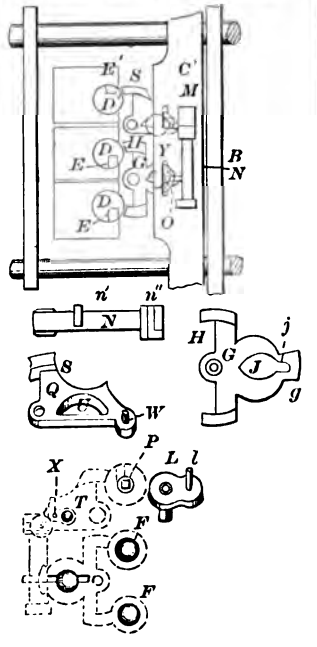

88583—W. M. Parker—*Fire Extinguisher.*

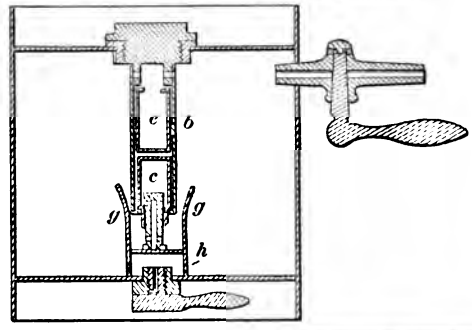

88588—W. H. Sellers—*Peg Cutter. for Boots and Shoes.*

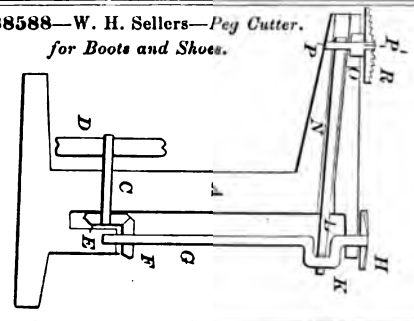

88586—J. Rice—*Felloe Sawing Machine.*

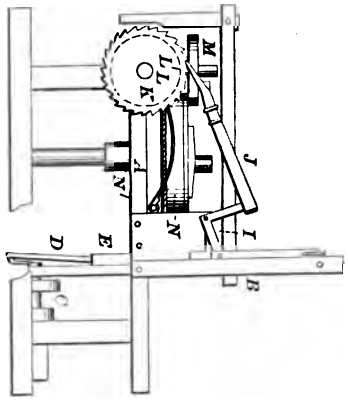

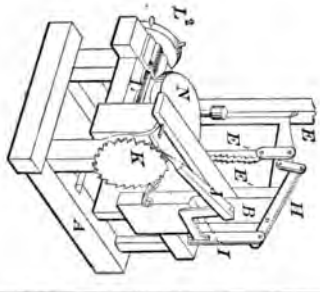

88589—J. W. Slocum—*Hydrant*

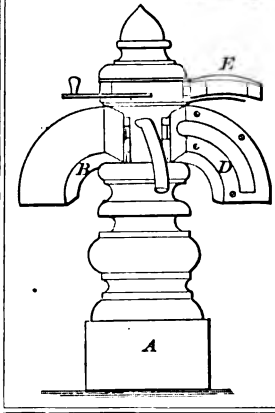

88587—J. Schlichting—*Bookbinders' Head Band.*

88584—Pietsch & Walter—*Beer Cooler.*

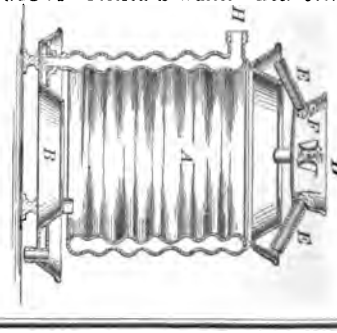

88591—B. L. Tibbetts—*Hoe and Fork.*

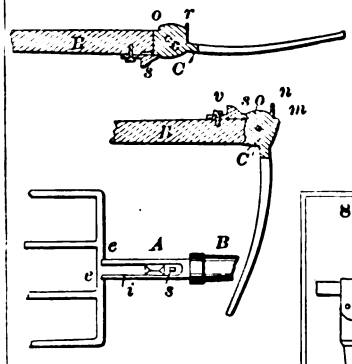

88592—P. J. Tillmann—*Door Pulley.*

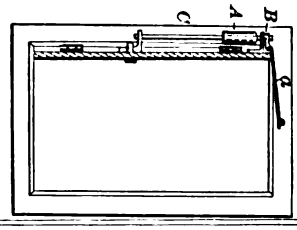

88594—I. W. Valance—*Quilting Frame.*

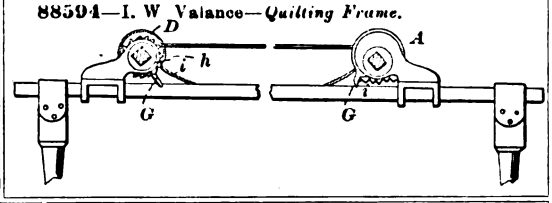

88593—J. F. Troxel—*Horse Hay Fork.*

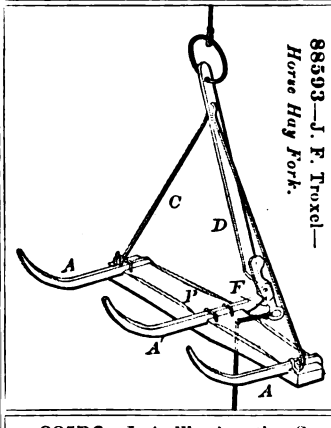

88595—C. Ward—*Propeller.*

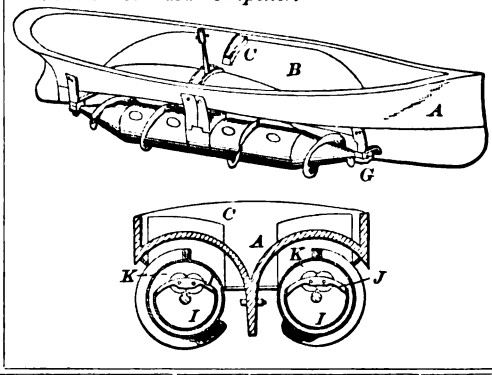

88596—J. A. Woodworth—*Stump Extractor.*

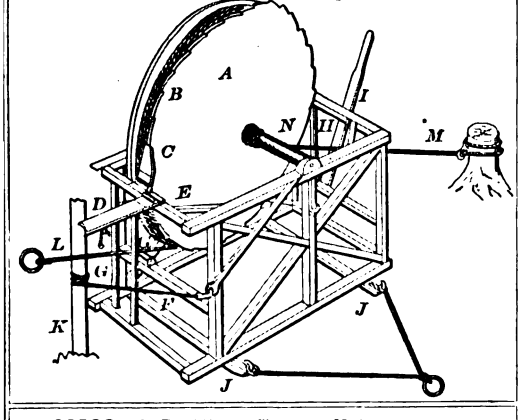

88597—R. H. Wright—*Carriage Top.*

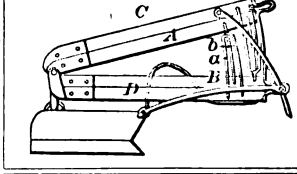

88598—H. B. Adams—*Fluting Machine.*

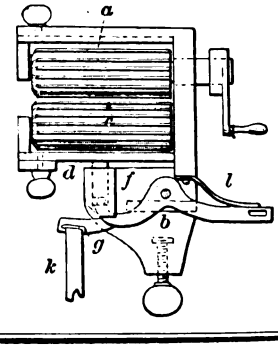

88599—C. D. Allen—*Throttle Valve.*

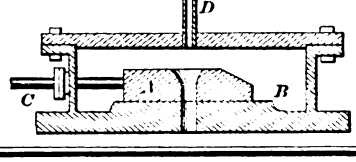

88600—Allen & Valiquette—*Railroad Car Buffer.*

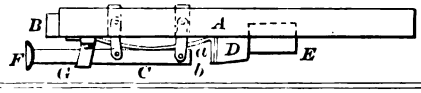

88603—C. E. Billings—*Sewing Machine.*

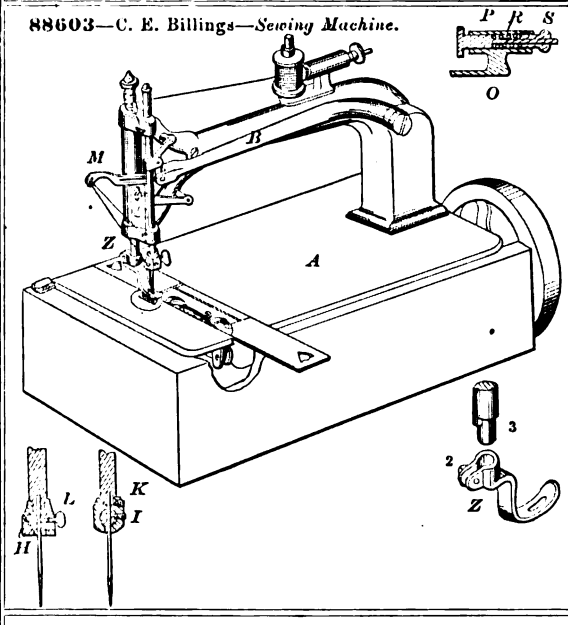

88605—W. Briggs—*Fire Arm.*

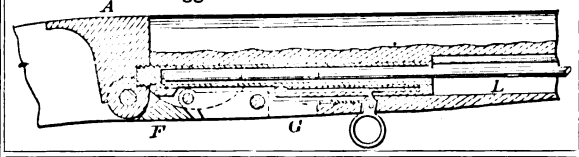

88604—N. Breed—*Corn Planter.*

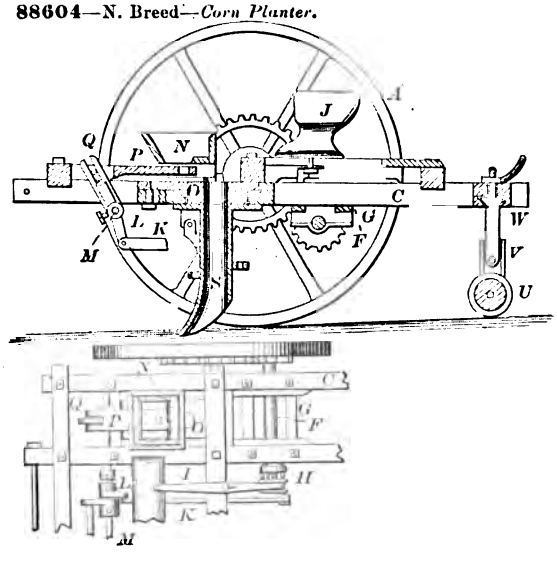

88606—J. Bryant—*Line Holder.*

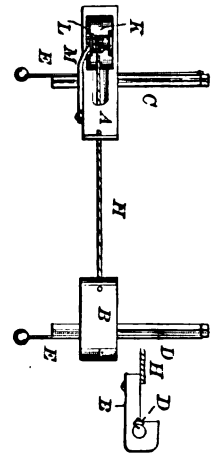

88601—B. Auerbach—*Attaching Sleigh Runners to Street Cars.*

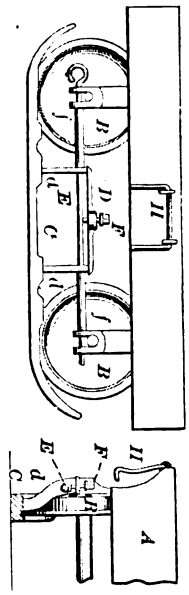

88602—J. S. Barnum—*For Securing Springs to Bed Bottoms and Mattresses.*

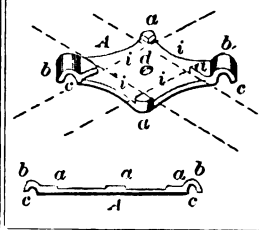

88607—G. Burson—*Hand Corn Planter.*

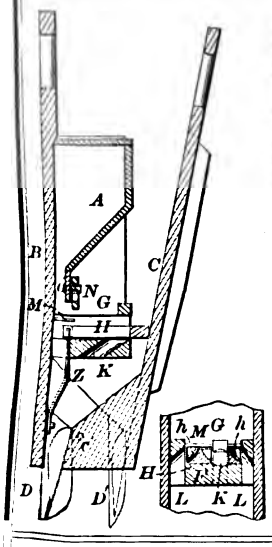

88608—A. L. Carrier—*Toy Pistol.*

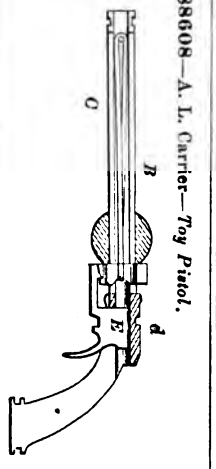

88609—A. Chandler—*Desk.*

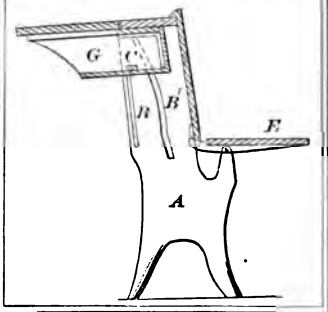

88610—C. J. Converse—*Siphon Bottle.*

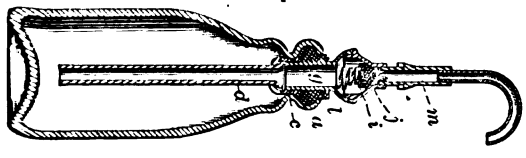

88611—R. A. Copeland—*Ferrule for Boiler Tubes.*

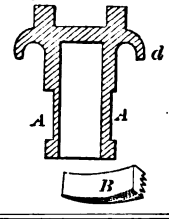

88612—L. B. Crittenden—*Coffee Roaster.*

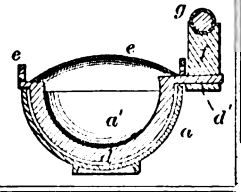

88613—I. Curtis—*Potato Digger.*

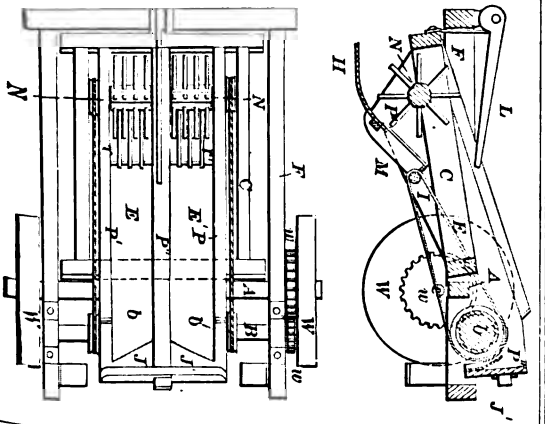

88614—Z. Dixon—*Tea Kettle Breast.*

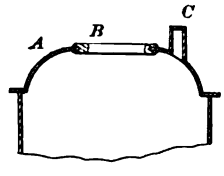

88615—T. J. Dobbs—*For Unspiking Guns.*

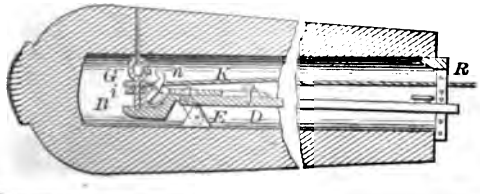

88616—R. L. Dodge—*Ladder.*

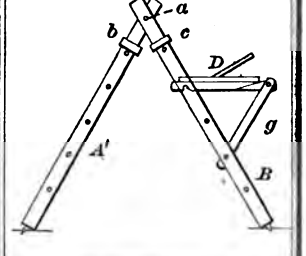

88617—J. Doering—*Bedstead Fastener.*

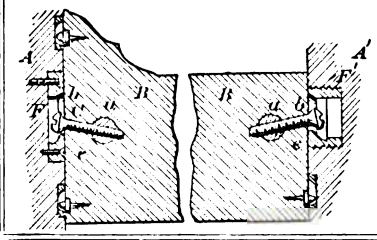

88618—J. D. Field—*Rain Water Conductor.*

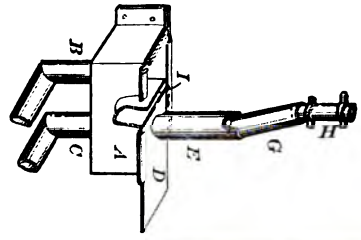

88619—L. Friedner—*Link for Clevis.*

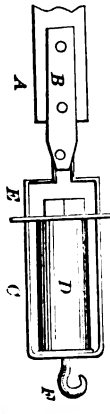

88620—A. Friedmann—*Steam Pump.*

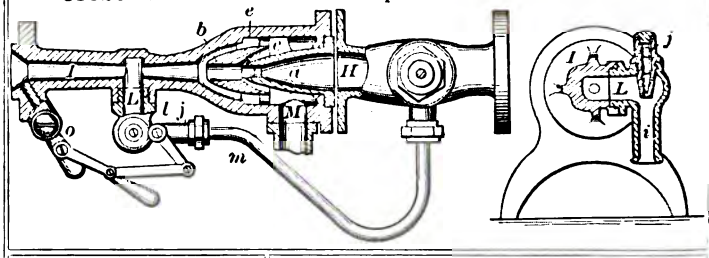

88621—E. Froggatt—*Wrench and Pincers.*

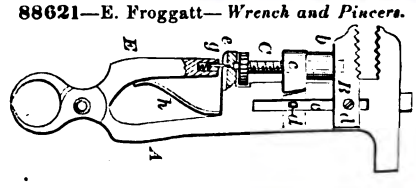

88622—E. Gallier—*Marine Furniture.*

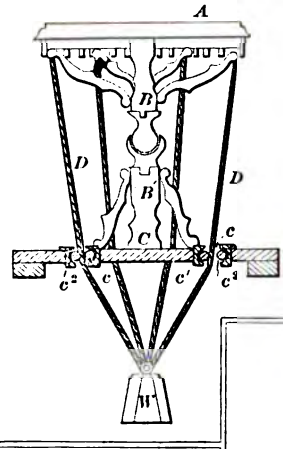

88623—G. P. Ganster—*Wrench.*

88624—J. Gatchell—*Templet for Bending Springs.*

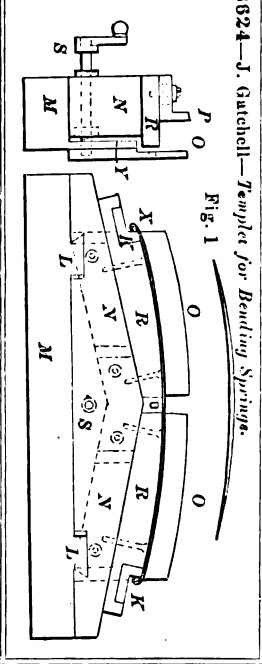

Fig. 1

88625—W. Gilfillan—*Door Spring.*

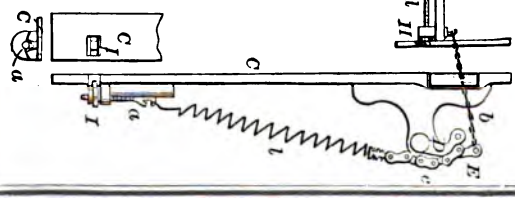

88626—J. W. Gillespie—*Eaves Trough Bracket.*

88627—A. J. Going—*Cotton Cultivator.*

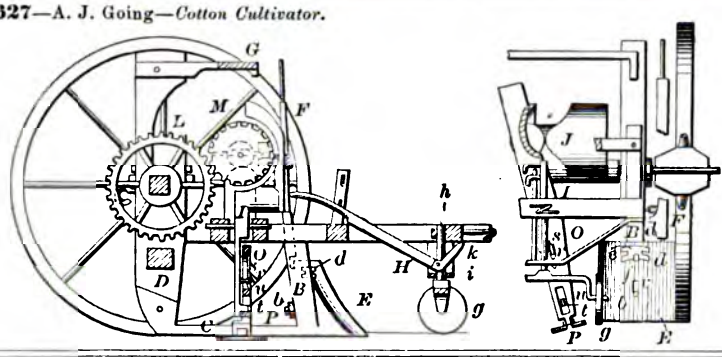

88628—T. F. & E. C. Goodwin & Goin—*Ship's Rudder.*

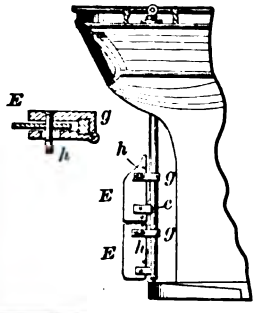

88630—H. M. Hall—*Sewing Machine Attachment.*

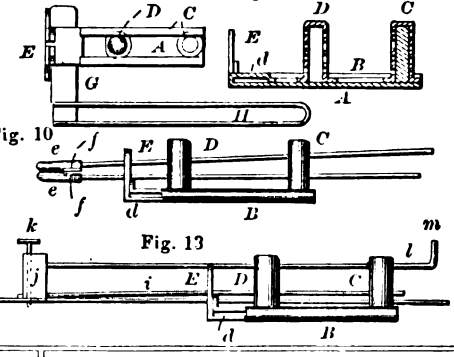

88629—I. S. Goolman—*Churn Power.*

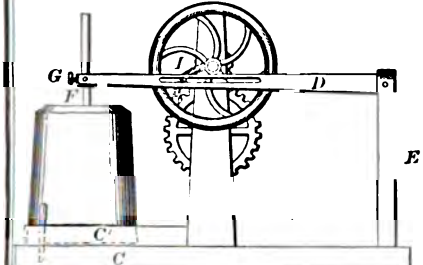

83631—Hawse & Shippy—*Clothes Dryer.*

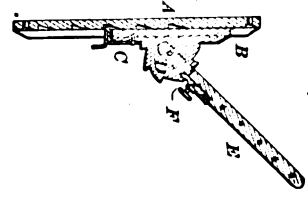

88637—S. Jackson—*Carriage.*

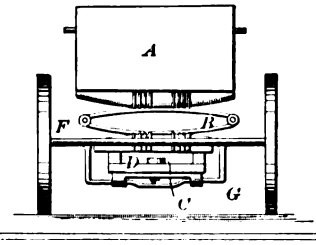

88635—W. B. Ingram—*For Grinding and Cleaning Card Cylinders.*

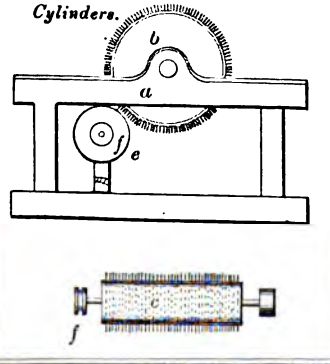

88632—J. Hooper—*Attachment for Screws.*

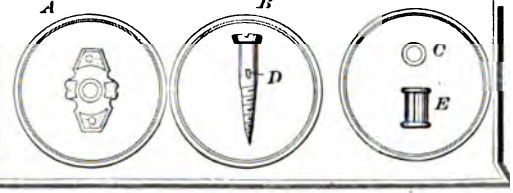

88617—J. Doering—*Bedstead Fastener.*

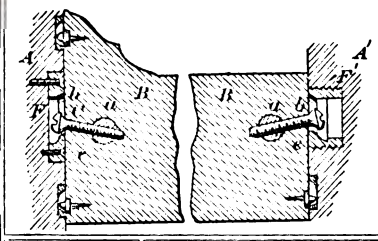

88618—J. D. Field—*Rain Water Conductor.*

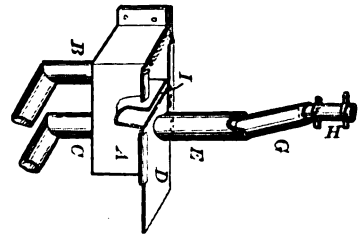

88619—L. Friedner—*Link for Clevis.*

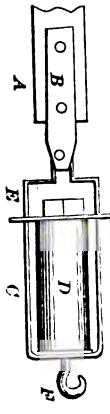

88620—A. Friedmann—*Steam Pump.*

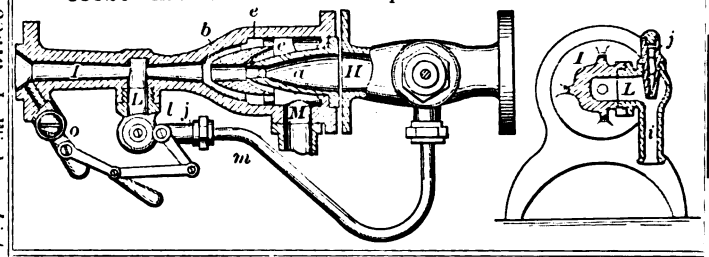

88621—E. Froggatt—*Wrench and Pincers.*

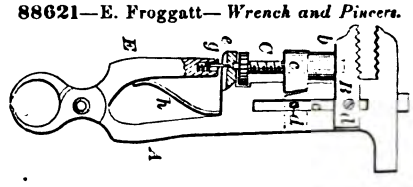

88622—E. Gallier—*Marine Furniture.*

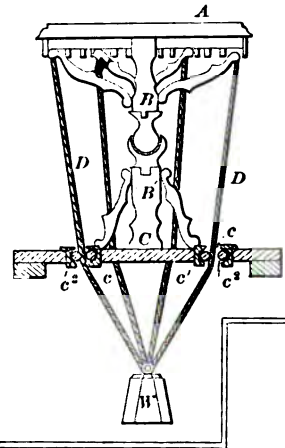

88623—G. P. Ganster—*Wrench.*

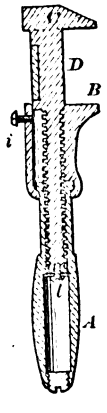

88624—J. Gatchell—*Templet for Bending Springs.*

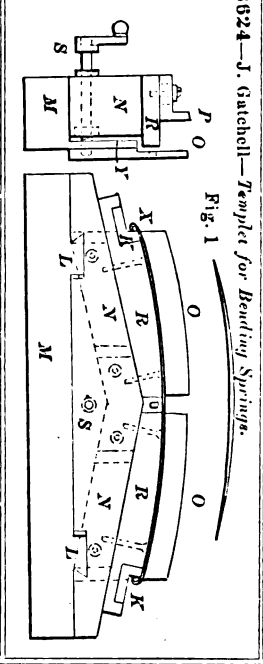

Fig. 1

88625—W. Gilfillan—*Door Spring.*

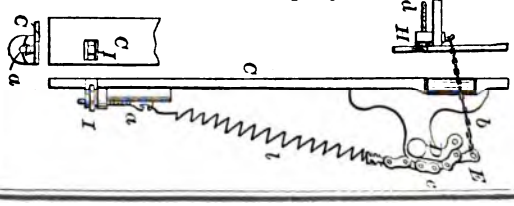

88626—J. W. Gillespie—*Eaves Trough Bracket.*

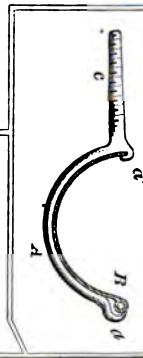

88646—J. Lick—*For Gilding.*

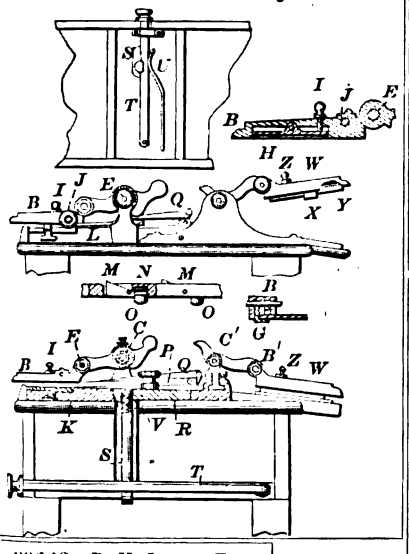

88647—Lindsey & Sullivan—*Fruit Crate.*

Fig 2

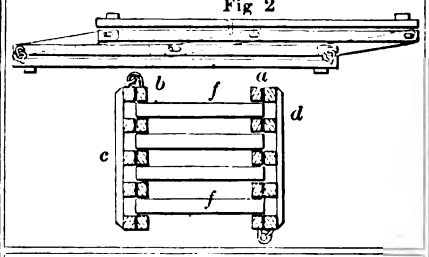

88649—J. B. Machamer—*Index for Filing Circular Saws.*

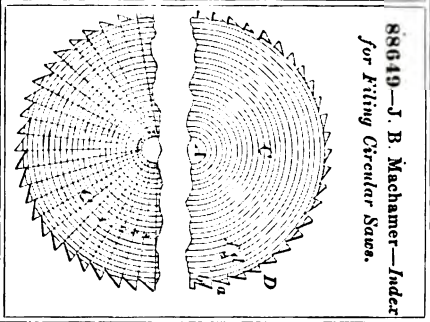

88648—R. H. Long—*Fare Box.*

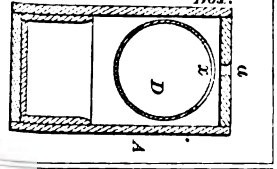

88651—D. W. Marshall—*Picture Frame.*

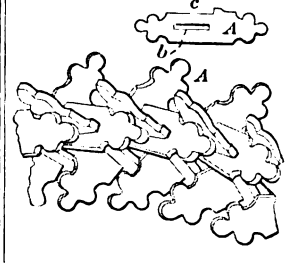

88650—C. D. Mansfield—*Mowing Machine.*

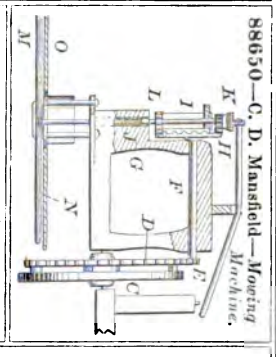

88652—H. W. Mather—*For Forging Nails.*

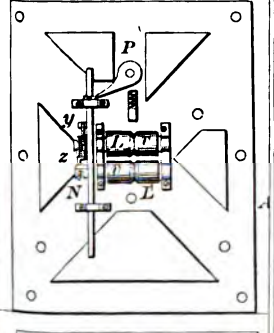

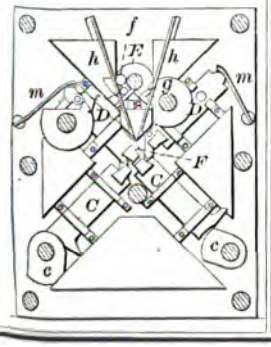

88653—N. F. Mathewson—*Mowing Machine.*

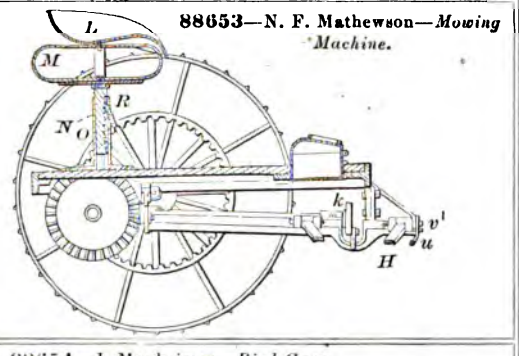

88654—J. Maxheimer—*Bird Cage.*

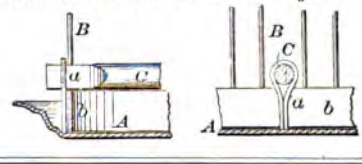

88655—Maxson & Kinyon—*Sled Brake.*

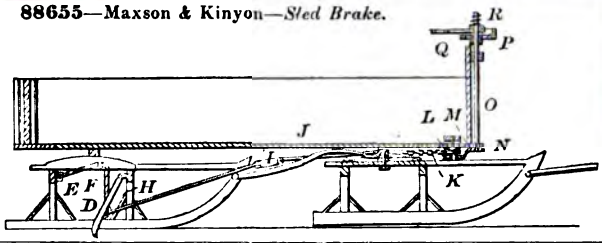

88656—Odermatt & Ettlin—*Fountain Pen.*

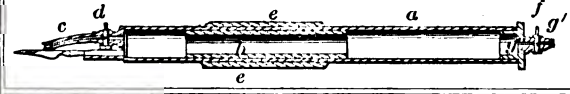

88659—J. S. Munger—*Hoe.*

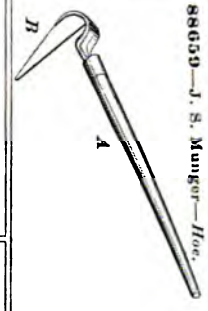

88657—W. R. Mears—*Portable House.*

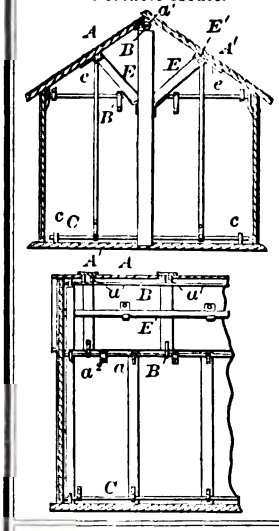

88665—Parham & Smith—*Needle Holder.*

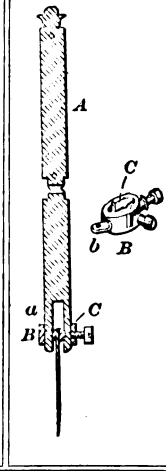

88662—J. E. Overacker—*Churn.*

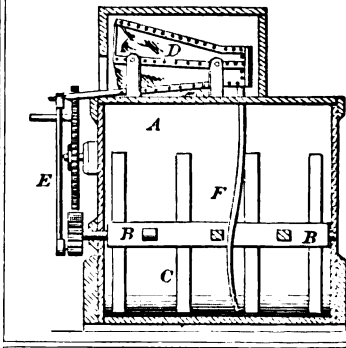

88663—G. N. Palmer—*Washing Machine.*

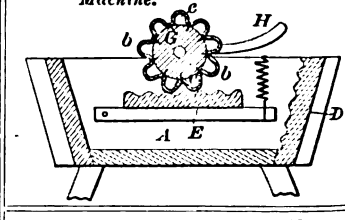

88666—J. G. Perry—*Meat Cutter.*

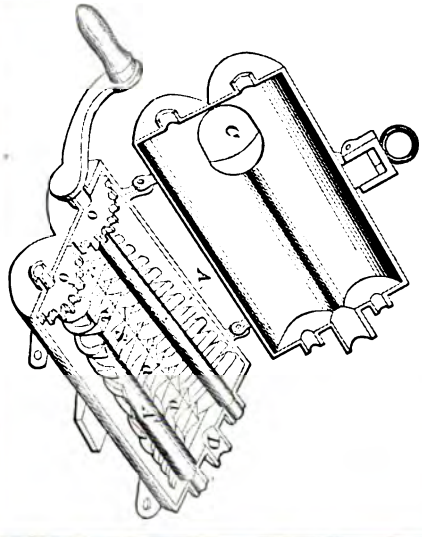

88664—L. E. Palmer—*For Mowing Away Hay.*

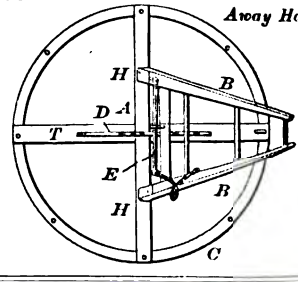

88668—P. Philippi—*Nut Locking Device.*

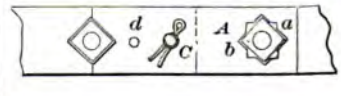

88667—J. G. Perry—*Meat Cutter.*

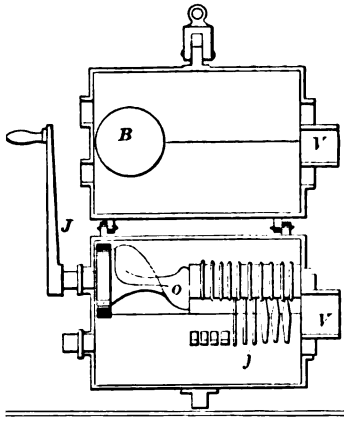

88669—Ross & Mitchell—*Harrow and Cultivator.*

Fig. 2.

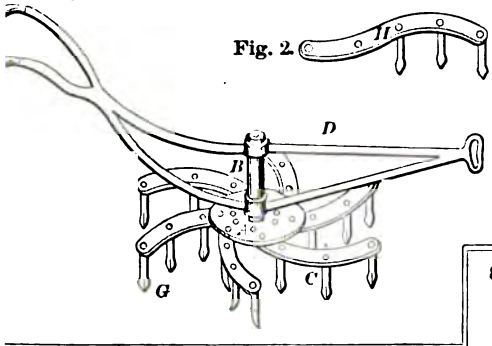

88670—D. H. A. Sanders—*Cotton Seed Planter.*

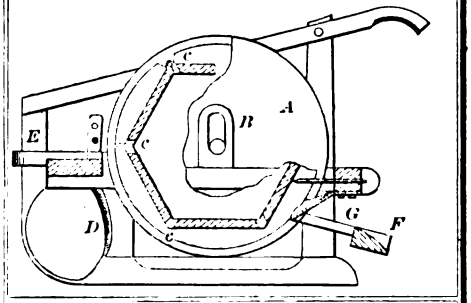

88671—H. Schulte—*Window Shade Fixture.*

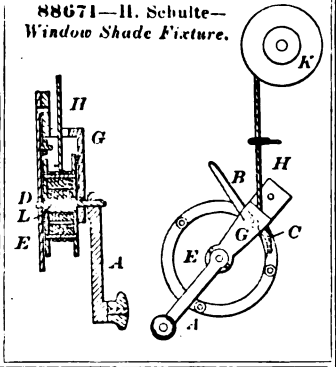

88672—C. F. A. Seitz—*Egg Beater.*

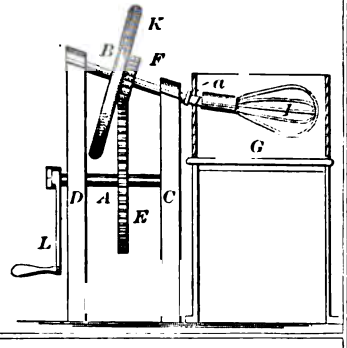

88673—S. B. Shoup—*Flood Gate.*

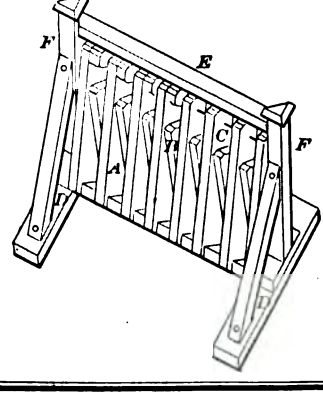

88675—J. F. Stokes—*Car Starter.*

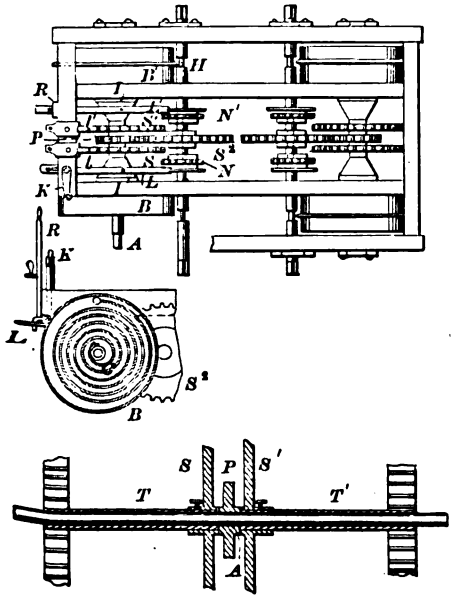

88674—W. Silver—*For Blasting and other Powder.*

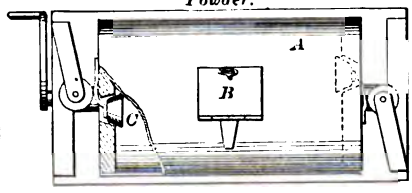

88677—Tallman & De Puy—*Milk Cooler.*

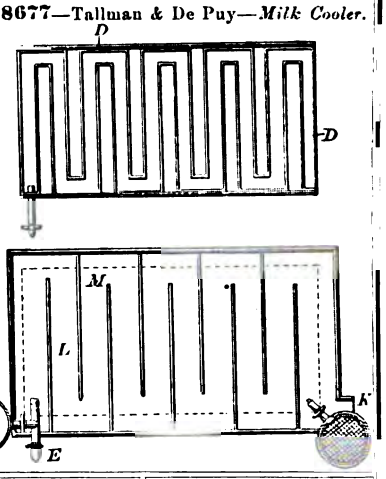

88679—H. K. Trask—*For Grinding Edged Tools.*

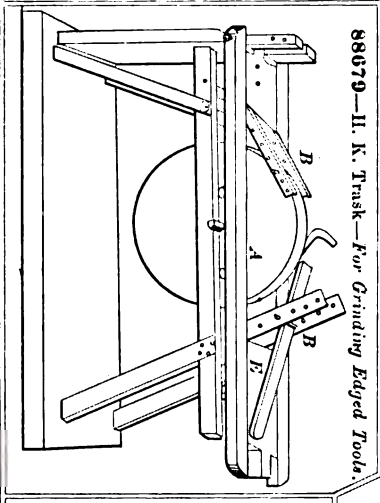

88676—Z. T. Sweet—*Clip for Neck Yokes*

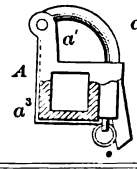

88683—T. W. Ward—*Velocipede.*

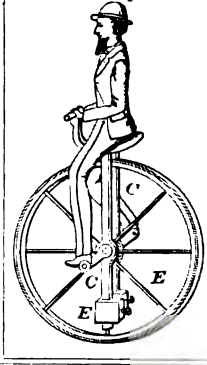

88682—H. Twitchell—*Dental Plate.*

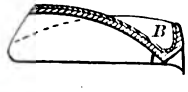

88678—N. S. Thomas—*For Tan Bark.*

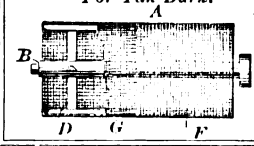

88684—W. C. Wendell—*Book Cover.*

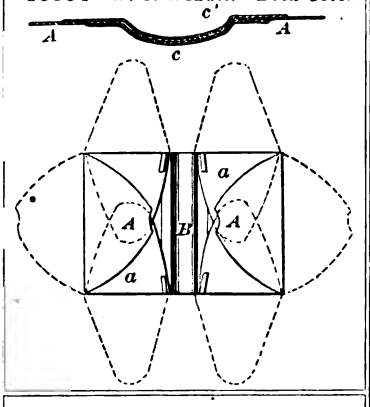

88685—G. W. Williamson—*Railway Car Couch.*

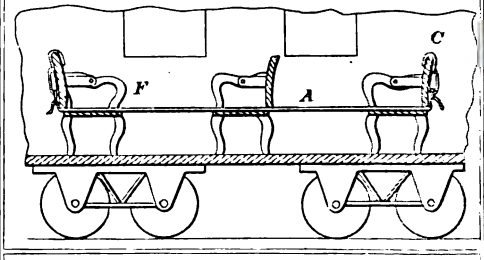

88686—J W. Wilson—*Road Scraper.*

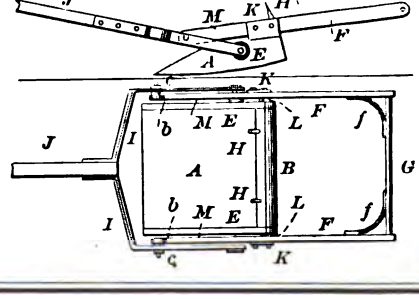

88689—J. Absterdam—*Projectile.*

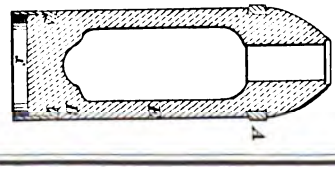

88687—J. C. Wilson—*Tuyere.*

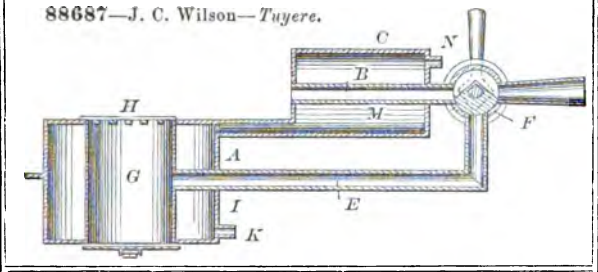

88688—Withers & Dolfinger—*Churn Dasher.*

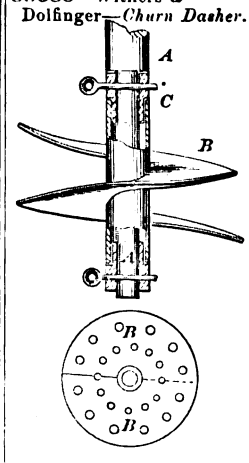

88690—P. Barker—*Grain Separator.*

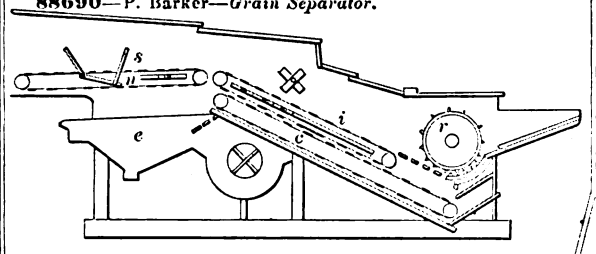

Fig. 3

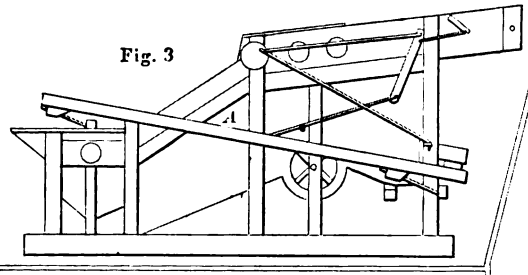

88692—J. Bond—*Life Preserving Apparatus.*

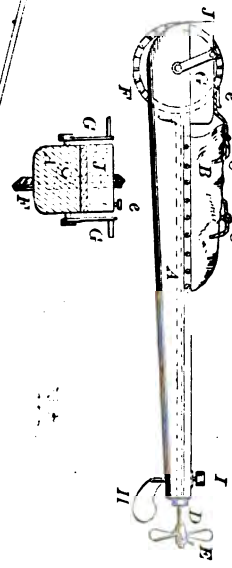

88691—G. S. Barton—*For Adjusting Gearing.*

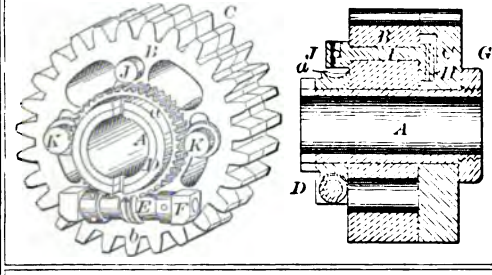

88693—N. H. Borgfeldt—*For Melting Snow.*

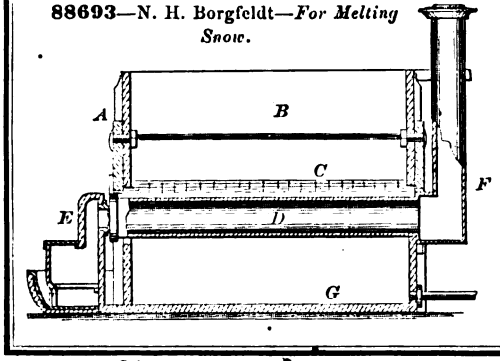

88694—H. J. Brunner—*Steam Generator.*

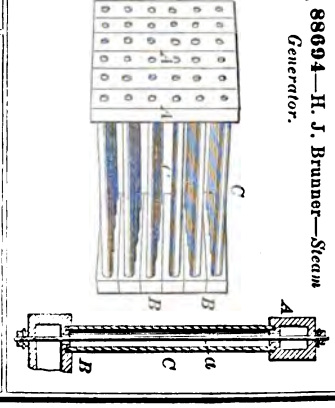

88695—W. J. Davidson—*Syringe.*

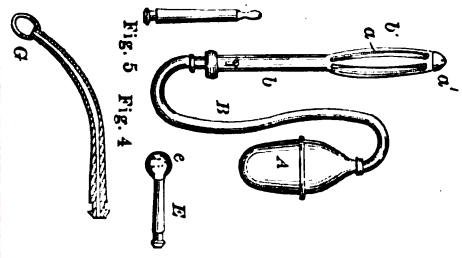

88697—H. Dawson—*For Stretching Leather.*

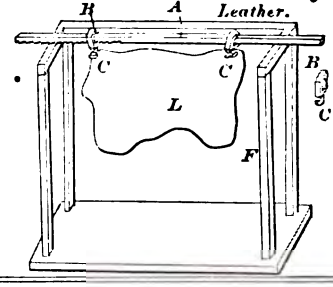

88698—C. Dion—*Fire Alarm.*

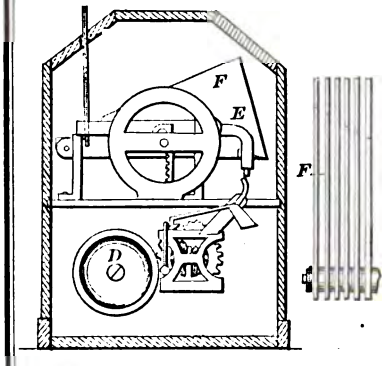

88699—H. W. Dopp—*Needle Threader for Sewing Machines.*

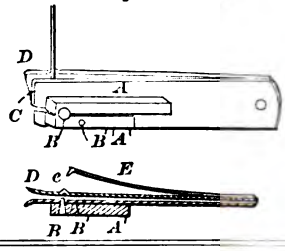

88704—J. B. Foote—*Sled Way Attachment for Covered Roadways.*

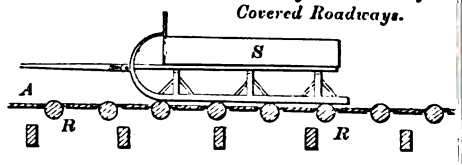

88696—C H. Davis—*Rock Drill.*

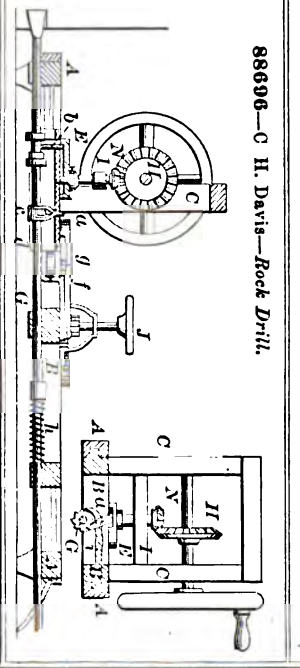

88700—E. P. Eastwick—*Bone Black Kiln.*

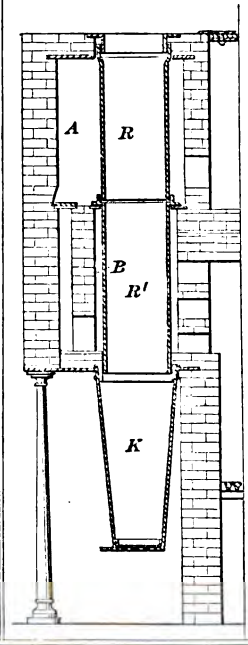

88701—E. P. Eastwick—*Bone Black Kiln.*

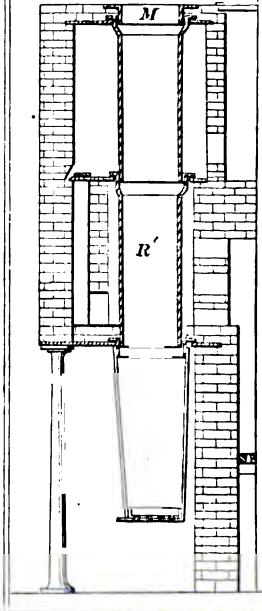

88702—E. P. Eastwick—*Bone Black Kiln.*

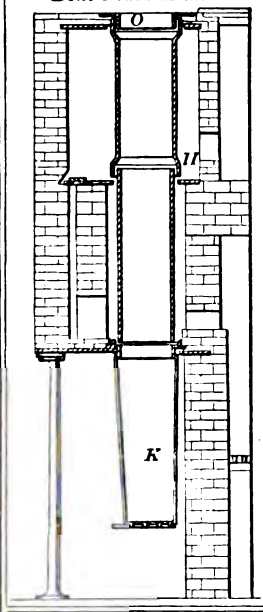

88703—H. J. Ferguson—*Velocipede.*

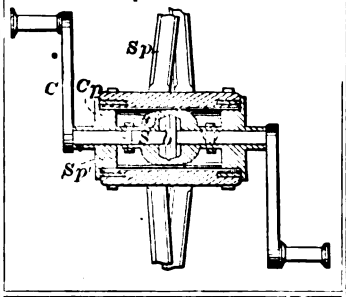

88705—C. M. Foulke—*Wheel.*

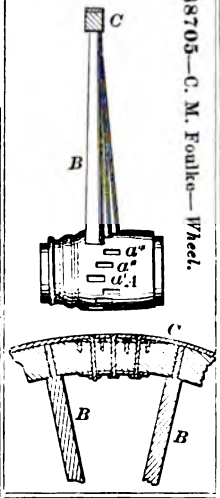

88713—T. Houghton—*Lantern.*

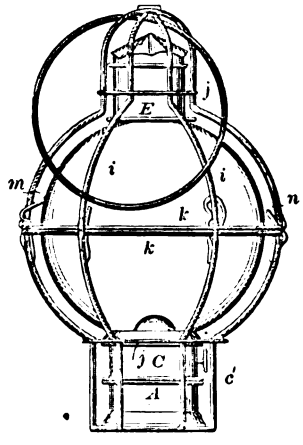

88708—H. L. Hall—*Corn Husker.*

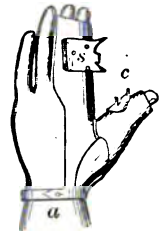

88709—A. Heaton—*Fluid Meter.*

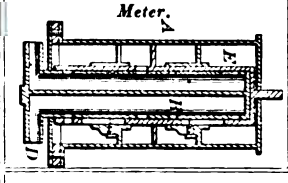

88710—P. F. Hodges—*Grain Drill.*

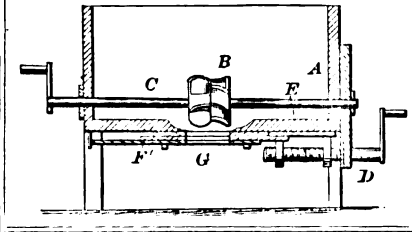

88712—P. J. Hogan—*Trowel.*

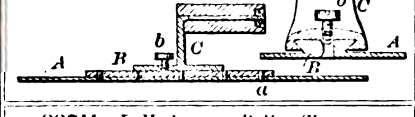

88711—I. Hodgson—*Roller Skate.*

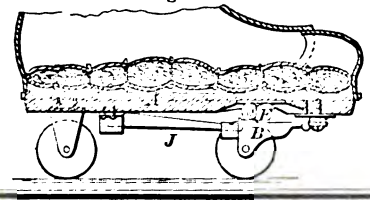

88707—Guthrie & Mason—*Steam Generator.*

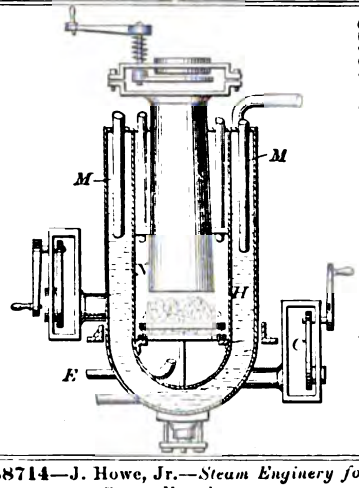

88714—J. Howe, Jr.—*Steam Engines for Steam Vessels.*

88716—S. D. Huffman—*Threshing Machine.*

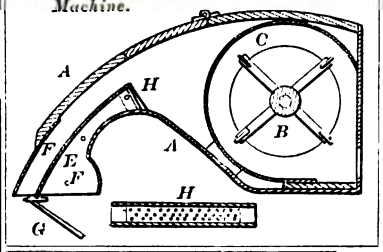

88717—A. Hunter—*Needle Threader.*

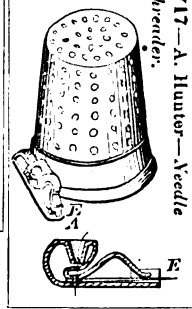

88718—C. Kallmann—*Clock and Fly Trap.*

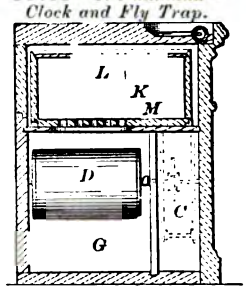

88719—C. P. Kelly—*Horse Rake.*

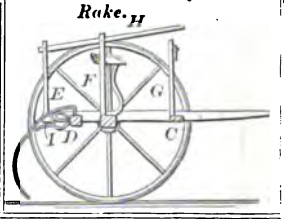

88720—G. Kenny—*Carriage Hub.*

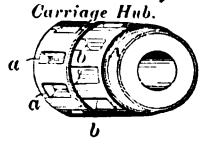

88721—A. Kessberger—*Wagon Brake.*

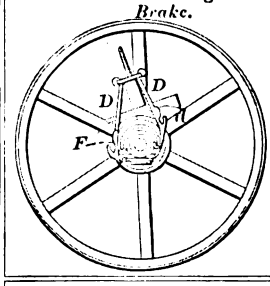

88722—Klaucke & Fraser—*Envelope.*

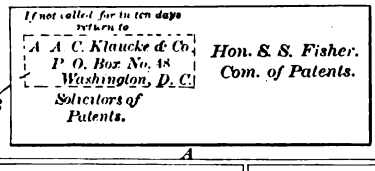

88726—H. Matthes—*Pie Cutter and Crimper.*

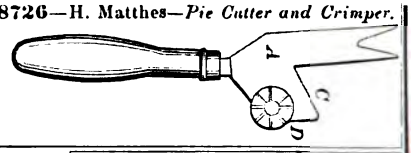

88723—E. Knepper—*Shovel Plow.*

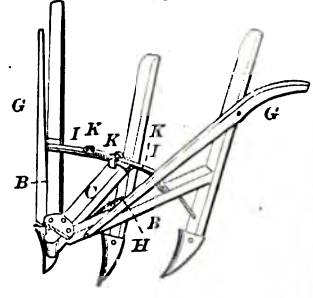

88724—W. H. Locke—*Grain Cradle.*

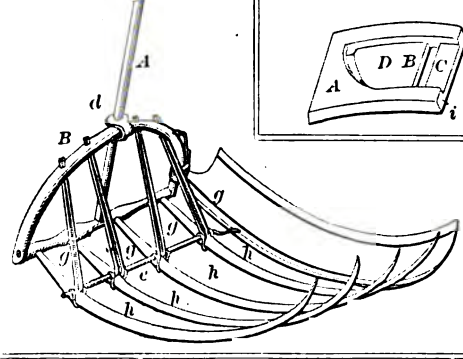

88727—W. M. Morris—*Cotton Bale Tie.*

88731—G. H. Palmer—*Suspenders.*

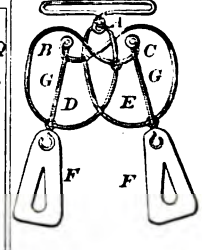

88728—G. Nearstheimer—*Coffin.*

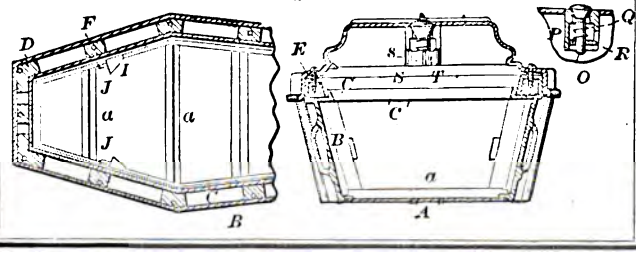

88729—G. W. Neill—*Piano Forte Frame.*

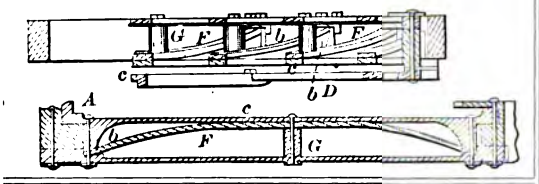

88730—J. D. S. Newell—*Fire Arm.*

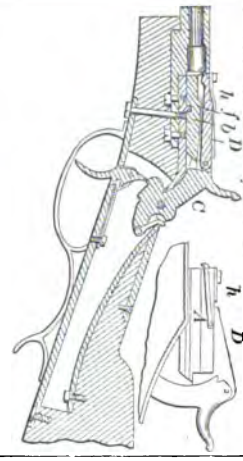

88735—J. E. Plummer—*Jack for Finishing Shoes.*

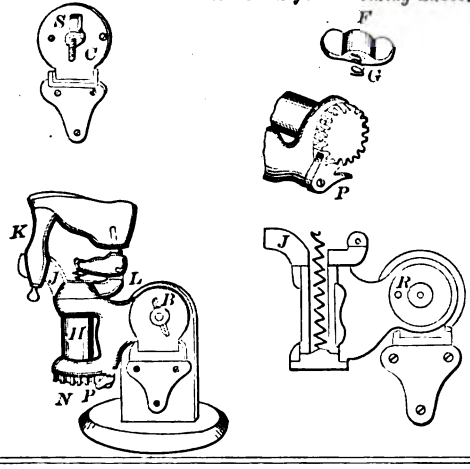

88733—R. B. Perkins—*Mechanical Adjustment.*

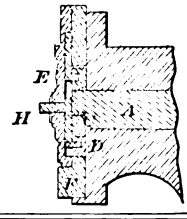

88732—W. F. Parker—*Power Press.*

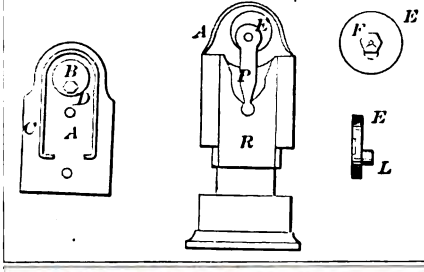

88734—R. B. Perkins—*Mechanical Adjustment.*

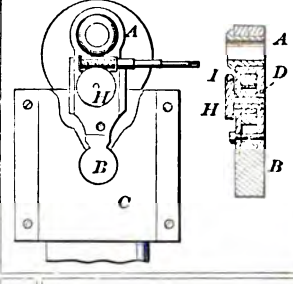

88736—A. Ray—*Car Coupling.*

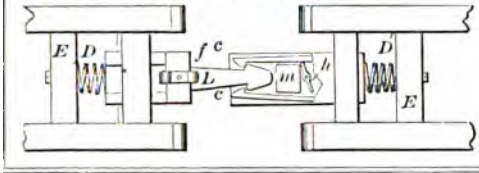

88737—F. Raymond—*Latch and Lock.*

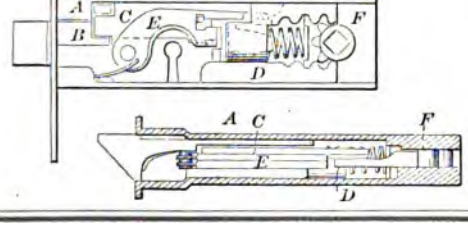

88738—J. B. Read—*Velocipede.*

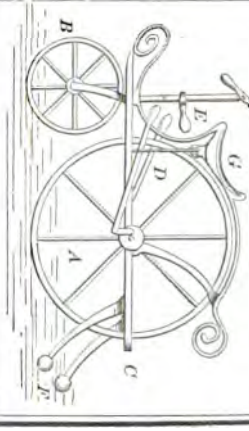

88739—W. Reichenbach—*Clothes Dryer and Ironing Table.*

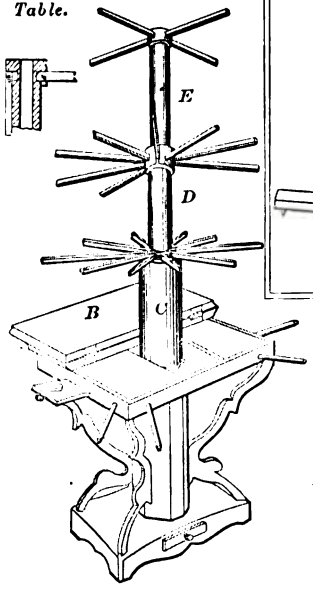

88740—E. S. Rice—*Harrow and Cultivator.*

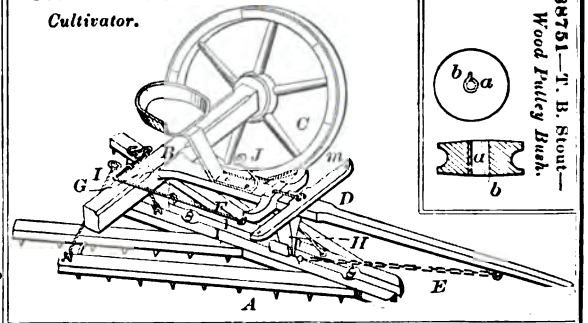

88751—T. B. Stout—*Wood Pulley Bush.*

88741—J. M. Rohrer—*For Desulphurizing and Oxidizing Ores.*

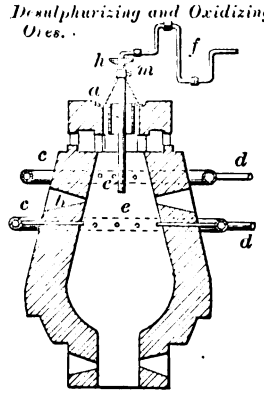

88742—C. G. Sargent—*Burring Cylinder for Wool, &c.*

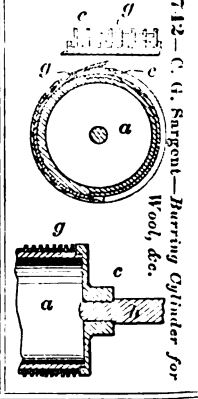

88743—Sax & Kear—*Car Wheel.*

88744—H. J. Sayers—*Damper.*

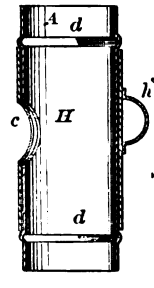

88748—C. S. Stearns—*Carriage Wheel.*

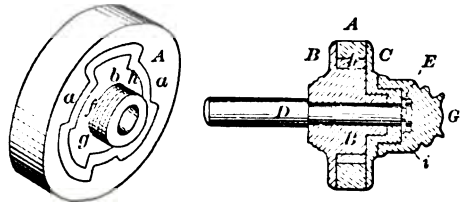

88749—C. F. Th. Steinway—*Sound Board for Piano Fortes.*

88750—C. W. Stickney—*Velocipede.*

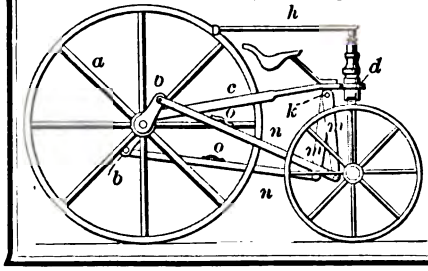

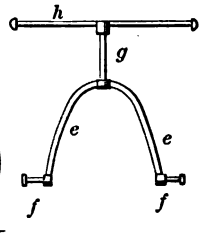

88752—F. Straus—*Corset Clasp.*

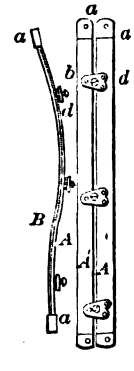

88753—J. Taggart—*For Wrought Nails.*

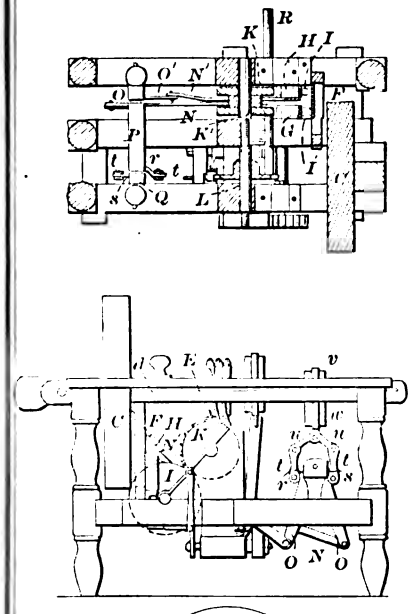

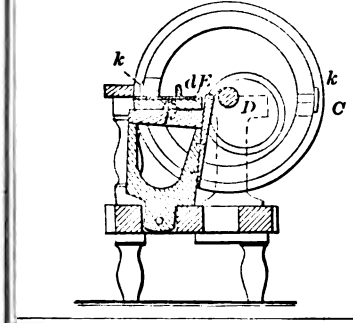

88754—A. G. Thomas—*Horse Hay Fork.*

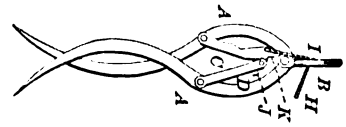

88755—N. Thomas—*Apple Slicer and Corer.*

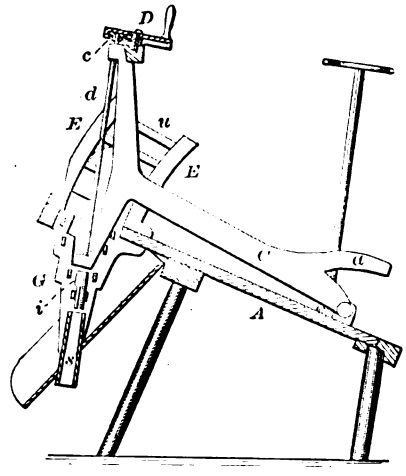

88756—E. Trump—*Parlor Game.*

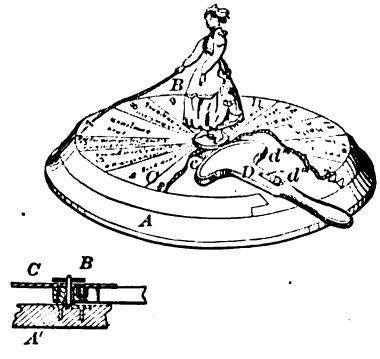

88757—W. H. Watson—*For Sheeting and Pressing Tobacco.*

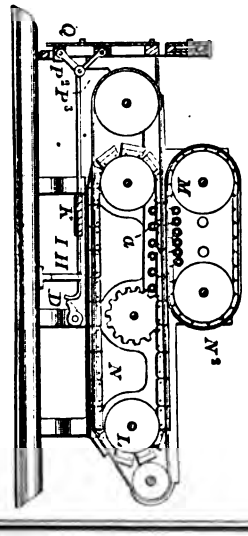

88759—J. W. Weston—*Velocipede.*

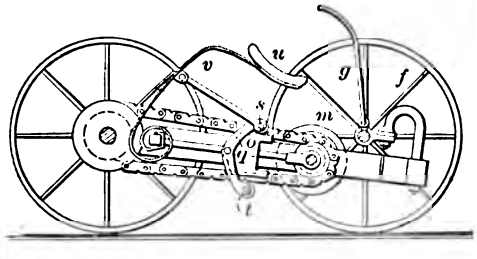

88758—H. J. Wattles—*Cultivator.*

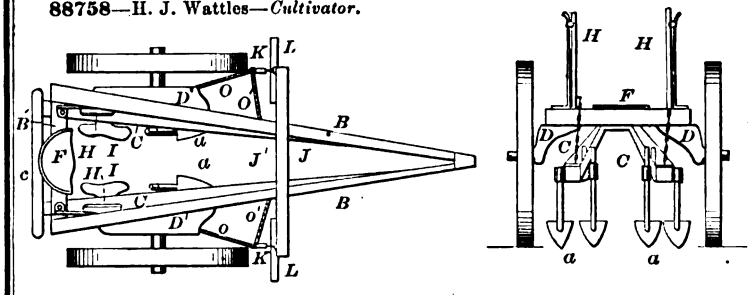

88760—C. Whitehouse—*Bit and Auger.*

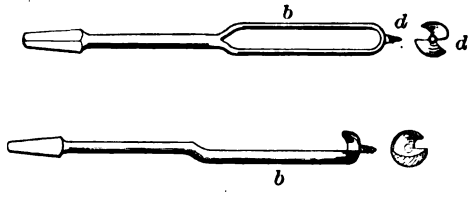

88761—C. L. Willis—*Capstan.*

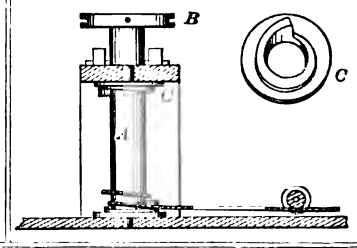

88762—B. O. Woods—*Type Case.*

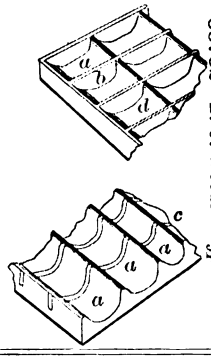

88763—A. F. Hines—*Sash Pulley.*

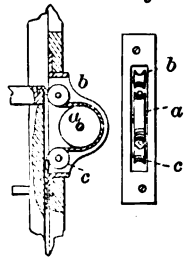

88765—D. L. De Golyer—*Pavement.*

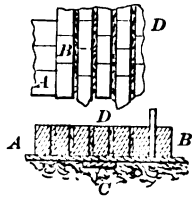

88766—J. H. Morris—*Weather Strip.*

88764—E. Lynch—*For Tanning.*

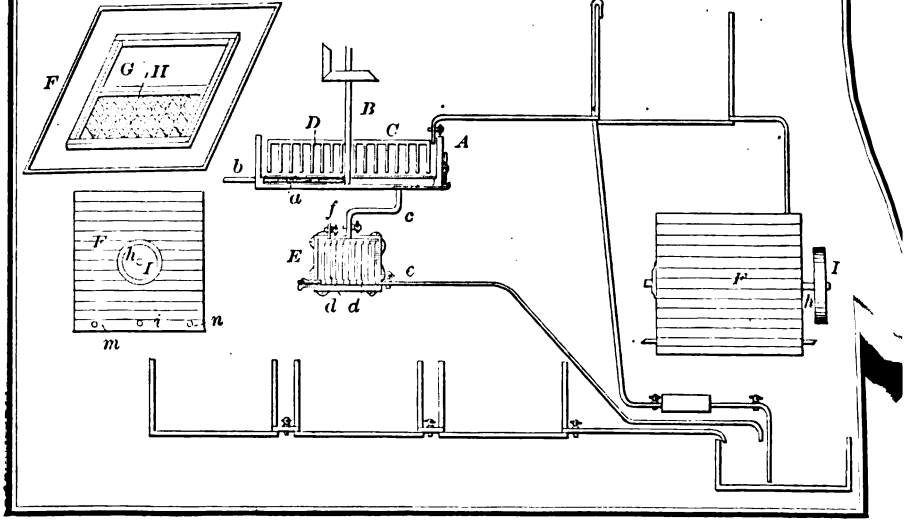

88767—J. B. Atwater—*Motive Power.*

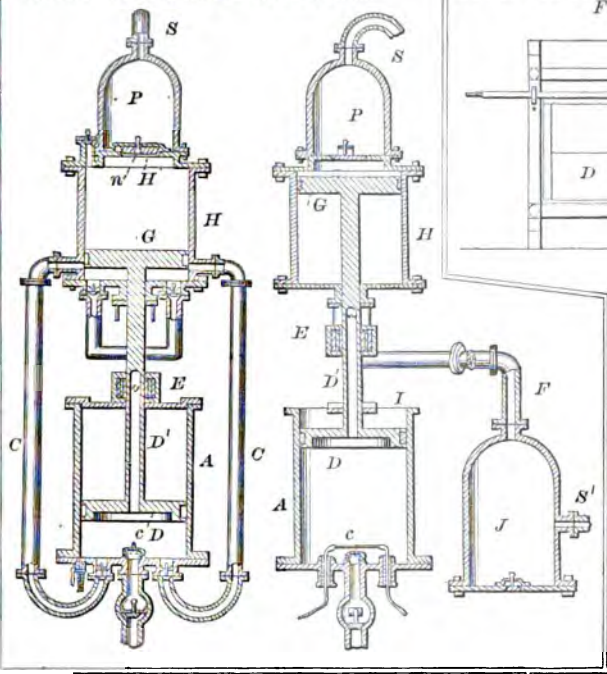

88768—A. D. Barrett—*Feeding Trough For Horses.*

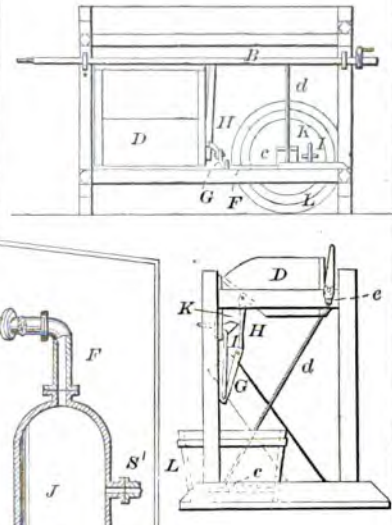

88771—R. Bowers—*Valve Gear.*

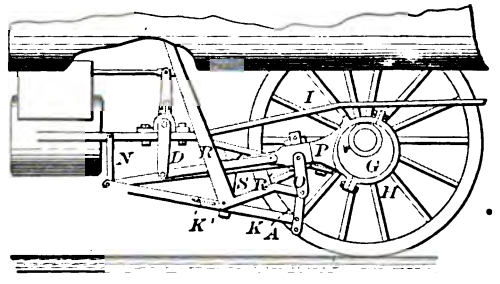

88769—Baylor & Rapp—*For Krout Cutting.*

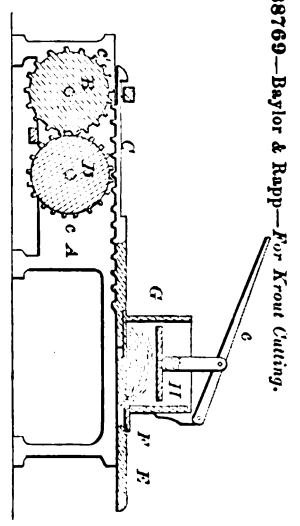

88770—J. Behel—*Gate.*

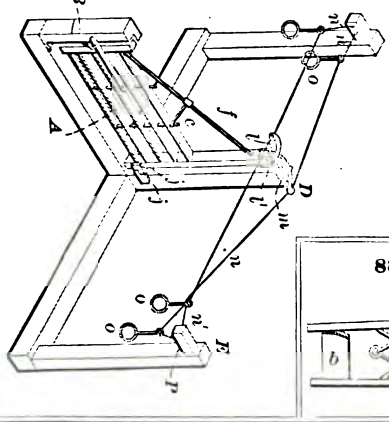

88772—C. A. Brigham—*Bed Bottom.*

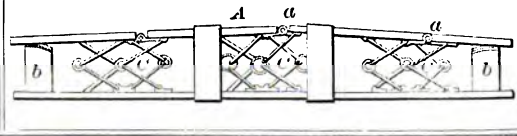

88773—L. D. Brooks—*Gate.*

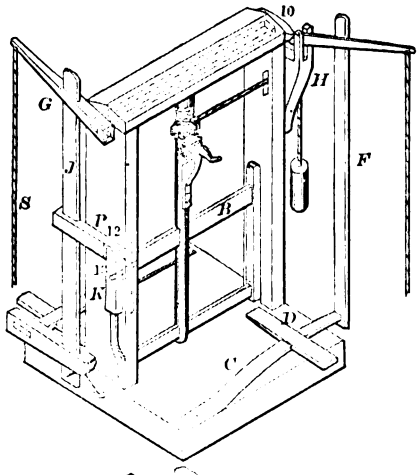

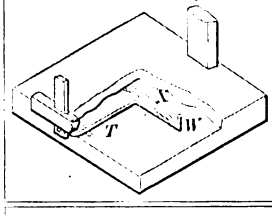

88774—D. L. F. Chase—*Boiler Feeder.*

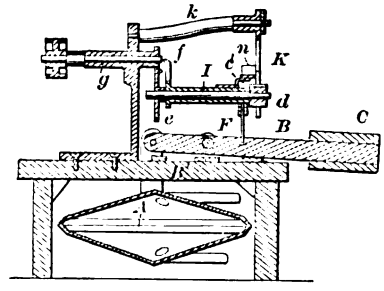

88777—L. M. Doudna—*Lid Holder.*

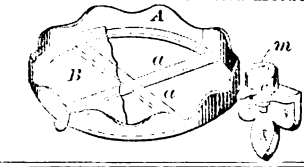

88775—P. K. Dederick—*Baling Press.*

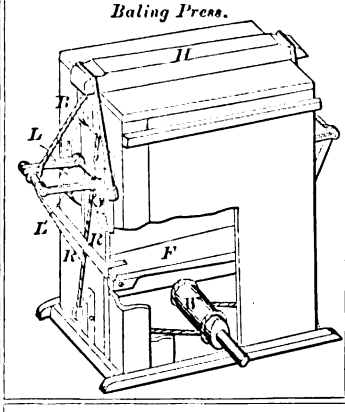

88779—Field & Nation—*For Ornamenting Candles.*

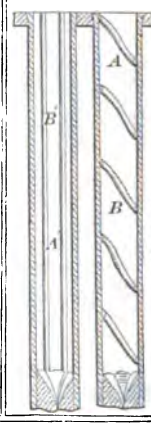

88776—C. Dieterick—*Chair.*

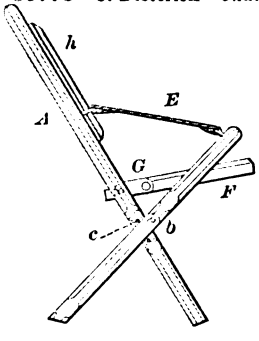

88780—H. W. Fuller—*Sewing Machine Attachment.*

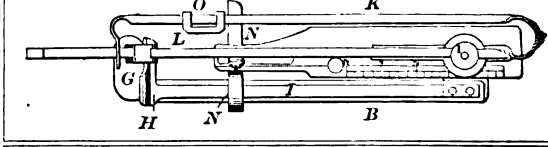

88781—J. D. Greene—*Anchor.*

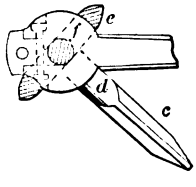

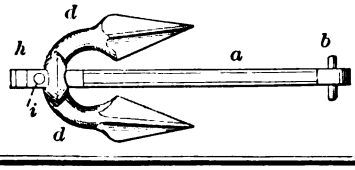

88778—J. W. Ells—*Trap.*

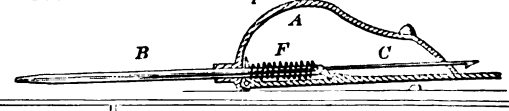

88782—F. W. Groff—*Fence.*

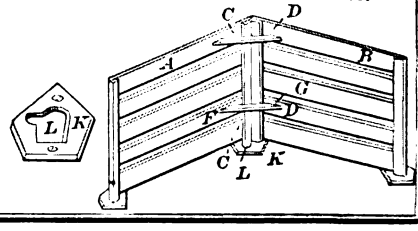

88783—M. Hardaway—*Bolt Machine.*

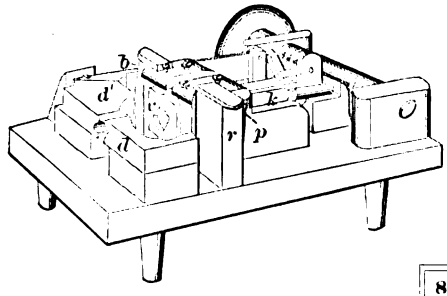

88784—M. E. Hatch—*Lamp.*

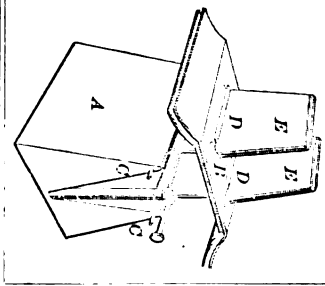

88785—J. Y. Herston—*Earth Scraper.*

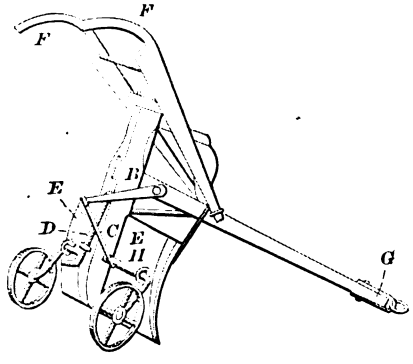

88787—Hewitt & Gorham—*Seeder and Cultivator.*

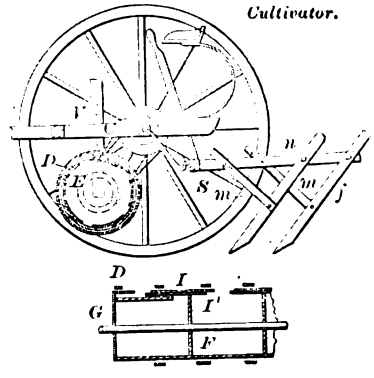

88786—C. Hewitt—*Railroad Rail.*

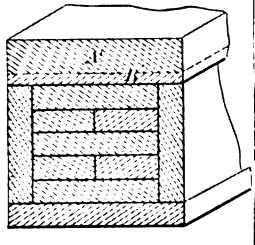

88788—W. M. Johnston—*For Casting Tuyeres.*

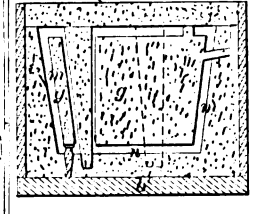

88789—Keeler & Eckert—*Carriage Jack.*

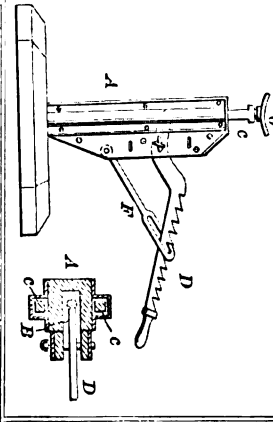

88790—E. Kelley—*Corn Sheller.*

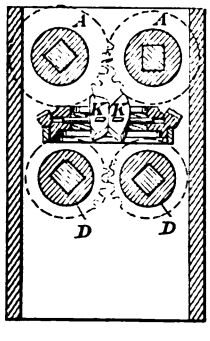

88791—J. B. Kelley—*Knob Latch and Lock.*

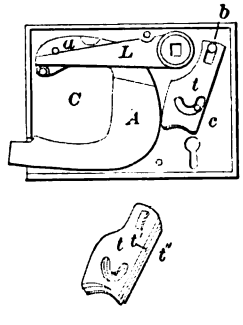

88792—I. B. Ketchum—*Flour Bolt.*

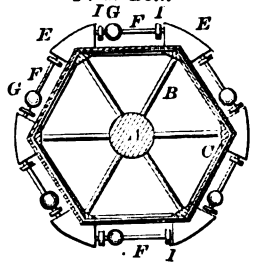

88794—B. F. Masters—*Plow.*

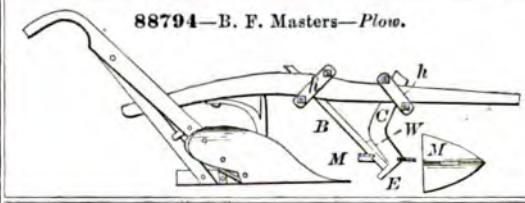

88795—C. Messenger—*For Roofing Tile.*

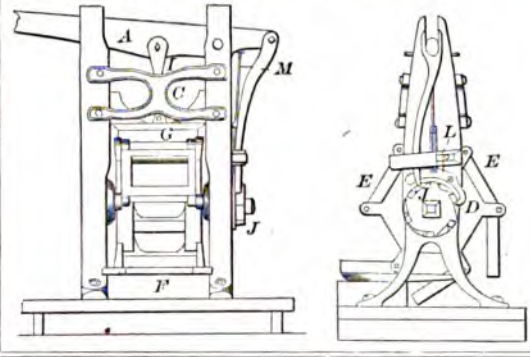

88796—C. H. Mills—*Brake.*

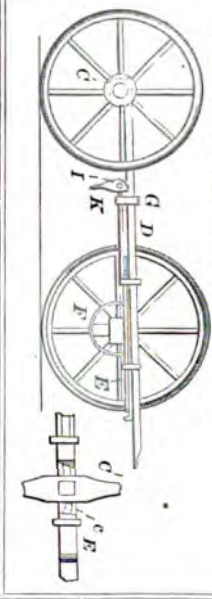

88797—S. A. Mitchell—*Brake.*

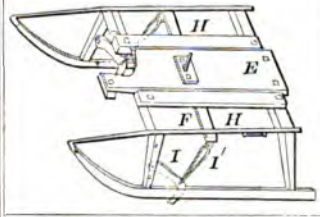

88800—F. W. Murray—*Composing Stick.*

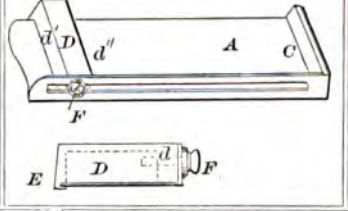

88798—G. Morrison—*Plate for Artificial Teeth.*

88799—J. Murdock—*Bird House.*

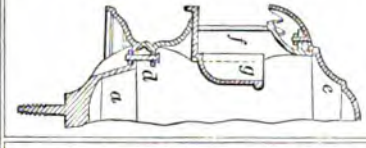

88801—J. W. Newton—*Bog Cutter and Drag.*

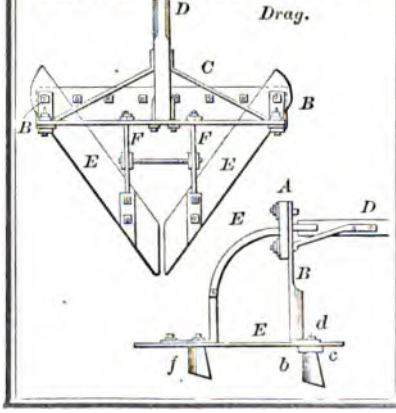

88802—J. O'Connor—*Wheelwright Machine.*

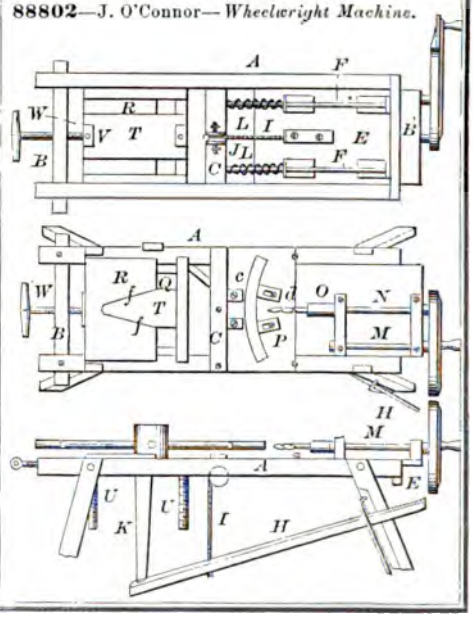

88803—Page & Miller—*Stilts.*

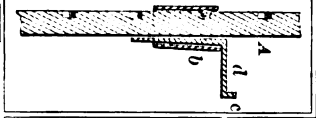

88807—J Pickles—*For the Extract of Bark.*

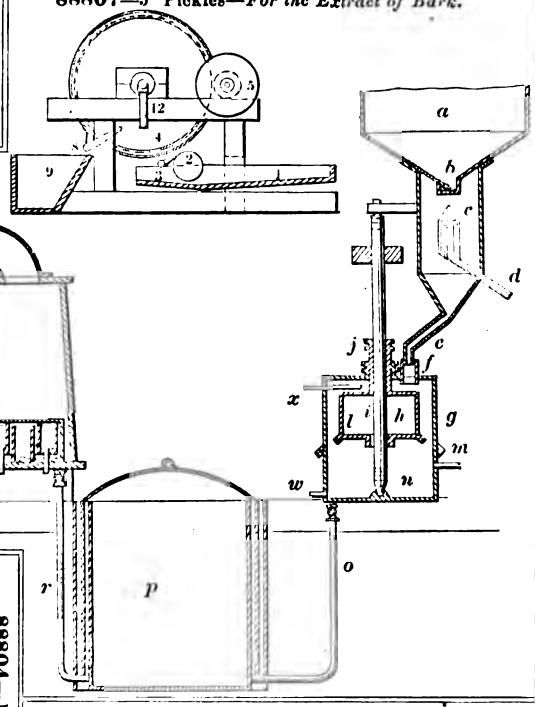

88805—E. G. Paull—*Furnace.*

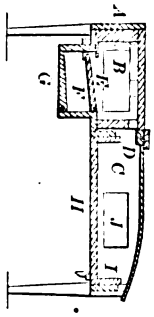

88804—J. A. Park—*Horse Hay Fork.*

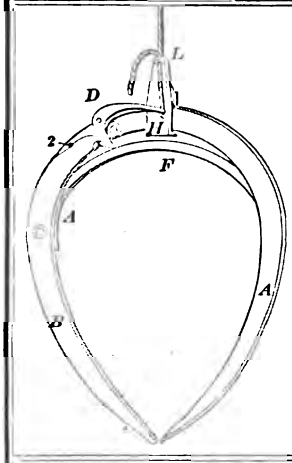

88806—S. B. Pough—*Washing Machine.*

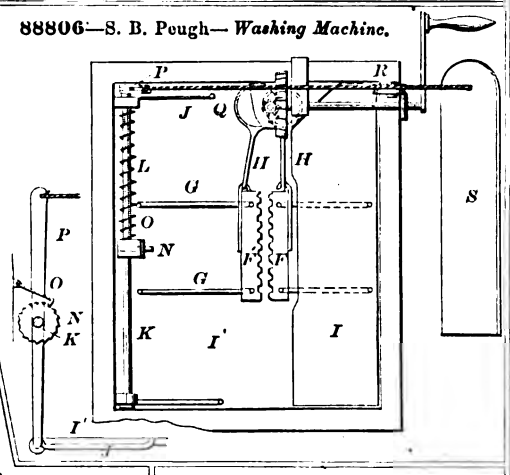

88808—Pollack & Schmidt—*Sewing Machine.*

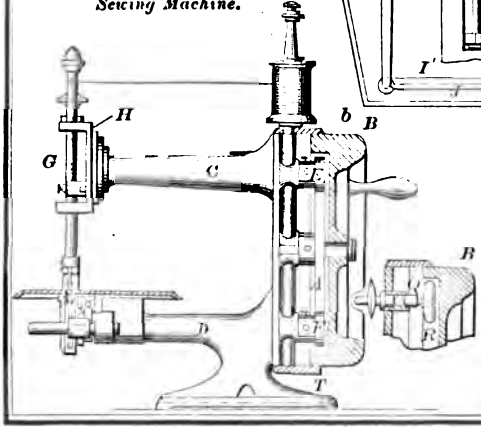

88810—C. L. Robertson—*Cutlery.*

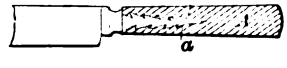

88811—C. L. Robertson—*Comb.*

88809—J. R. Richardson—*Nail Plate Feeder.*

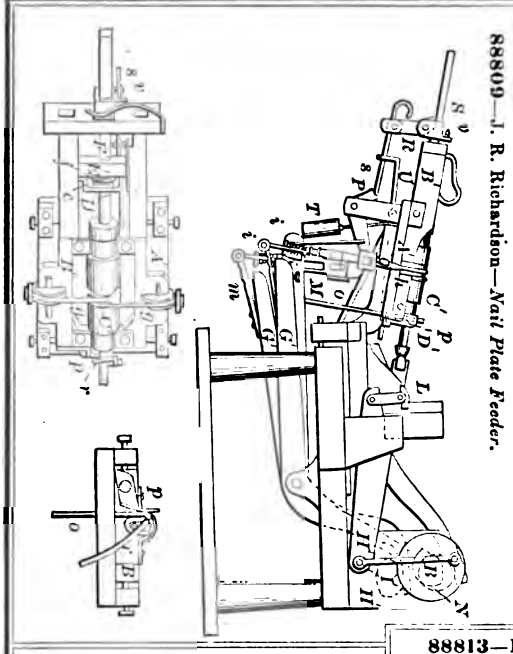

88815—S. M. Skidmore—*Velocipede.*

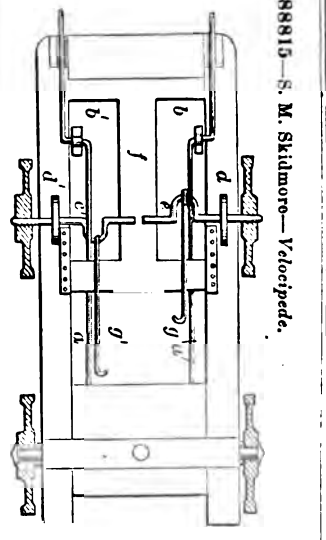

88812—A. Runstetler—*Corn Planter.*

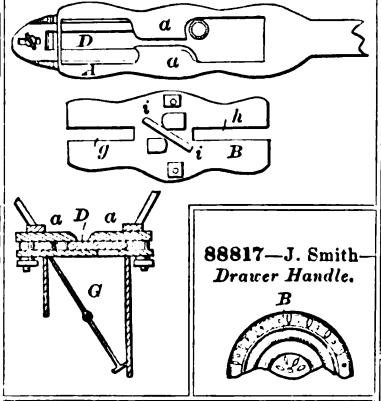

88813—E. W. Scott—*Stool.*

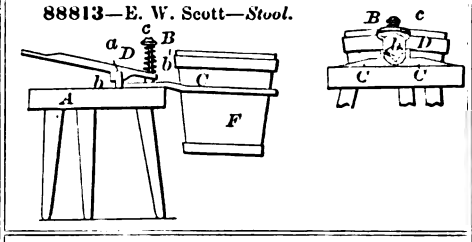

88814—W. F. Seavey—*Blind Catch.*

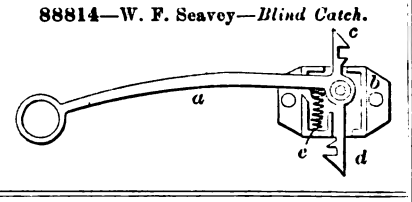

88817—J. Smith—*Drawer Handle.*

88820—F. Stith—*Tongs.*

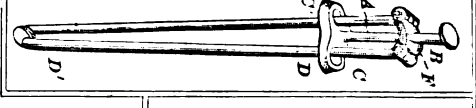

88816—H. E. Smith—*Washing Machine.*

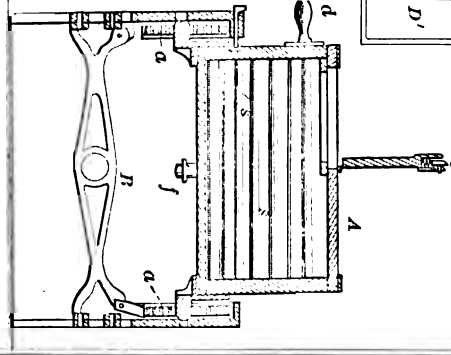

88818—W. W. Sowles—*Gate.*

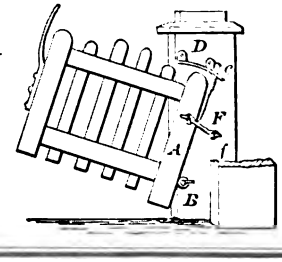

88819—T. Stanford—*Fence.*

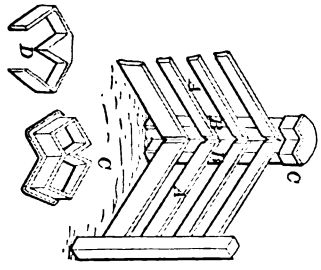

88821—M. Sweet—*Boring Machine.*

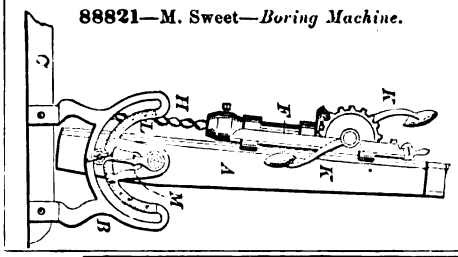

88822—B. F. Taft—*Hay Spreader.*

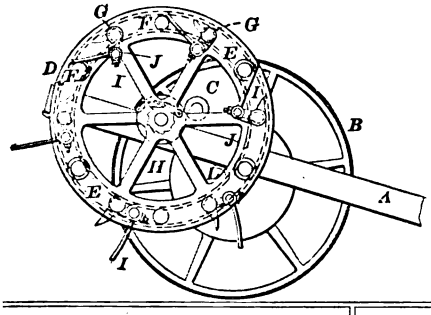

88823—W. Thompson—*For Mixing Tea.*

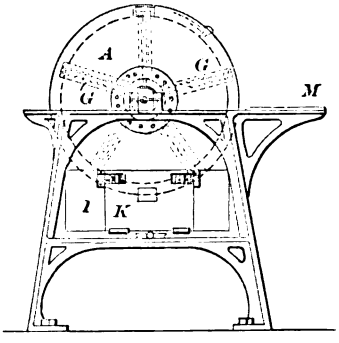

88824—W. H. Towers—*Boots and Shoes.*

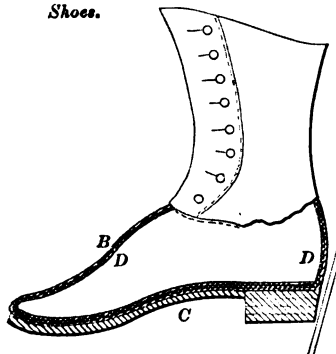

88827—Wheeler & Jerome—*Paper Boxes from Pulp.*

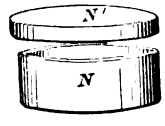

88825—W. B. Watkins—*Tooth Brush.*

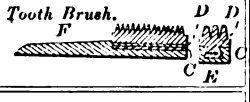

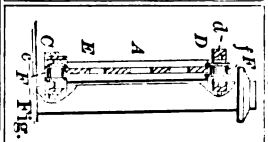

Fig. 2

88831—E. R. Austin—*Step Ladder.*

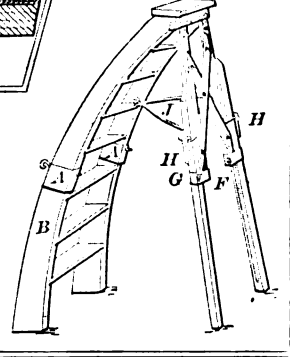

88828—A. D. Wilcox—*Gate.*

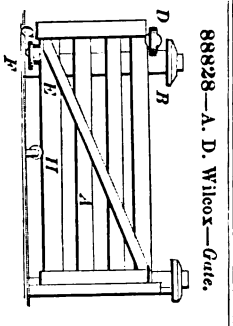

88829—H. Wright—*Jug Top.*

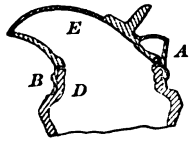

88830—Andrews & Ogden—*Cheese.*

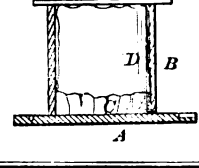

88832—S. W. Barber—*Brake.*

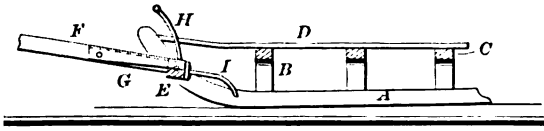

88833—T. E. Barrow—*Gauge.*

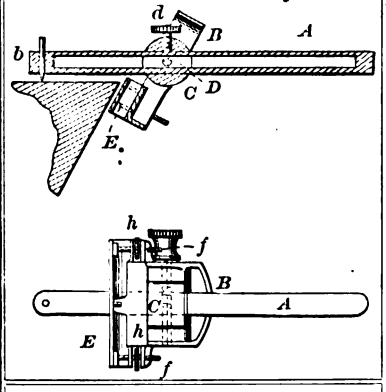

88836—J. S. Birch—*Watch Key.*

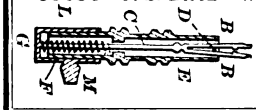

88837—P. Blake—*Die.*

88838—G. W. Blaksley—*Breast Collar.*

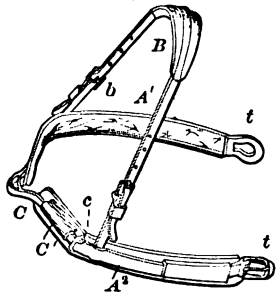

88841—W. Brocklesby, Jr.—*Hand Truck.*

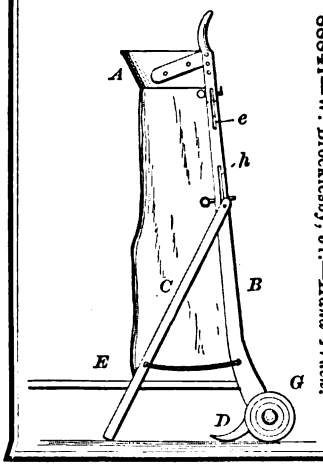

88835—H. Betts—*Printing Press.*

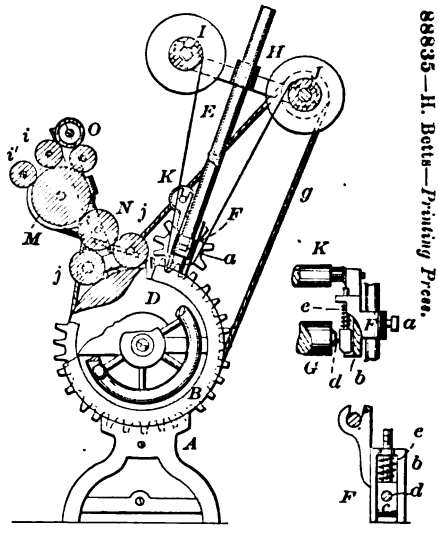

88834—J. D. Beck—*Vise.*

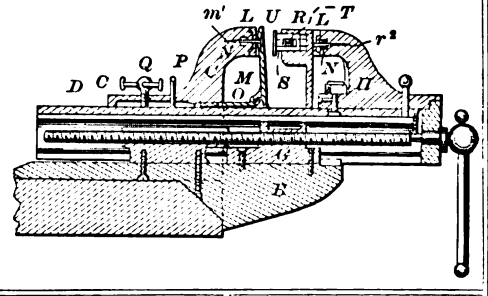

88839—C. A. Bogert—*Knife Sharpener.*

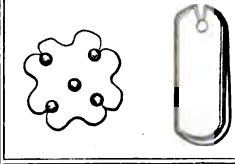

88840—J. Booth—*Ring for Spinning Machines.*

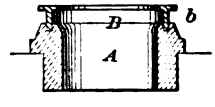

88842—M. T. Burbank—*Ladder.*

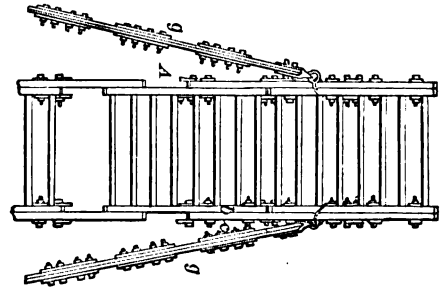

88843—J. & W. H. Butterworth—*Grain Fan Blast.*

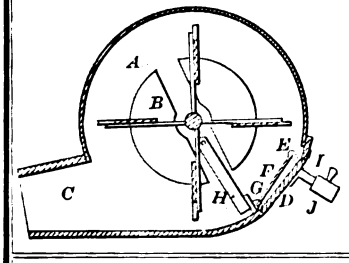

88844—D. Miles—*Fire Extinguisher.*

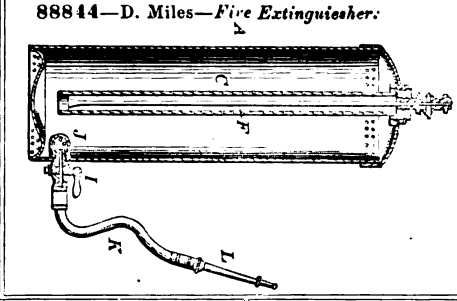

88846—N. Chapman—*Baling Press.*

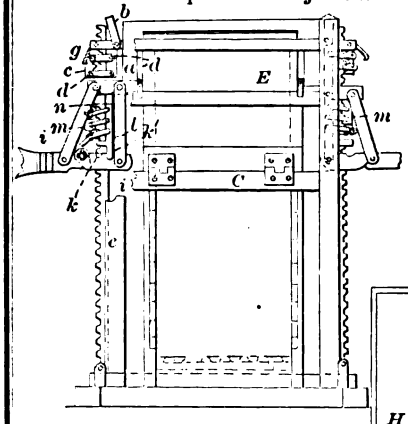

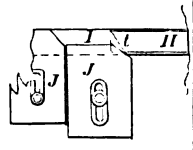

88845—A. H. Carroll—*Loom Picker.*

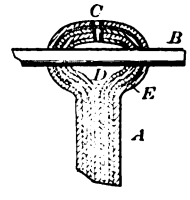

88849—D. C. Chester—*Grain Conveyer.*

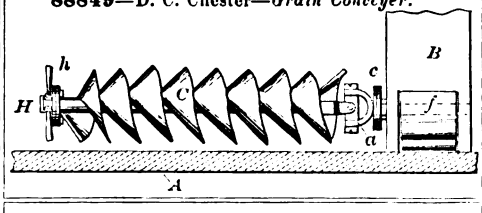

88847—N. Chapman—*Churn.*

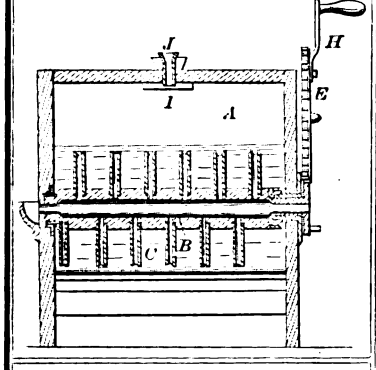

88850—R. M. Cole—*Cigar Machine*

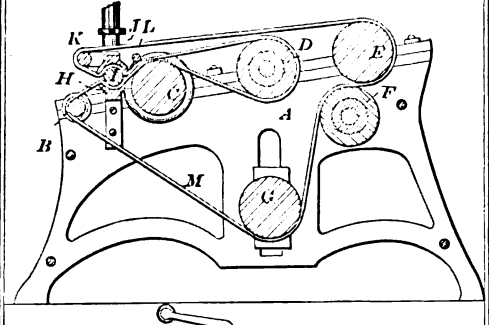

88848—J. Charlton—*Wrench.*

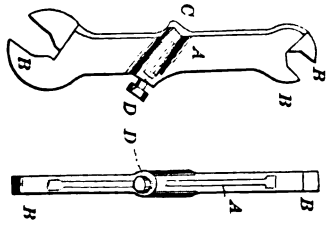

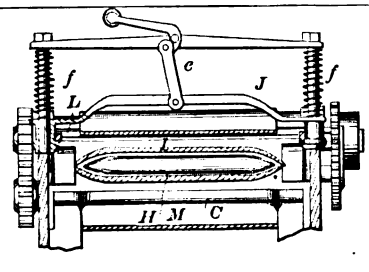

88867—W. P. Hall—*Stove and Furnace.*

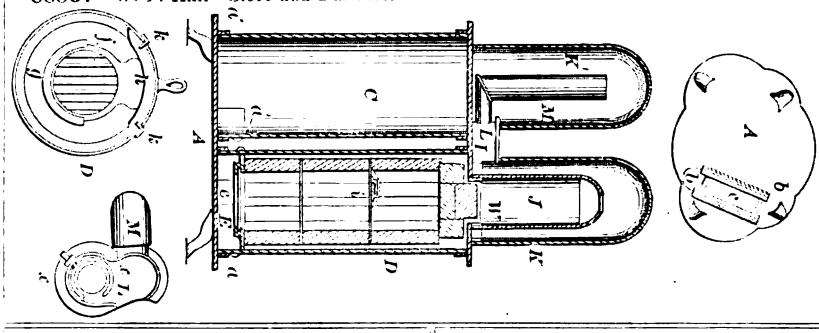

88868—J R. Hand—*Cultivator.*

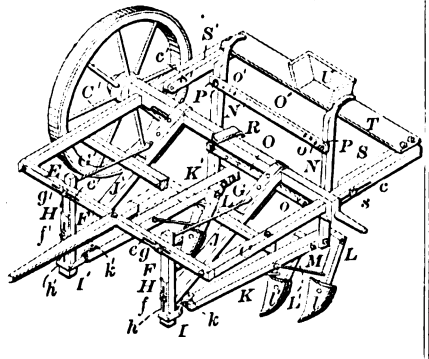

88869—A. Henkel—*Carving Machine.*

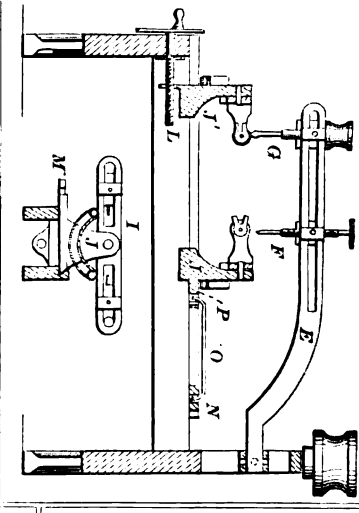

88870—I. F. Herrin—*Seed Planter.*

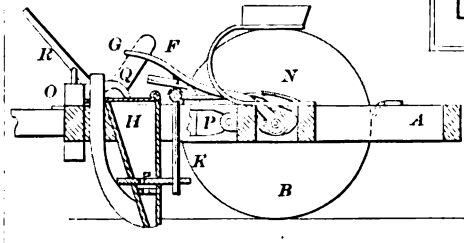

88871—W. C. Hicks—*Steam Engine.*

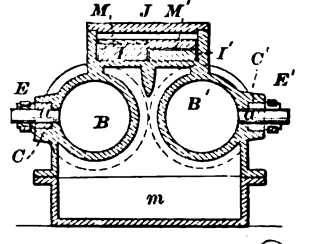

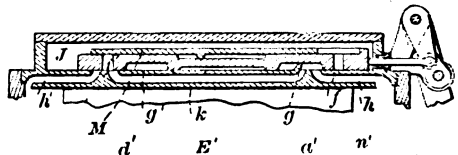

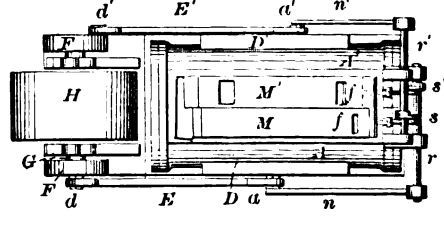

88874—L. Holmes—
Carding Engine.

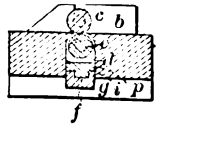

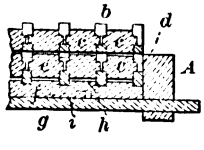

88872—W. S. Hill—*Velocipede.*

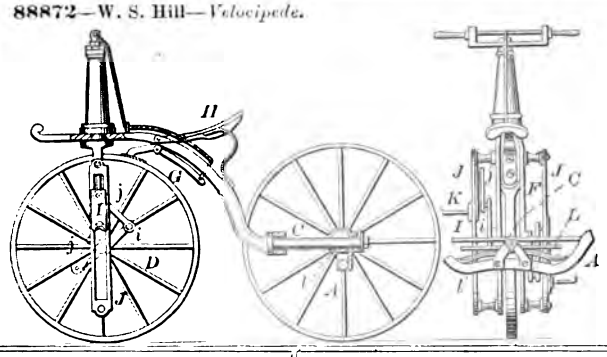

88876—C. C. Hull—*For Transmitting Motion.*

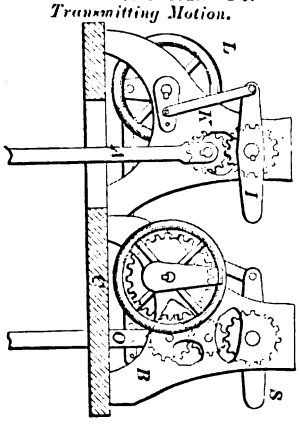

88881—J. Larkin—*Nursing Table.*

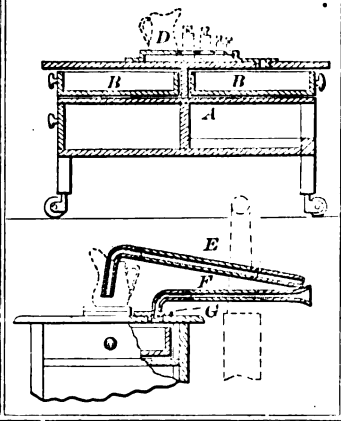

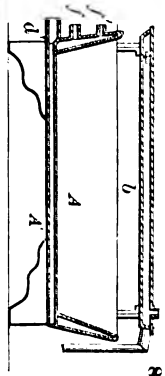

88878—B. F. Jewett—*Milk Pan.*

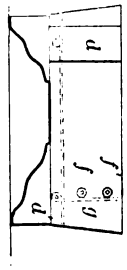

88875—S. Hughes—*Bran Duster.*

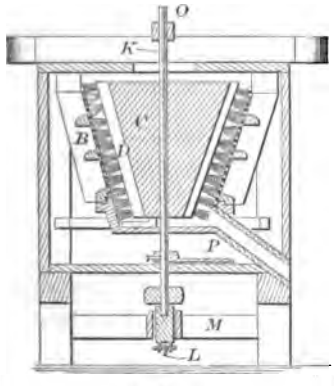

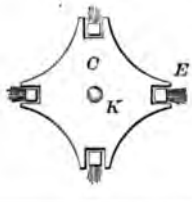

88880—J. W. M. Kirkpatrick—*Threshing and Separating Machine.*

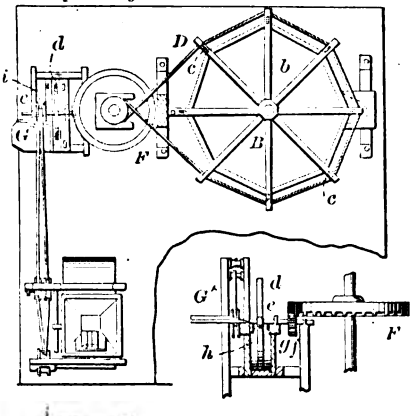

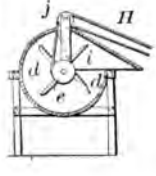

88884—J. A. Marine—*Hoe.*

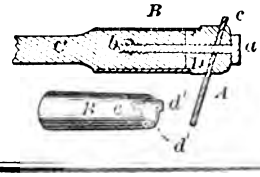

88882—W. J. Lewis—*Screw Threading Machine.*

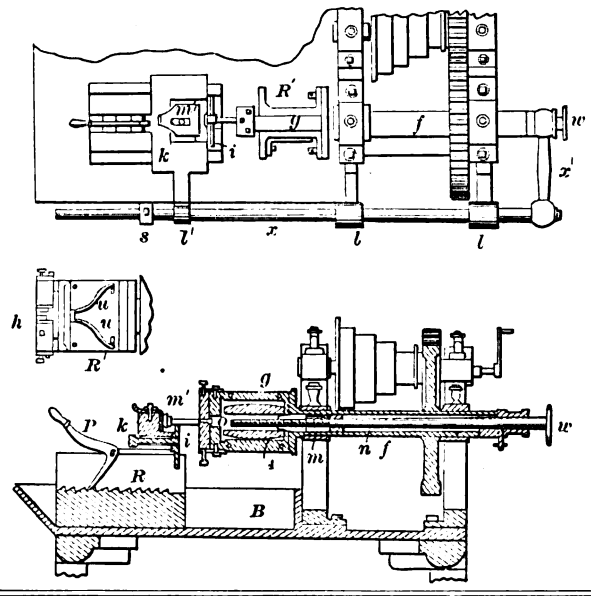

88883—W. R. Marie—*Pastry Cutter and Crimper.*

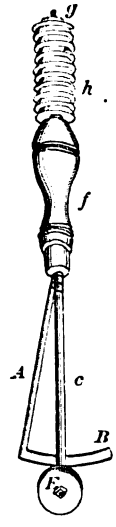

88885—J. L. Mason—*For Sheet Metal Screw Caps.*

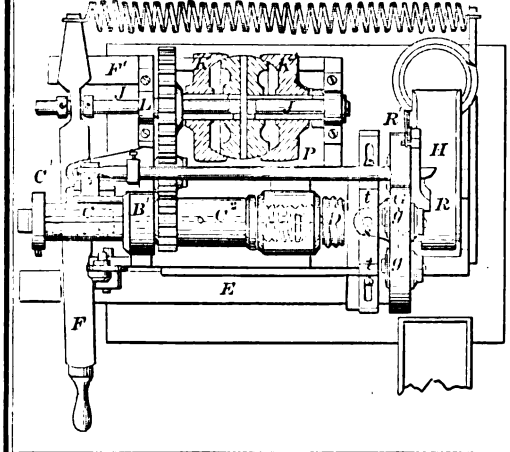

88886—J. L. Mason—*For Sheet Metal Screw Caps.*

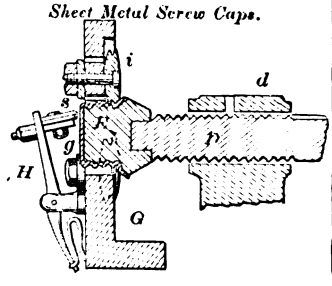

88890—J. McGoveren—*Fire Arm.*

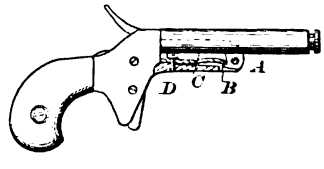

88889—F. W. McCleave—*Velocipede.*

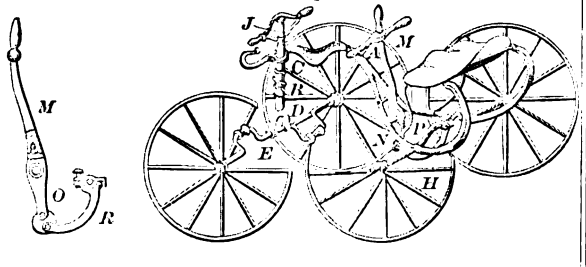

88887—T. J. Mayal—*Rubber Hose.*

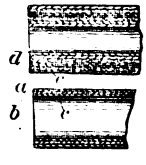

88888—T. J. Mayal—*For Rubber Hose.*

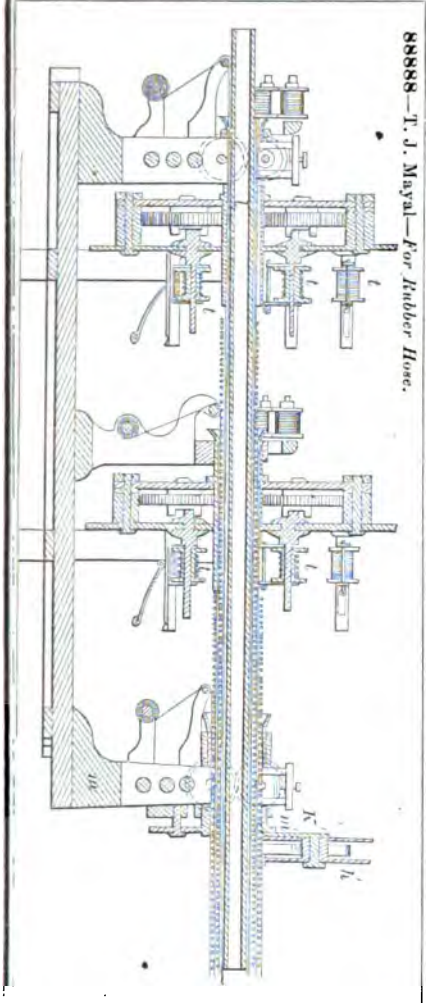

88891—A. A. McMahen—*Well Auger.*

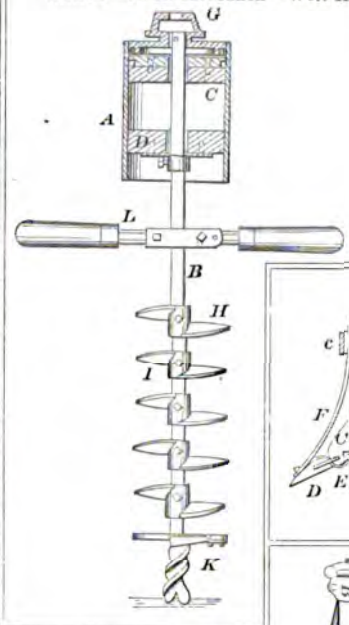

88892—E. Mears—*Weather Strip.*

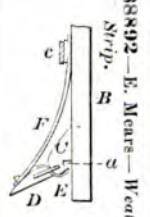

88894—T. H. Mott—*Velocipede.*

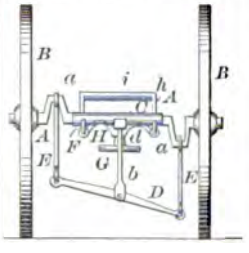

88896—H. W. Palmer—*Doubletree.*

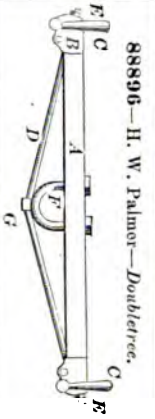

88893—C. G. Miller—*Saw Filing Machine.*

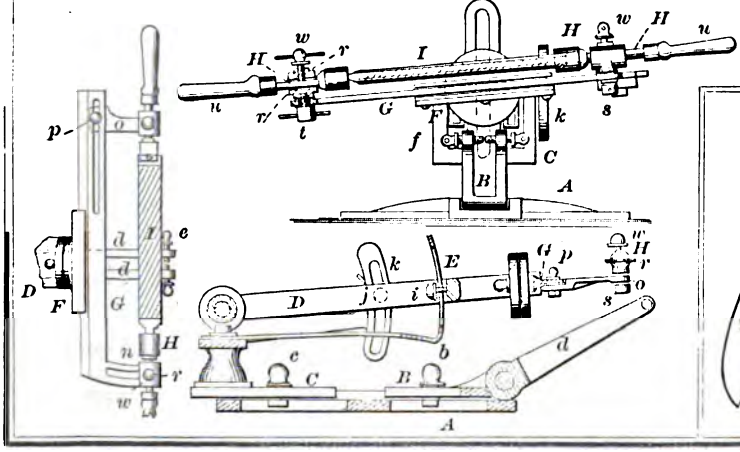

88895—A. Murdock—*Scissors.*

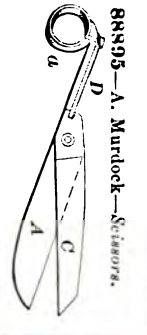

88897—C. H. Parmenter—*Shuttle Holder.*

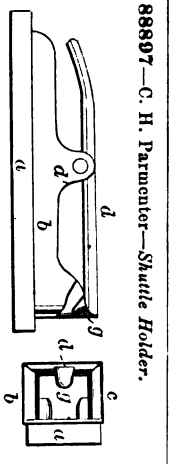

88899—J. G. Perry—*Mowing Machine and Hay Spreader.*

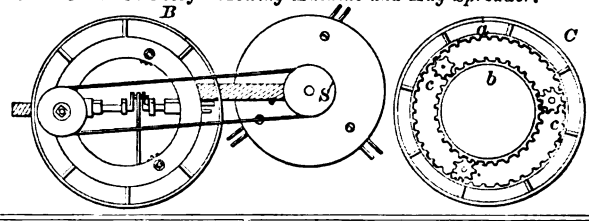

88900—E. S. Pierce—*For Conveying Screw Blanks.*

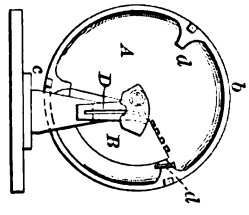

88901—E. S. Pierce—*For Conveying Screw Blanks.*

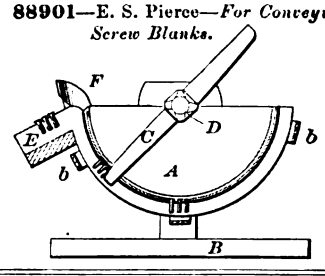

88898—F. P. Perdue—*Switch.*

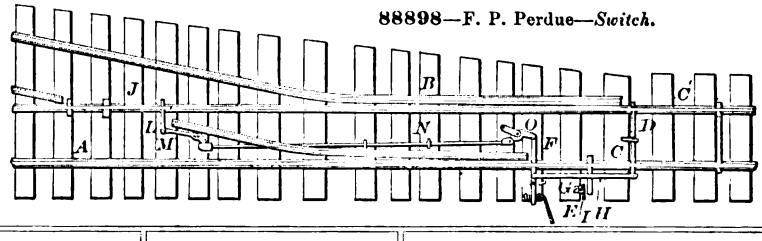

88902—E. S. Pierce—*For Connecting Parts of Machinery.*

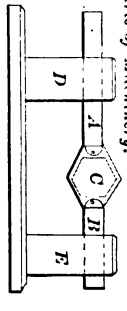

88903—W. Polyblank—*Oil Can.*

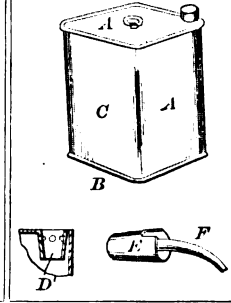

88904—H. J. & W. Pringle—*Carriage Coupling.*

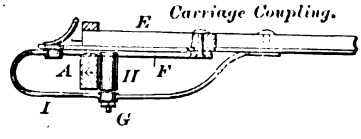

88905—H. O. Reddish—*Washing Machine.*

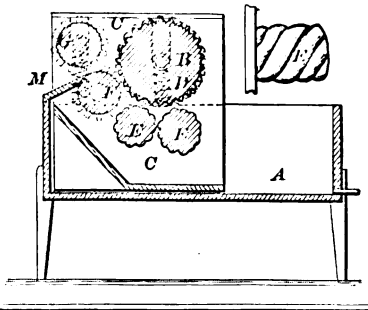

88906—R. Reynolds—*Loom.*

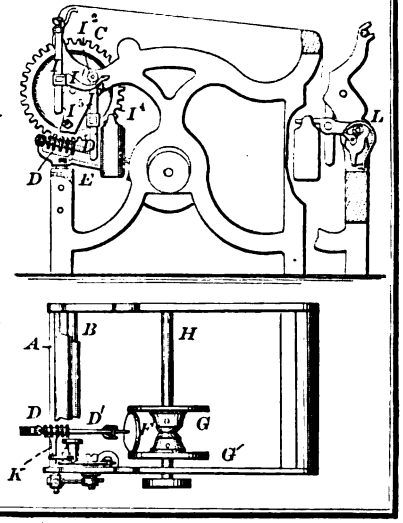

88888—T. J. Mayal—*For Rubber Hose.*

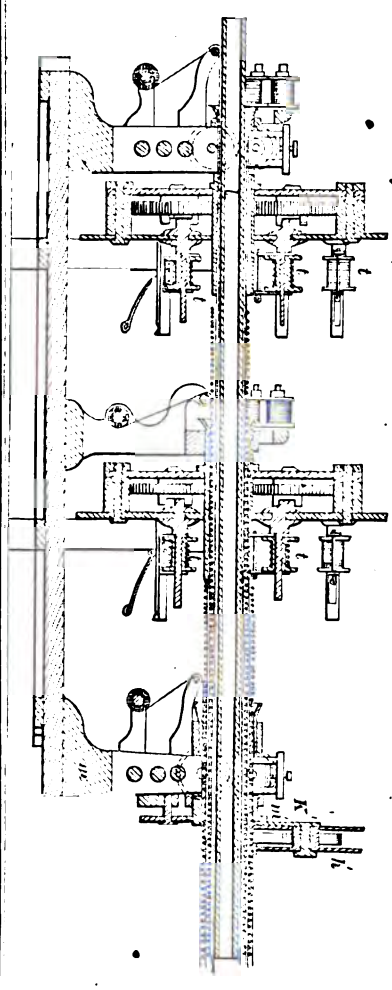

88891—A. A. McMahon—*Well Auger.*

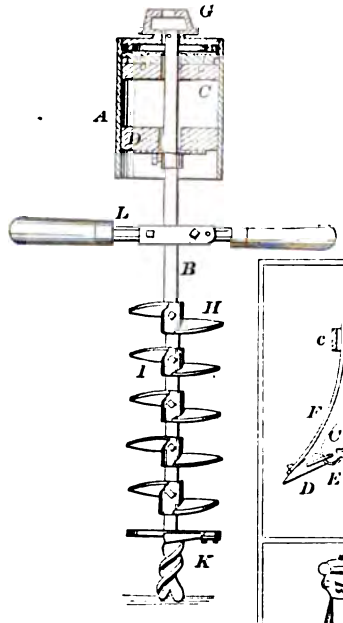

88892—E. Meare—*Weather Strip.*

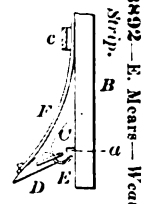

88894—T. H. Mott—*Velocipede.*

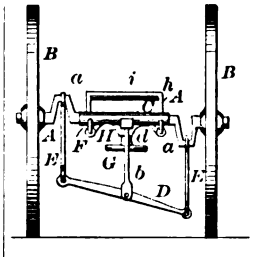

88896—H. W. Palmer—*Doubletree.*

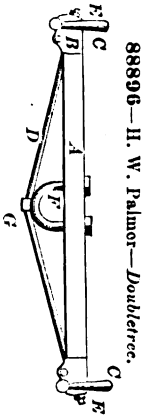

88893—C. G. Miller—*Saw Filing Machine.*

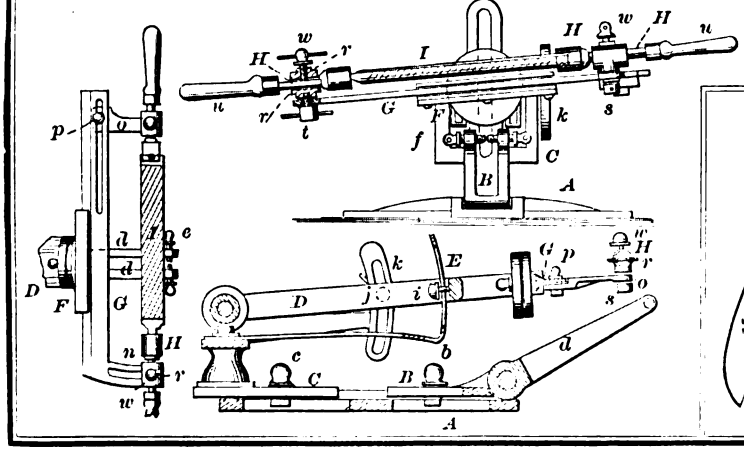

88895—A. Murdock—*Scissors.*

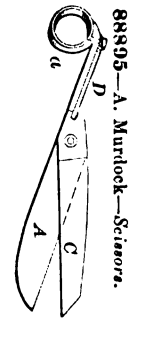

88915—J. B. Sexton—*Cultivator.*

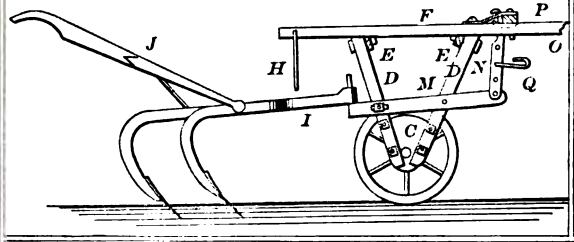

88917—E. & E. G. Sirret—*Mop Head.*

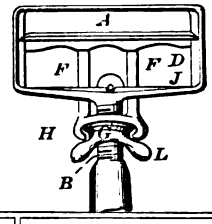

88916—I. Shaw—*Potato Digger.*

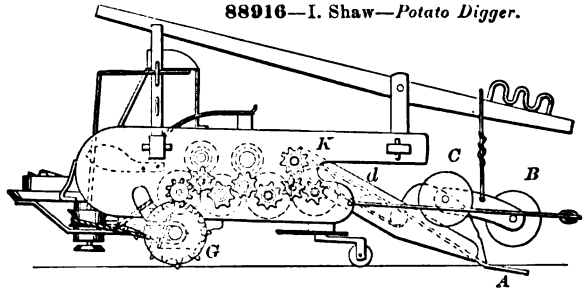

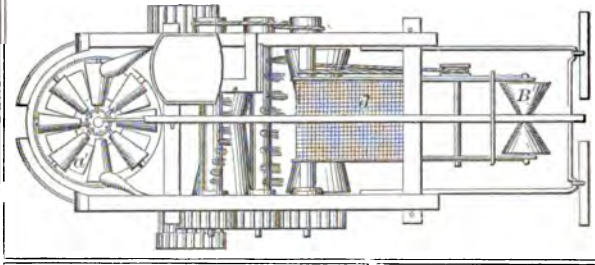

88918—T. J. Sloan—*For Securing Knobs to Shanks.*

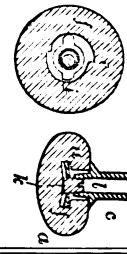

88919—T. J. Sloan—*For Securing Knobs to Shanks.*

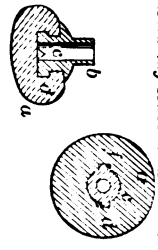

88921—S. Snow—*Milking Seat.*

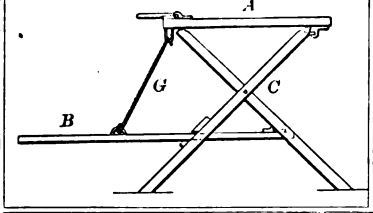

88920—T. Smiley—*For Shaving the Edges of Boot and Shoe Soles.*

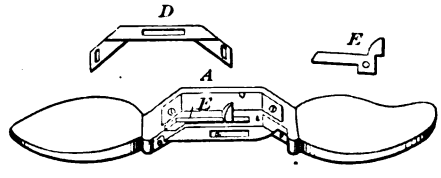

88924—R. W Stough—*Cotton Gin.*

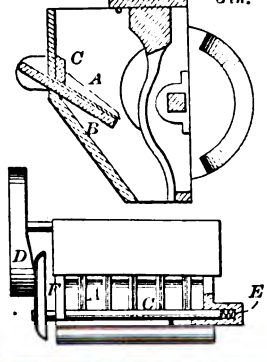

88922—W. C. Spellman—*Broom Head.*

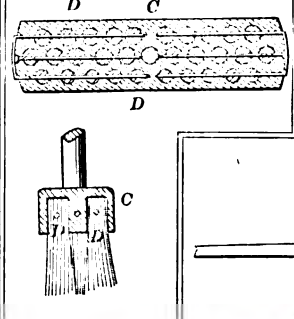

88923—T. Stebins—*Lifting Jack.*

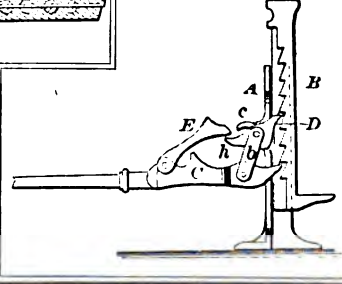

88925—A. L. Swan—*Melodeon.*

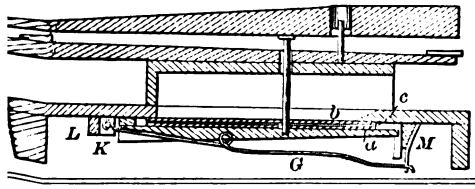

88928—J. Weimar—*Safe.*

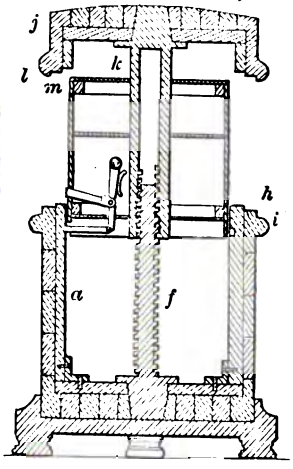

88929—G. Westinghouse, Jr.—*Steam Power Brake.*

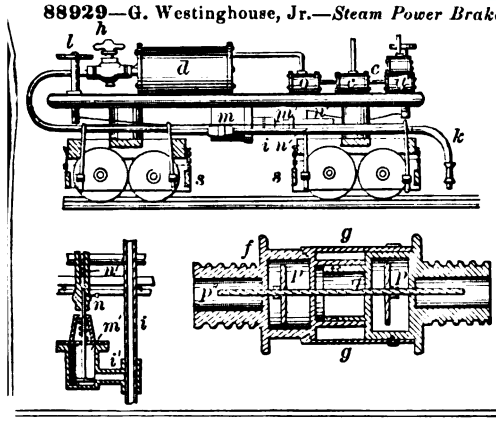

88927—J. L. Treat—*For Raising Beer.*

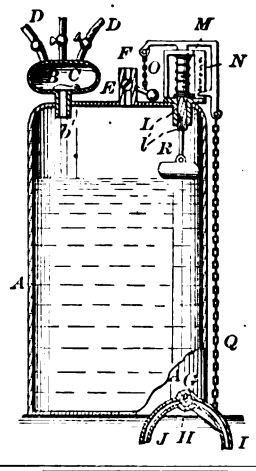

88930—J. J. White—*Velocipede.*

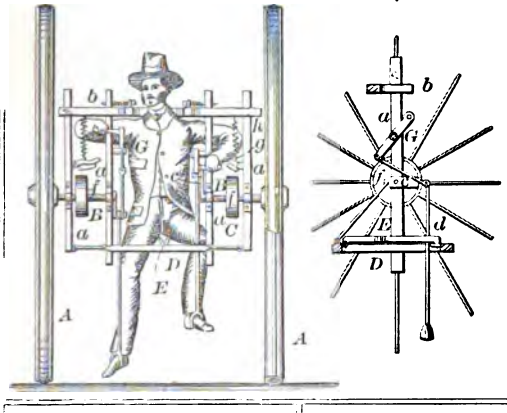

88931—B. B. Williams—*Harrow.*

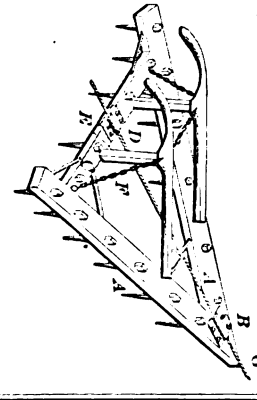

88932—B. F. Wilson—*Sash Holder.*

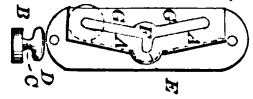

88933—B. F. Wilson—*Stop Valve.*

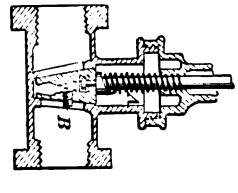

88934—B. F. Wilson—*Stop Valve.*

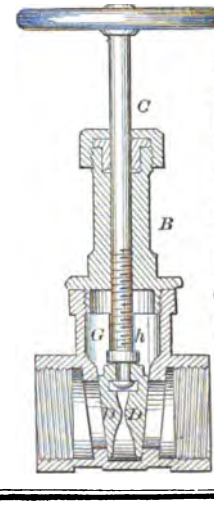

88915—J. B. Sexton—*Cultivator.*

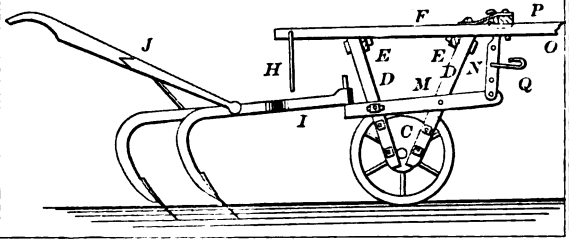

88917—E. & E. G. Sirret—*Mop Head.*

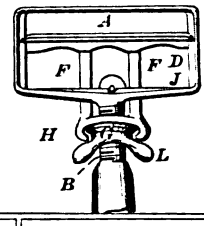

88916—I. Shaw—*Potato Digger.*

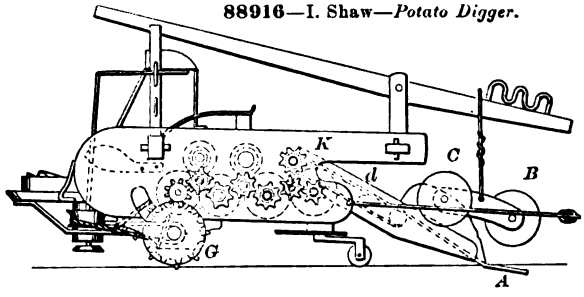

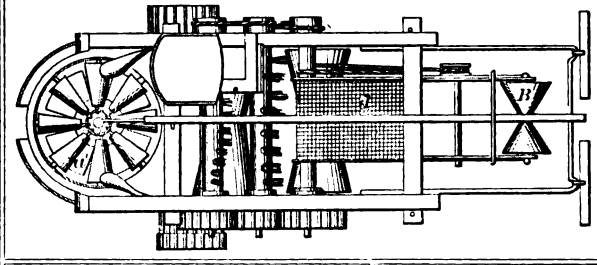

88918—T. J. Sloan—*For Securing Knobs to Shanks.*

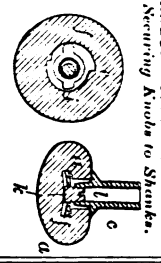

88919—T. J. Sloan—*For Securing Knobs to Shanks.*

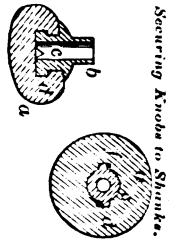

88921—S. Snow—*Milking Seat.*

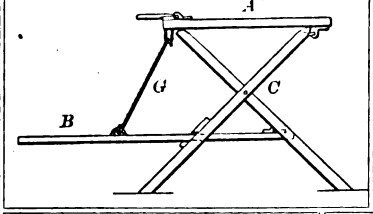

88920—T. Smiley—*For Shaving the Edges of Boot and Shoe Soles.*

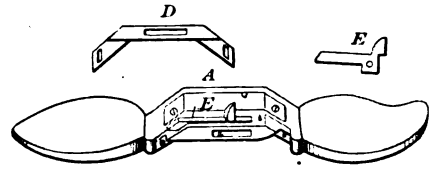

88924—R. W Stough—*Cotton Gin.*

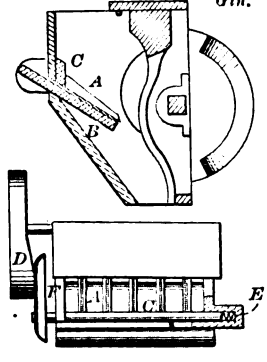

88922—W. C. Spellman—*Broom Head.*

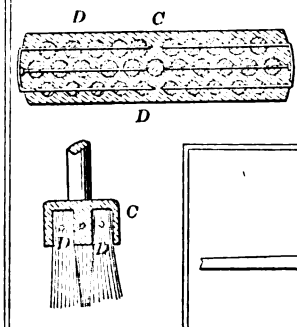

88923—T. Stebins—*Lifting Jack.*

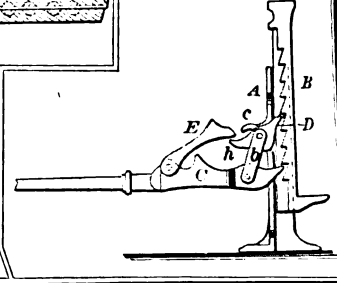

88943—Chase & Morton—*Shingle Machine.*

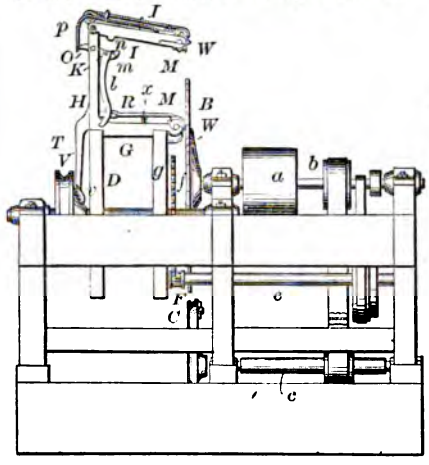

88947—H. V. Edmond—*For Exhibiting Hymns.*

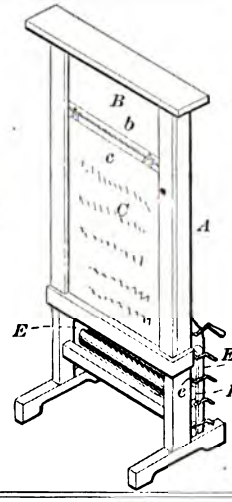

88945—E. Cooper—*Hay Loader.*

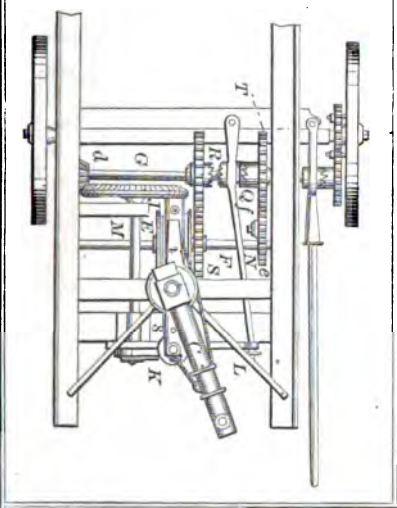

88945—E. Cooper—*Hay Loader.*

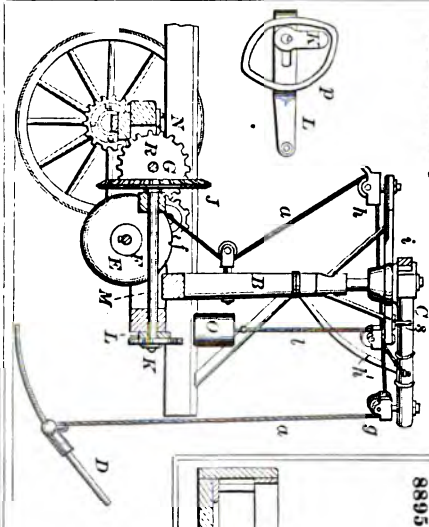

88946—D. B. Cox—*Stove.*

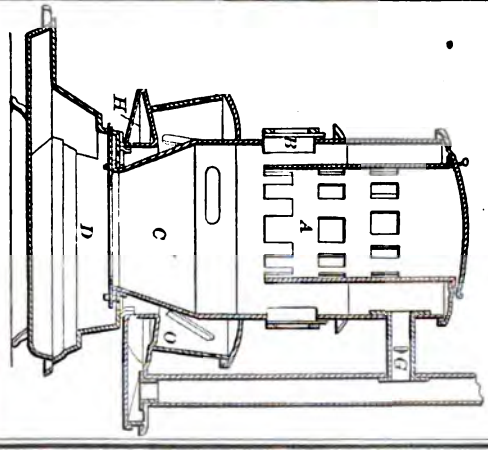

88950—Taber & Martin—*Wagon Seat Fastening.*

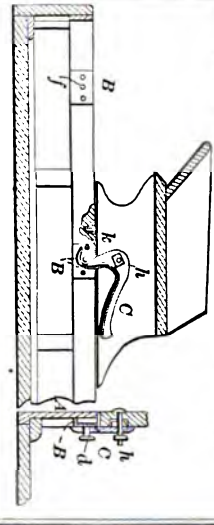

88949—J. E. Emerson—*Saw.*

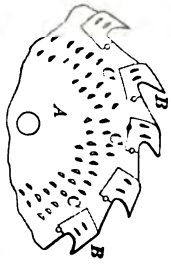

88951—A. Foot—*Harvester.*

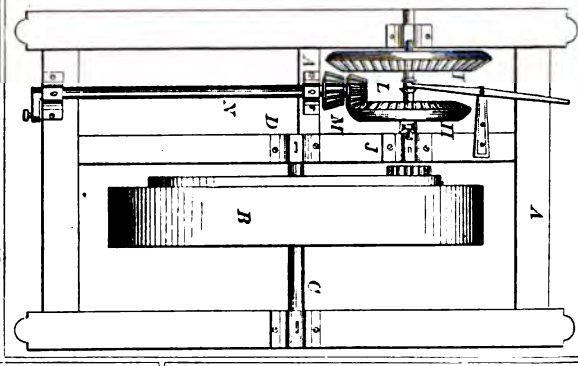

88952—K. Frazer—*Buckle.*

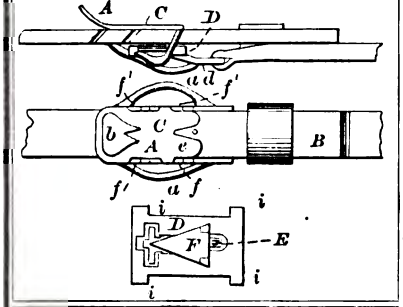

88953—W. J. Fryer—*Building.*

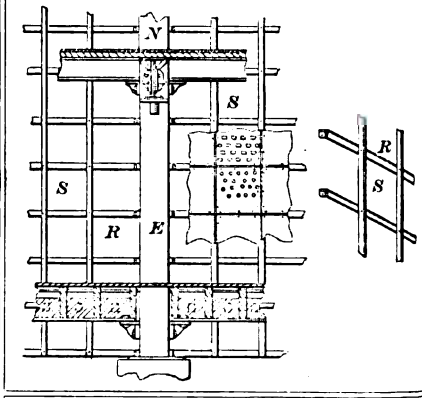

88954—G. Fuchs—*Wagon Top.*

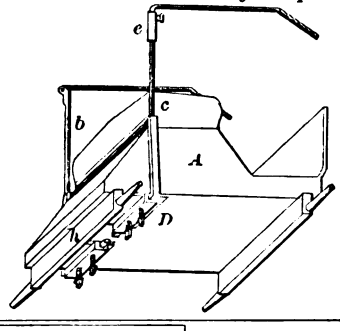

88955—T. H. Gary—*Dumping Wagon.*

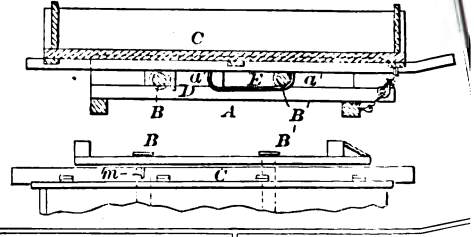

88958—F. Henderson—*Lasting Tool.*

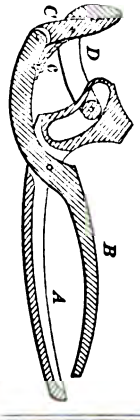

88956—T. Greenhalgh—*Braiding Machine.*

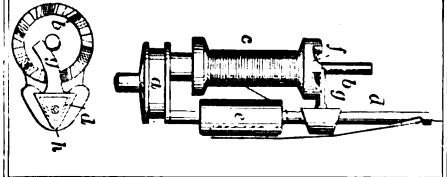

88957—W. J. Hale—*Churn Dasher.*

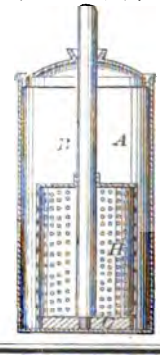

88959—C. H. Hopkins—*Bolt.*

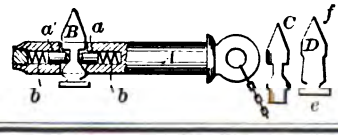

88960—J. Houpt—*Surface Condenser.*

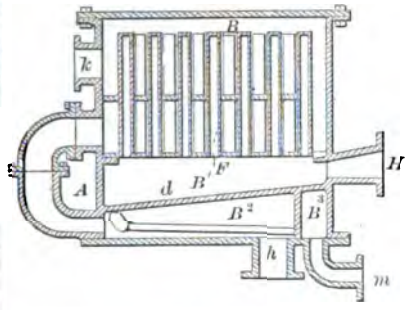

88961—W. G. Hull—*Saddle.*

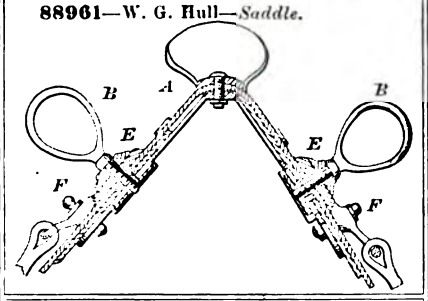

88962—A. C. Jaques—*Wagon Brake and Tongue Support*

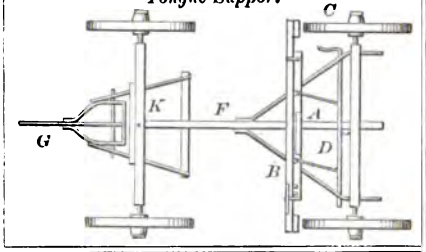

88963—S. Johnson—*Amalgamator.*

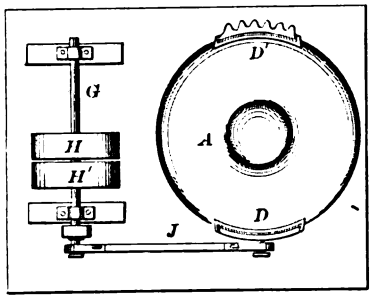

88964—J. C. Kent—*Blast Heating Apparatus.*

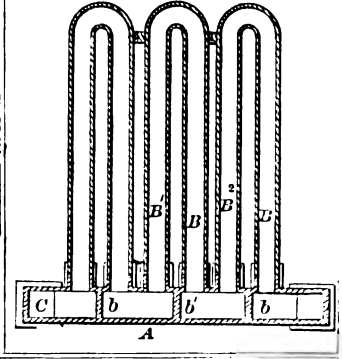

88966—M. Krickl—*Stair Rod.*

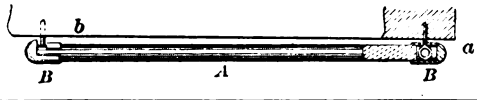

88965—Knowlton & Smith—*Ox Yoke.*

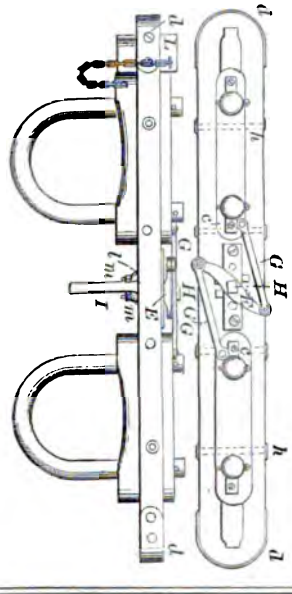

88967—L. Louis—*Melodeon Attachment to Piano Fortes.*

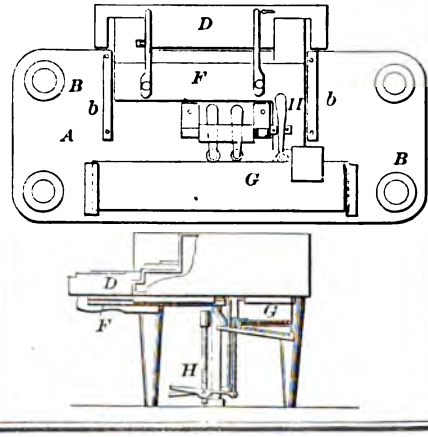

88968—L Mangeon—*Lamp.*

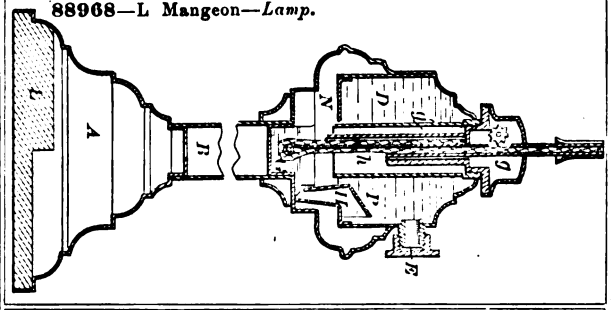

88969—W. J. & A. T. Manker—*Sash Stop.*

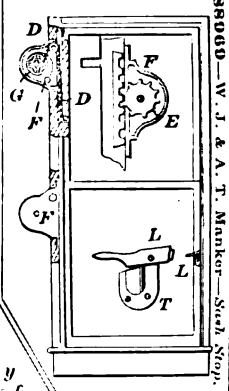

88971—E. G. Matthews—*Seed Sower and Planter.*

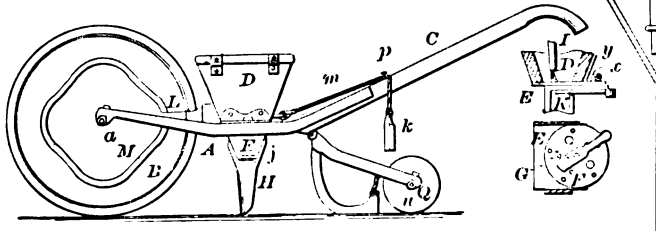

88970—T. Marschall—*Piano Forte.*

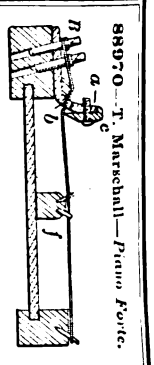

88972—E. May—*Lath Machine.*

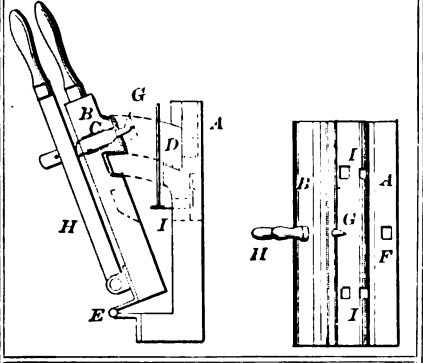

88975—G. V. Metzel—*Stencil Impress.*

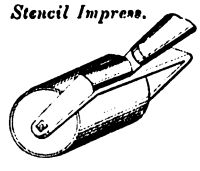

88974—J. McLeod—*Latch and Lock.*

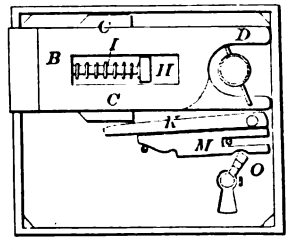

88979—E. C. Penfield—*Truss Pad.*

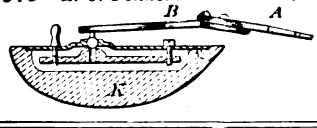

88977—J. Muller—*Bedstead.*

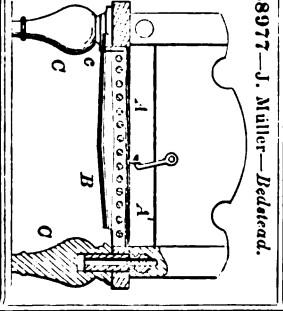

88976—Moore & Day—*Inking Apparatus for Color Printing.*

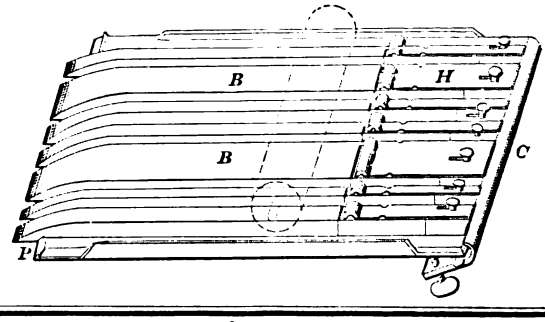

88980—T. T. Prosser—*Power Hammer.*

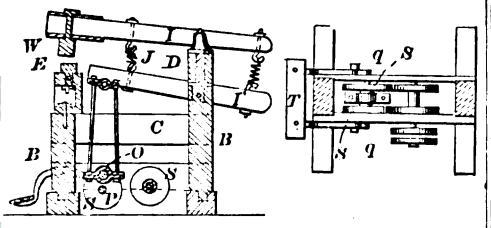

88981—T. T. Prosser—*For Heading Bolts.*

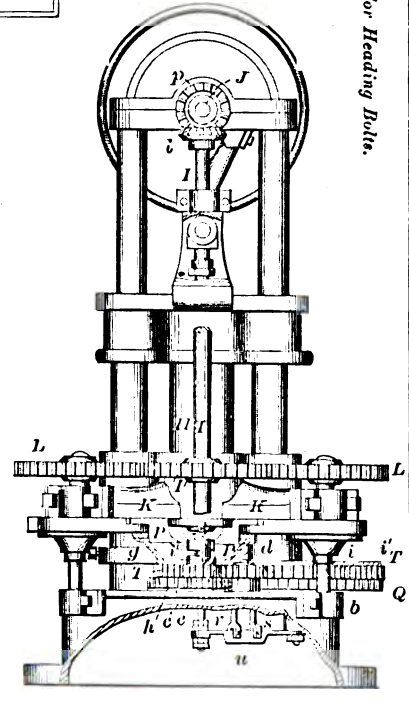

88983—E. Reynolds—*Churn Lid Screen.*

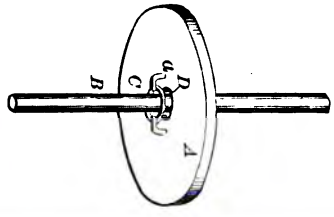

88984—J. A. Robbins—*Supporter.*

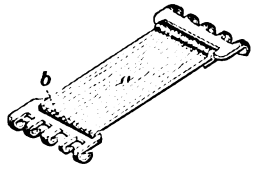

88985—W. Ross—*Door Spring.*

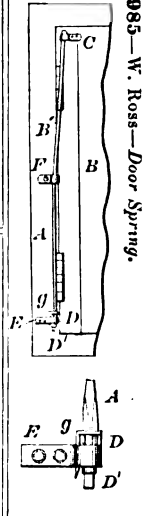

88986—E. Smith—*Stove.*

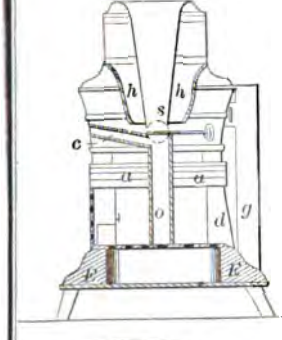

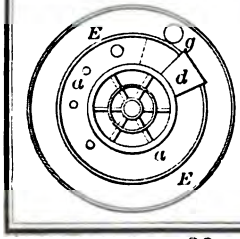

88987—E. Smith—*Stove.*

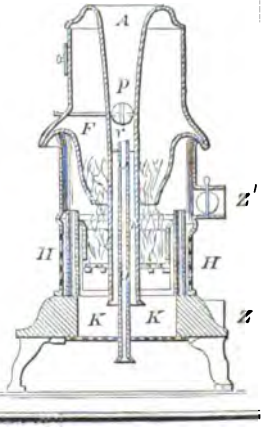

88988—J. W. Smith—*Table.*

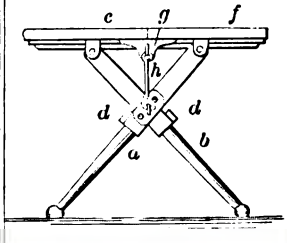

88968—L Mangeon—*Lamp.*

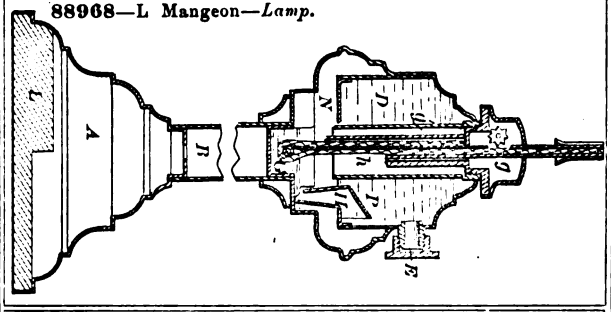

88969—W. J. & A. T. Manker—*Stock Stop.*

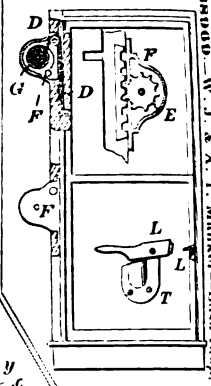

88970—T. Marschall—*Piano Forte.*

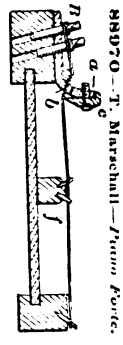

88971—E. G. Matthews—*Seed Sower and Planter.*

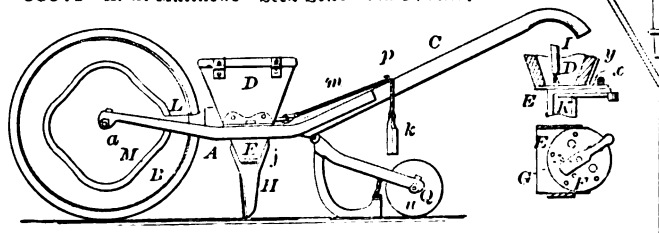

88972—E. May—*Lath Machine.*

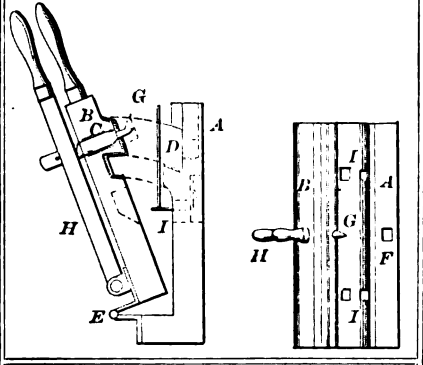

88975—G. V. Metzel—*Stencil Impress.*

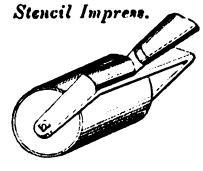

88974—J. McLeod—*Latch and Lock.*

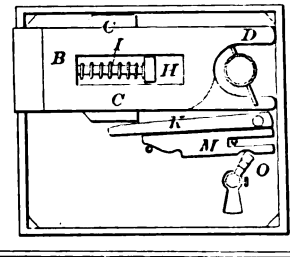

88979—E. C. Penfield—*Truss Pad.*

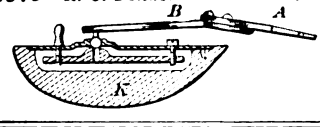

88977—J. Müller—*Bedstead.*

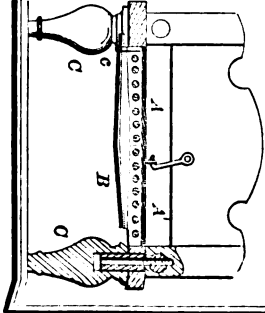

88976—Moore & Day—*Inking Apparatus for Color Printing.*

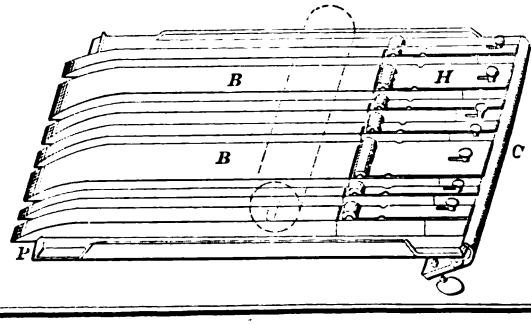

88995—H. Uhry—*Stair Rod.*

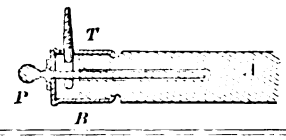

88996—T Welham—*Ring and Traveler for Spinning.*

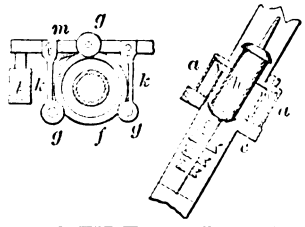

89001—J. C Curryer—*Corn Sheller.*

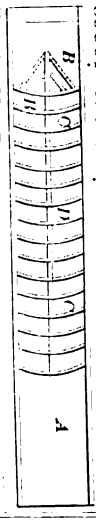

88997—T. Welham—*For Mixing Soapstone with Cotton.*

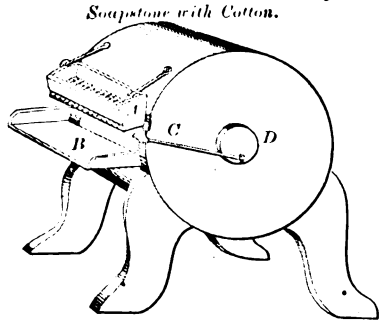

88999—J. P. Whipple—*Pitcher.*

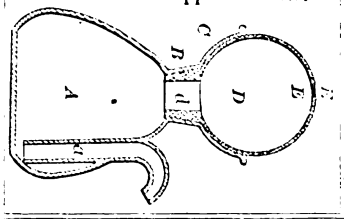

89000—J. Young—*Washing Machine*

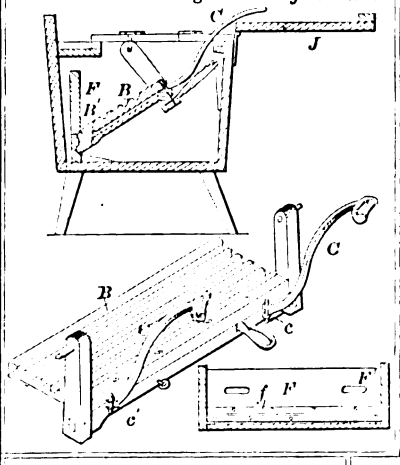

88998—G. Wharton—*Plow.*

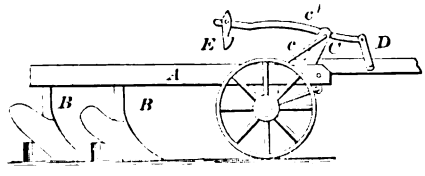

89003—J. P. Allen—*Car Wheel.*

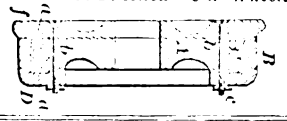

89005—J. S. & T. B. Atterbury—*For Glass Ware.*

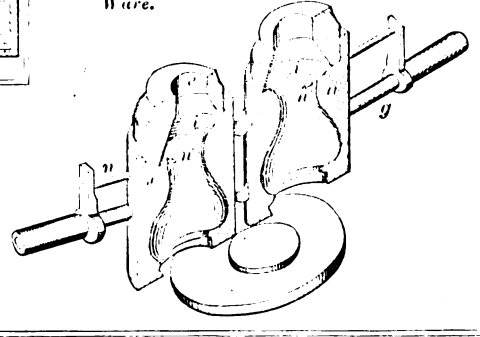

89004—J. Arbeiter—*Mower.*

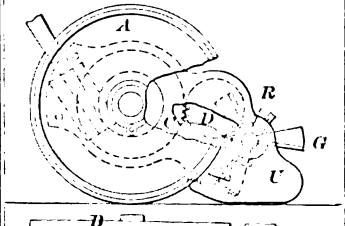

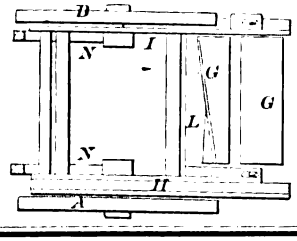

89002—J. F. Adams—*Gold Leaf Condenser.*

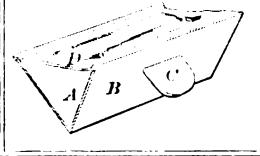

89006—A. Bartlett—*Saw Sharpener.*

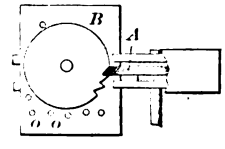

89007—I. N. Beals—*For Lasting Boots and Shoes.*

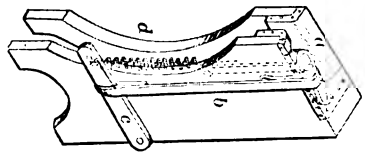

89008—J. H. Bean—*Corn Marker.*

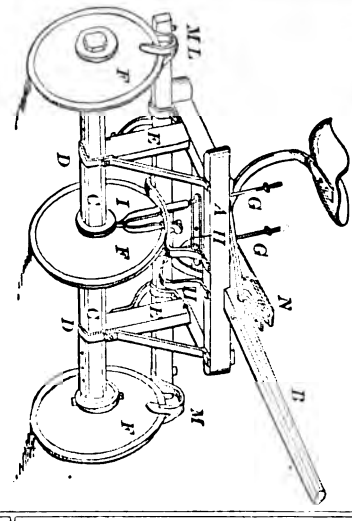

89009—H. R. Bean—*Last.*

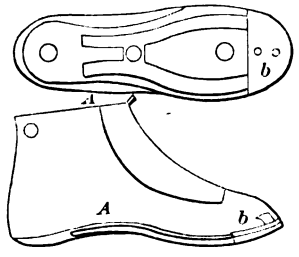

89011—E. B. Bigelow—*Loom.*

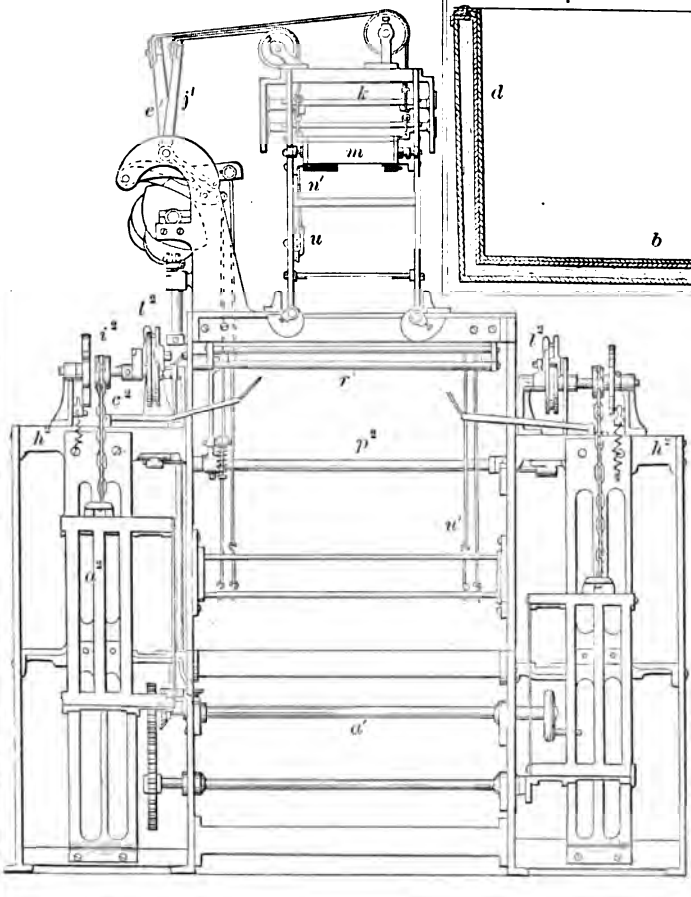

89010—E. Bigelow—*Ice Chest.*

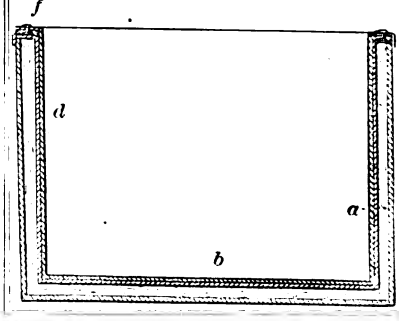

89012—E. B. Bigelow—*Loom.*

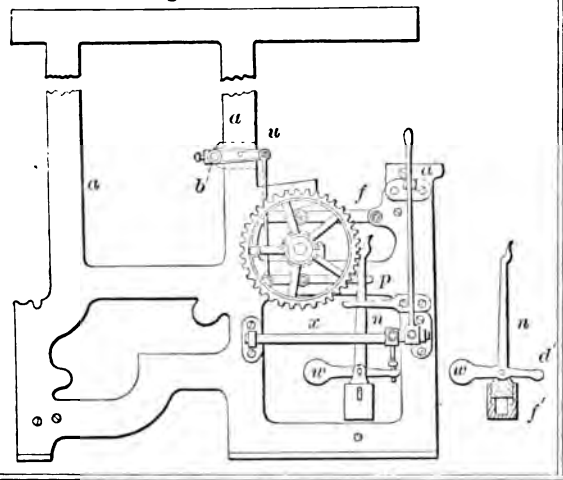

89013—R. Blake—*Box Opener.*

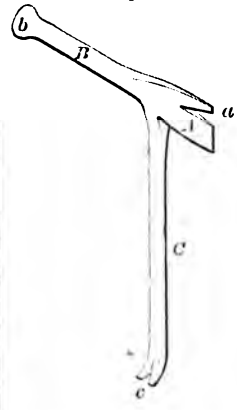

89014—J. T. Blois—*Car Brake.*

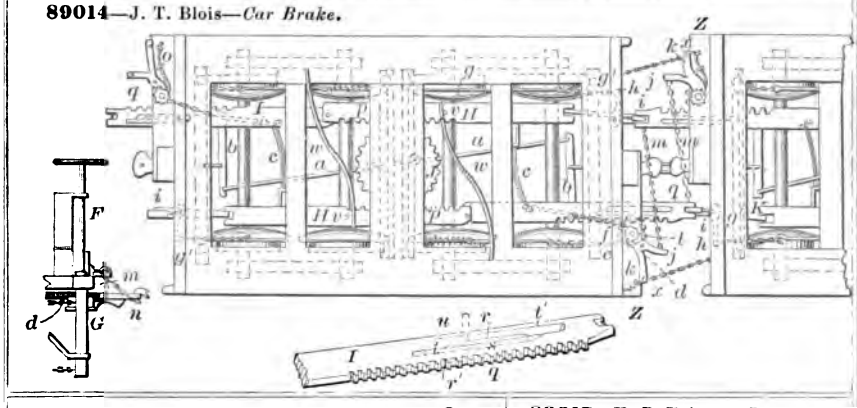

89015—A. T. Boon—*Steering Apparatus.*

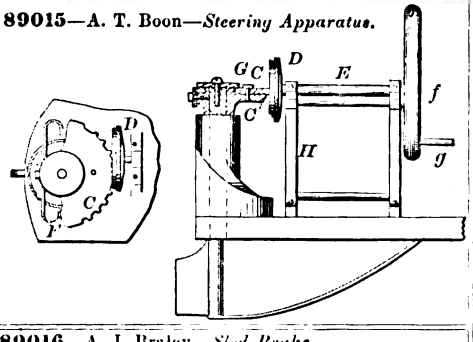

89016—A. J. Braley—*Sled Brake.*

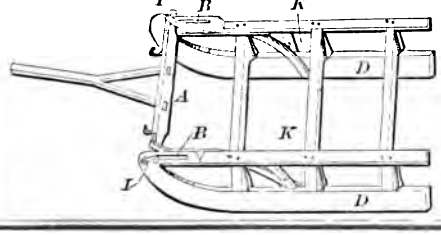

89017—H. B. Briggs—*Spinning Frame.*

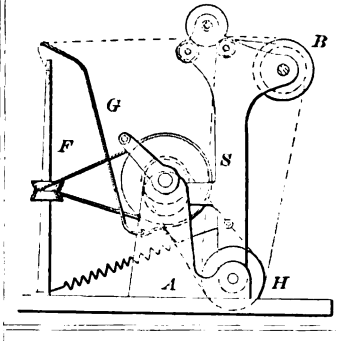

89018—J. W. Brooks—*Corset Fastening.*

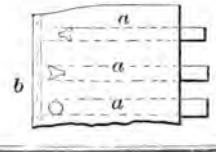

89019—A. P. Brown—*File Holder.*

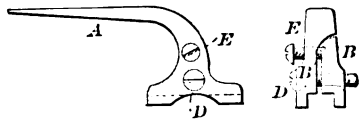

89020—J. H. Brown—*Pump Valve.*

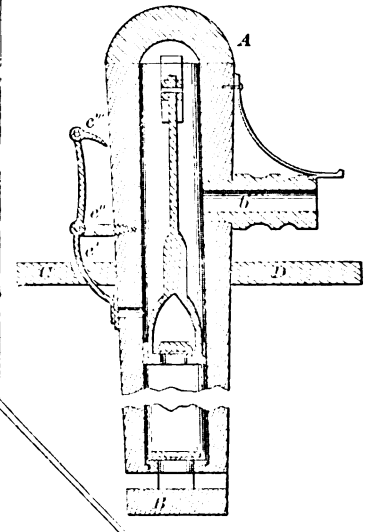

89021—G. Buchanan—*For Steering Sleds.*

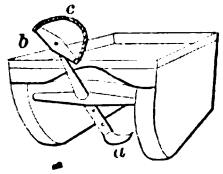

89022—E. Buel—*Baling Press.*

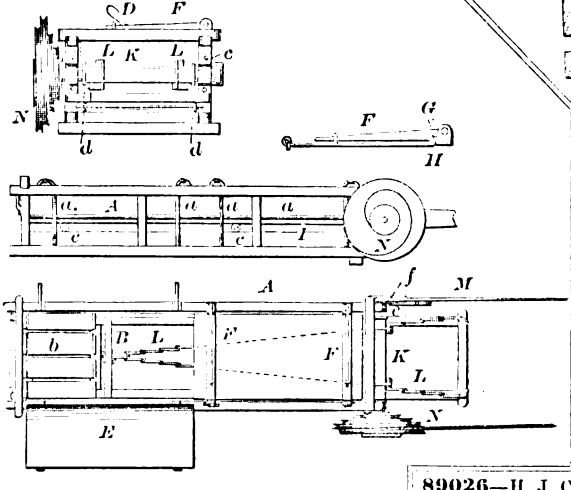

89023—Bulkley & Shepard—*Pump Valve.*

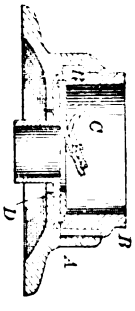

89024—L. S. Carpenter—*Gong Bell.*

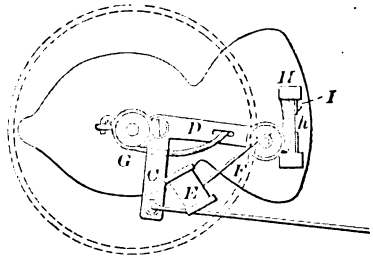

89025—W. T. Carroll—*Ring for Spinning Frame.*

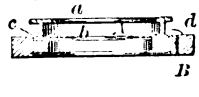

89026—H. J. Case—*Mechanical Movement.*

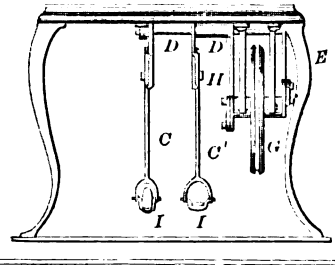

89029—E. Crandal—*Horse Rake.*

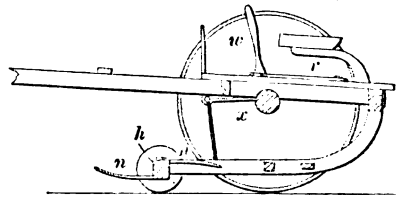

89027—L. R. Comstock—*Car Stove.*

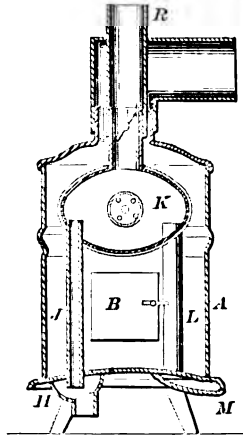

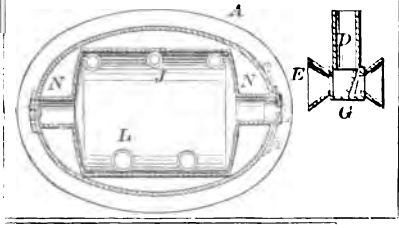

89028—C. F. Corbett—*Fluting Machine.*

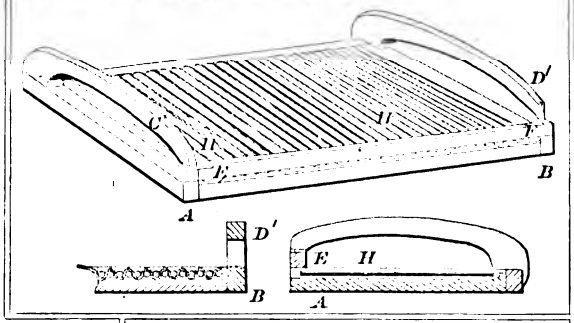

89031—J. Danner—*Shelf, Coat Rack and Clothes Frame.*

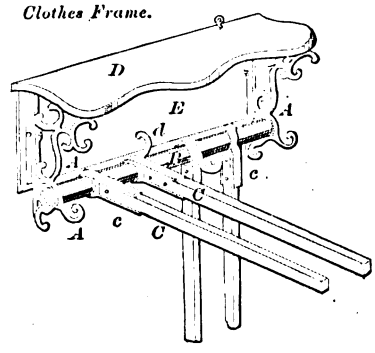

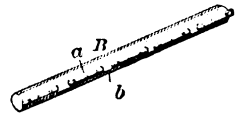

89032—J. Dempsey—*Thill Coupling.*

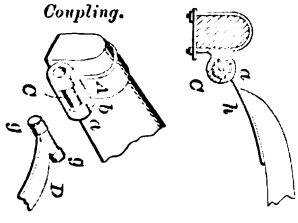

89033—A. Doll—*Sad Iron Heater.*

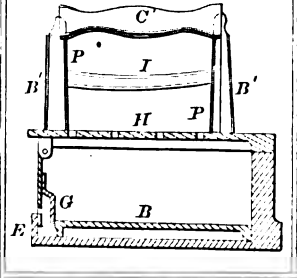

89030—J. W. Culbertson—*Syringe.*

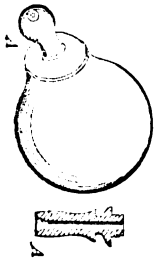

89036—A. C. Garratt—*Voltaic Battery.*

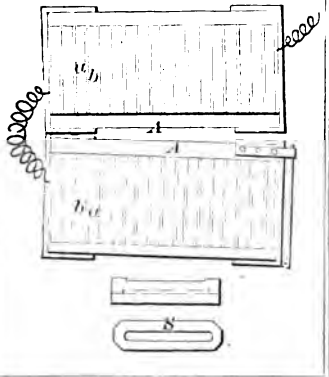

89034—J. Foster—*Safety Pocket.*

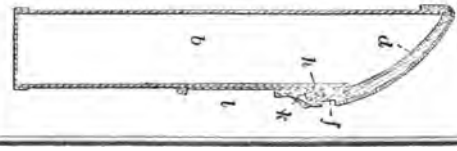

89035—G. C. Gage—*Copying Press.*

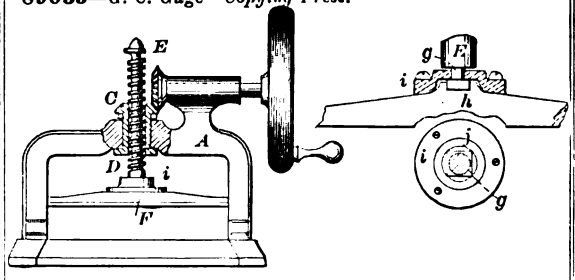

89037—G. S. Grant—*Bracelet Snap.*

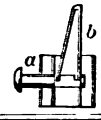

89038—O. E. Greene—*Lubricating Sleeve.*

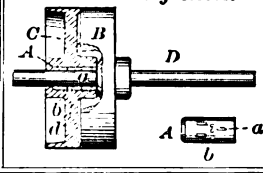

89040—W. S. Guinness—*Sewing Machine.*

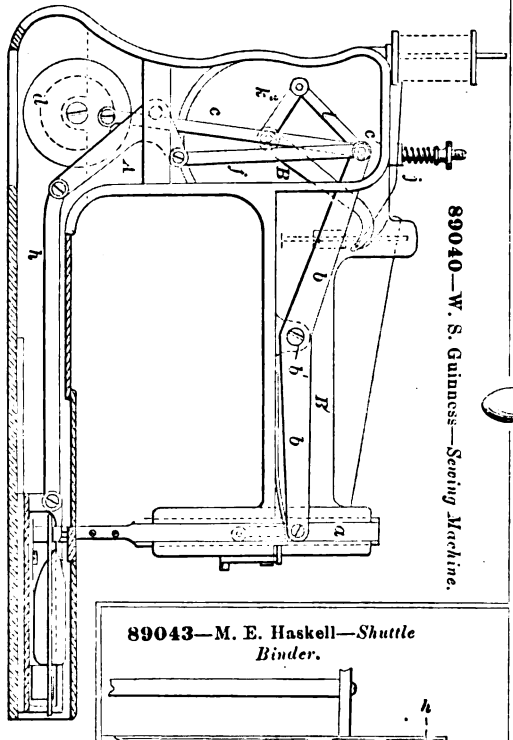

89042—J. H. Harrison—*Saw Sharpening Device.*

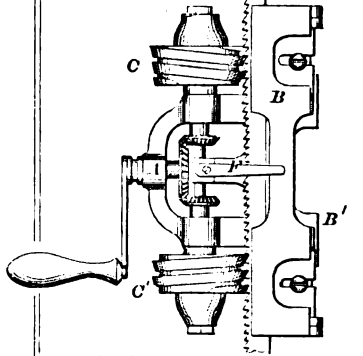

89041—W. Hall—*Mop Wringer.*

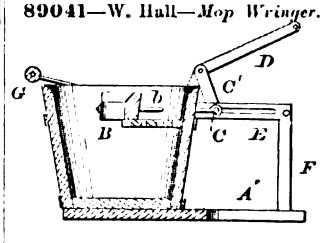

89043—M. E. Haskell—*Shuttle Binder.*

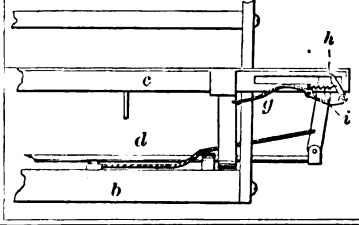

89044—N. L. Hatch—*Tongs.*

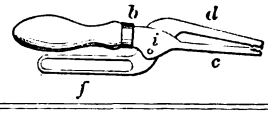

89046—S. B. Holden—*Churn.*

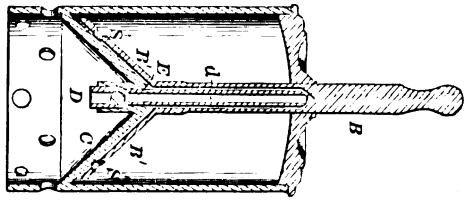

89045—J. Hilts—*Table Leaf Support.*

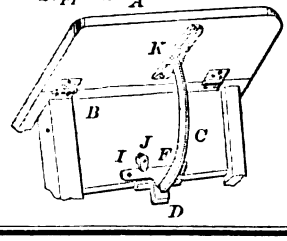

89027—L. R. Comstock—*Car Stove.*

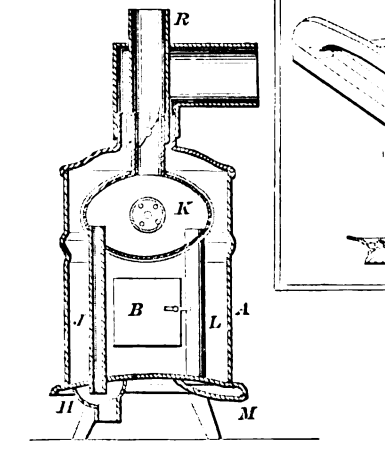

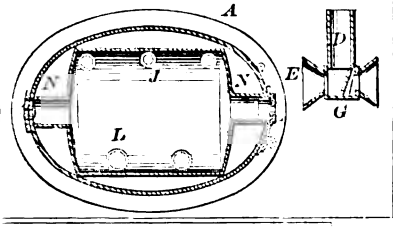

89028—C. F. Corbett—*Fluting Machine.*

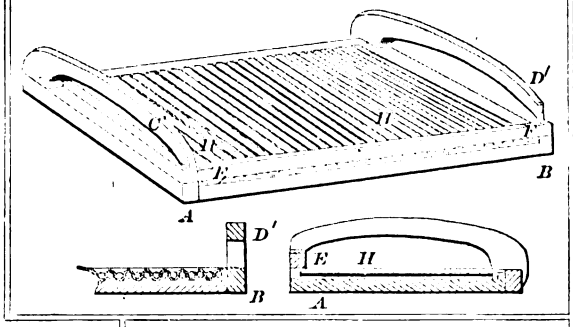

89031—J. Danner—*Shelf, Coat Rack and Clothes Frame.*

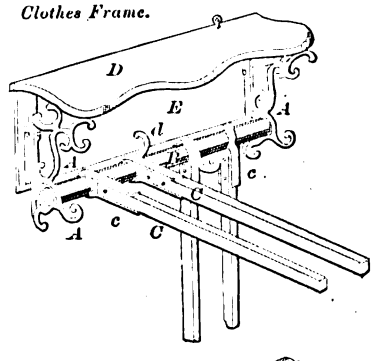

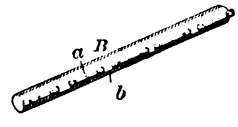

89032—J. Dempsey—*Thill Coupling.*

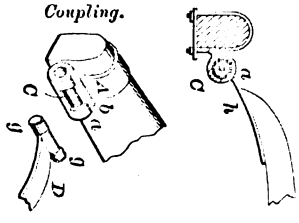

89033—A. Doll—*Sad Iron Heater.*

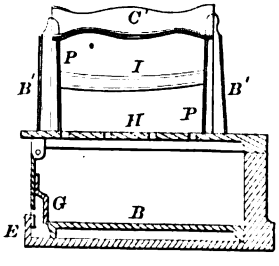

89030—J. W. Culbertson—*Syringe.*

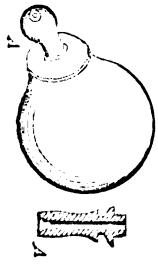

89036—A. C. Garratt—*Voltaic Battery.*

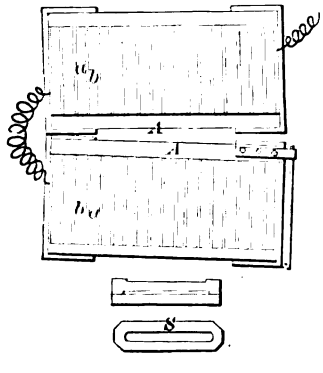

89034—J. Foster—*Safety Pocket.*

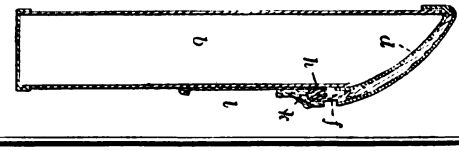

89061—A. McLean—*Car Coupling.*

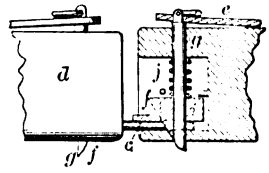

89062—W. Morehouse—*For Punching, Shearing and Straightening Fish Bars.*

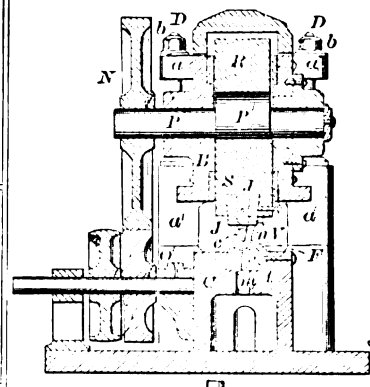

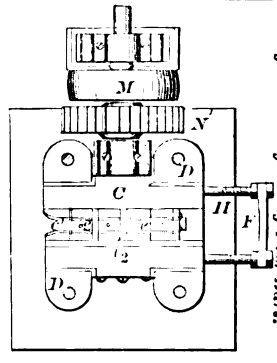

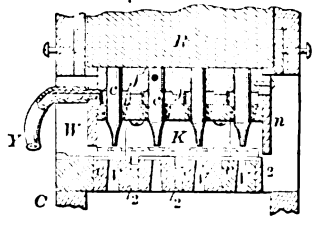

89063—I. Morse—*Water Wheel.*

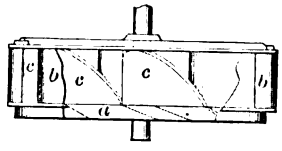

89065—A. Murray—*Power Loom.*

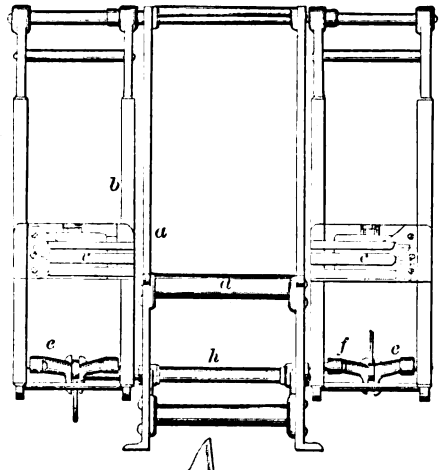

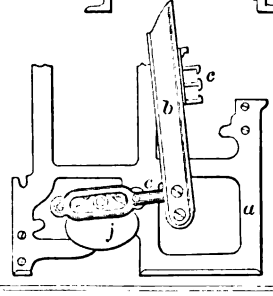

89066—B. W. Nichols—*Jam Nut.*

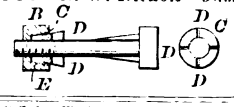

89067—O. Osmundson—*Beehive.*

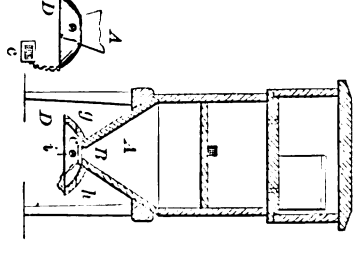

89068—T. F. Palm—*Eavestrough Suspender.*

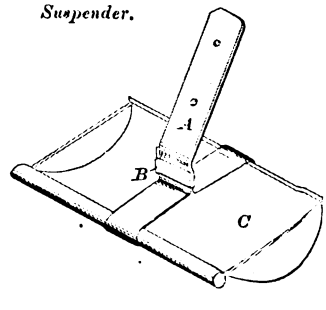

89064—W. Muir—*Sewing Machine.*

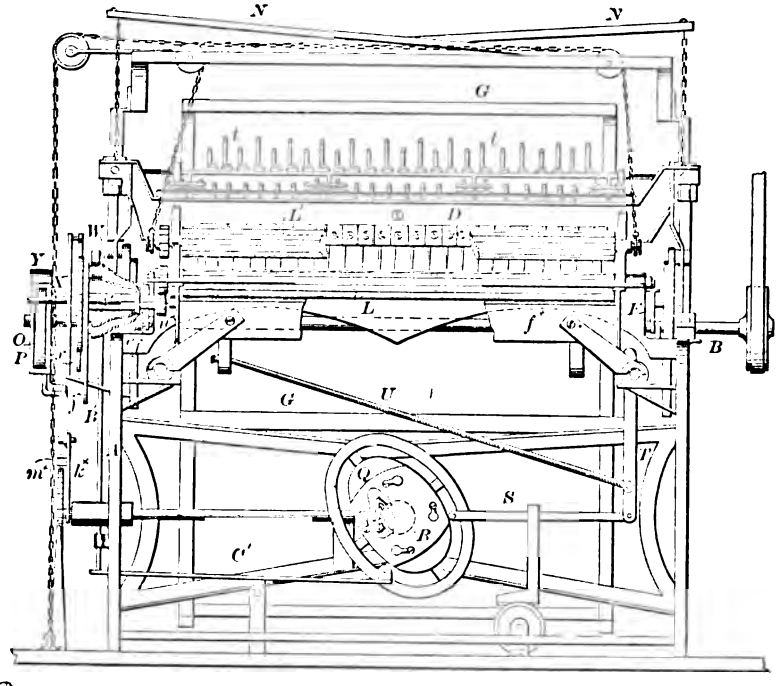

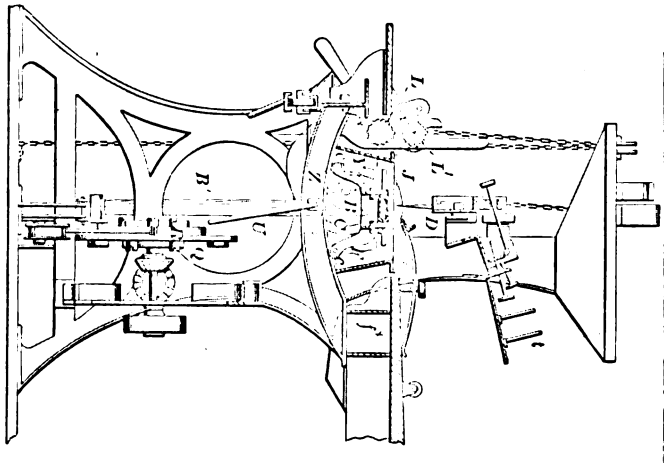

89070—D. C. Pierce—*Railway Rail.*

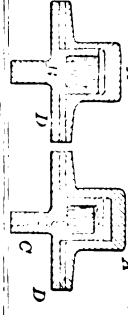

89069—G. T. Parry—*Velocipede.*

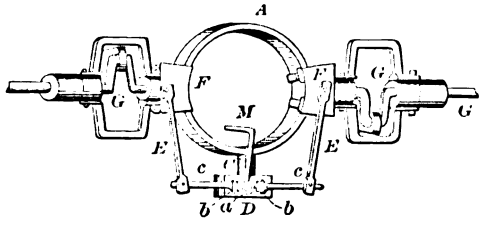

89071—R. Pilling—*Stop Valve*

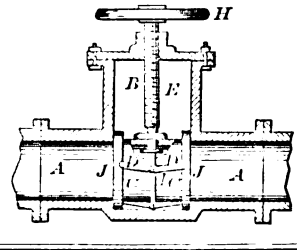

89072—A. Putnam—*Seeding Machine.*

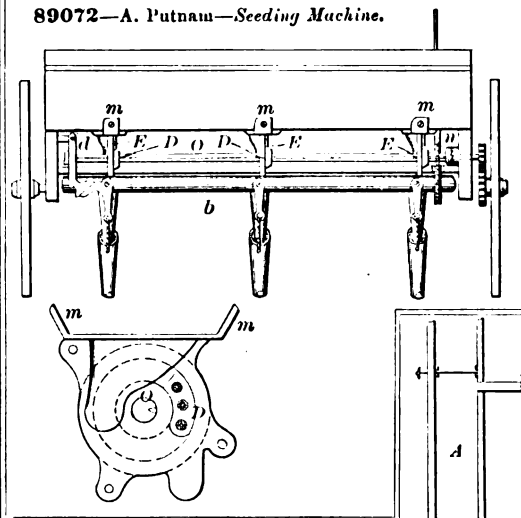

89074—T. Reakirt—*For White Lead.*

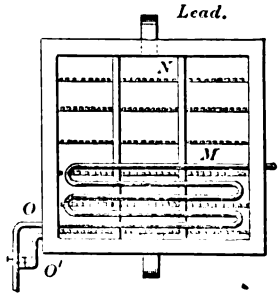

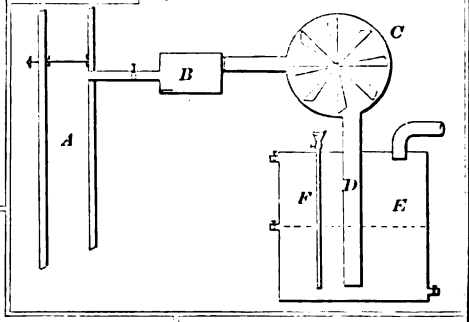

89073—D. Quinn—*Pump Dredge.*

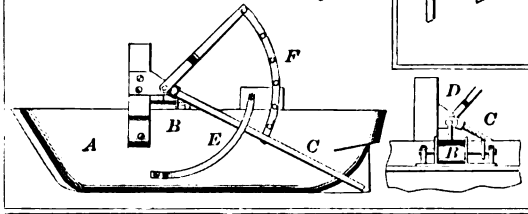

89075—W. G. Reed—*Chimney.*

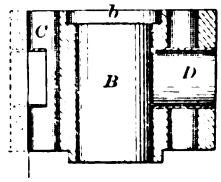

89077—H. A. Reid—*Bag Holder and Truck.*

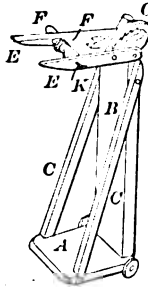

89076—J. Reichenbach—*For Chilled Castings.*

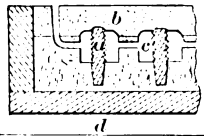

89078—E. B. Rich—*Feed Crib.*

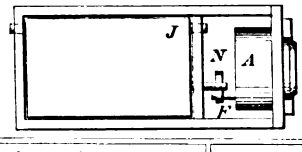

89079—T. C. Robinson—*Railroad Chair.*

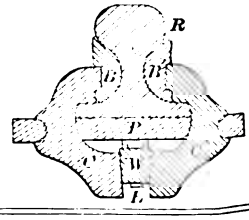

89082—Saltsman, Charlesworth & Osgood—*Harvester.*

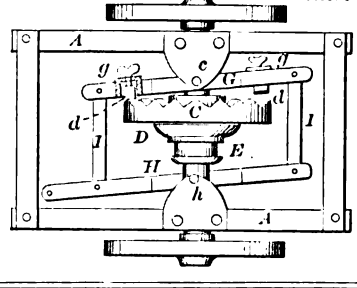

89080—G. W. Rogers—*Pump.*

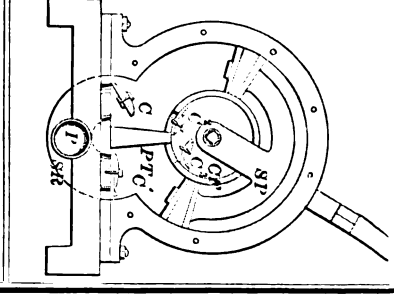

89081—M. M. Rowell—*Seed Separator.*

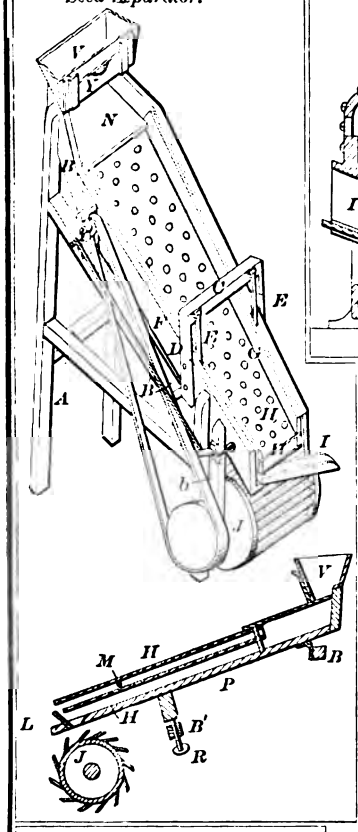

89083—C. G. Sargent—*Cotton Gin*

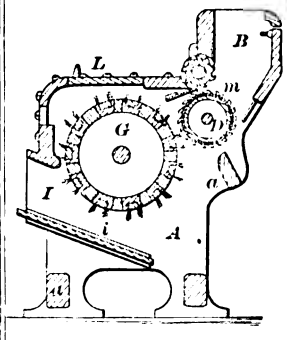

89084—A. Schaffer—*Music Rack.*

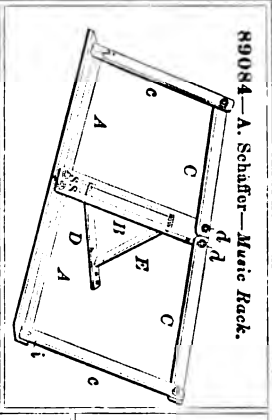

89085—C. Scharffe—*Sewing Machine Attachment.*

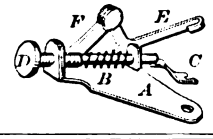

89086—P. Shaw—*Car.*

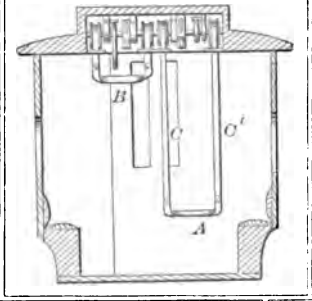

89087—Shirk & Martin—*Boiler Feeder.*

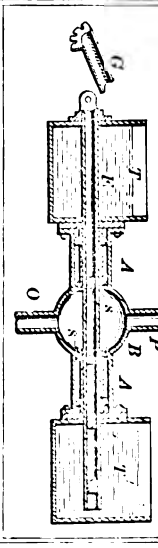

89088—Smith & Storrs—*Cartridge.*

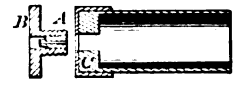

89089—J. F. Spaulding—*Car Coupling.*

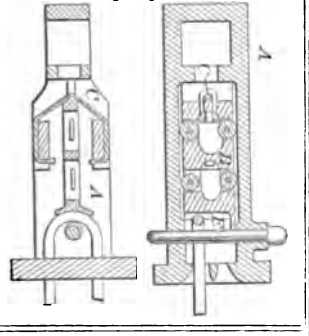

89090—C. A. Stebbins—*Gas Holder.*

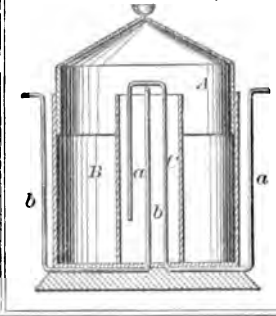

89092—C. A. S. Temple—*Switch.*

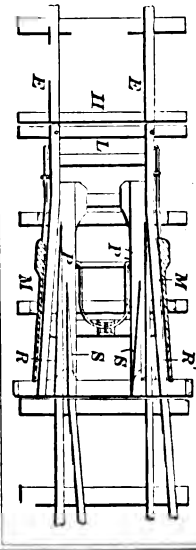

89096—J. H. Tyler—*Horse Shoe.*

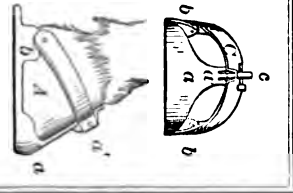

89091—G. P. Sweezy—*For Cutting Garments.*

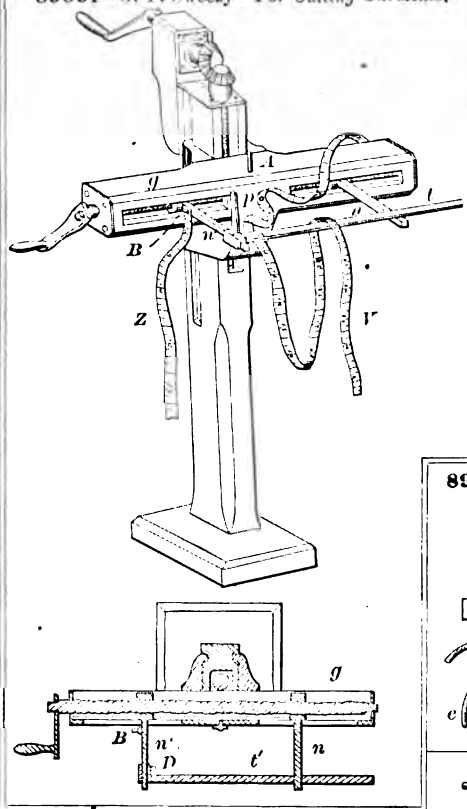

89098—G. W. Warren—*Churn.*

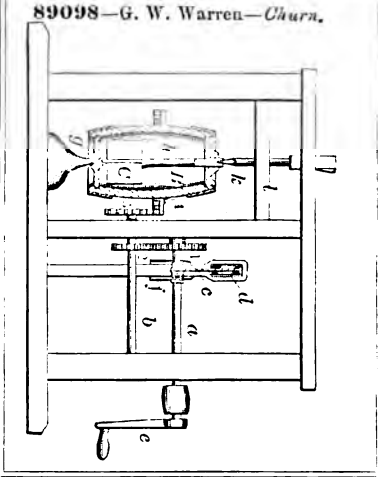

89099—Webster & Powers—*Potato Digger.*

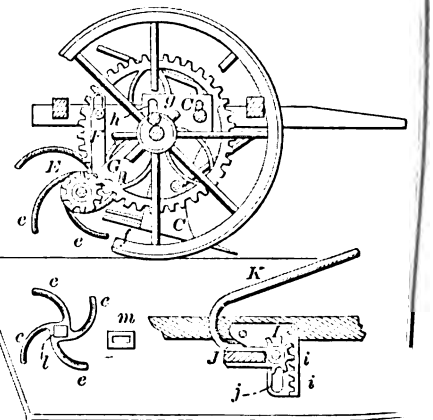

89093—A. Tittman—*Sewing Machine.*

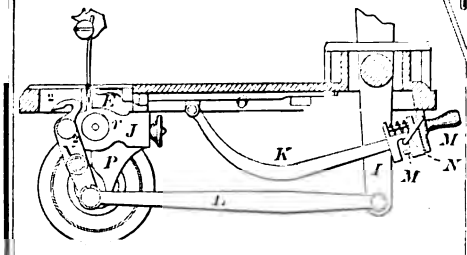

Fig.

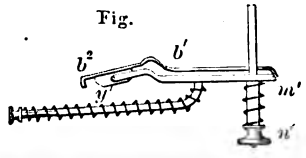

89101—J. S. White—*Door Holder.*

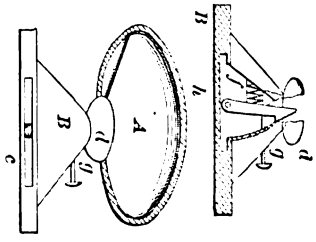

89102—T. E. M. White—*Velocipede.*

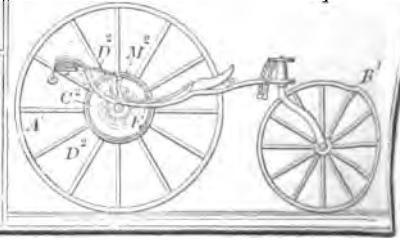

89097—C. Wardwell—*Auger.*

89103—A. Whittemore—*Valve Gearing.*

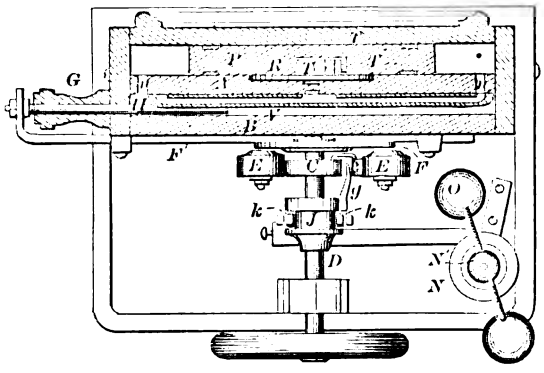

89106—B. F. Wilson—*Filtering Feed Water Heater.*

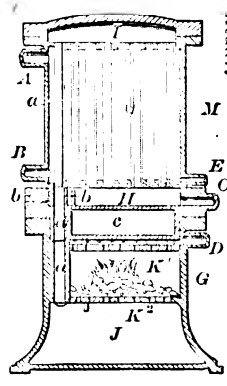

89104—A. Whittemore—*For Sewing Machines.*

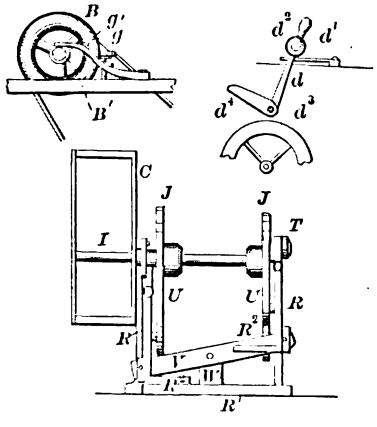

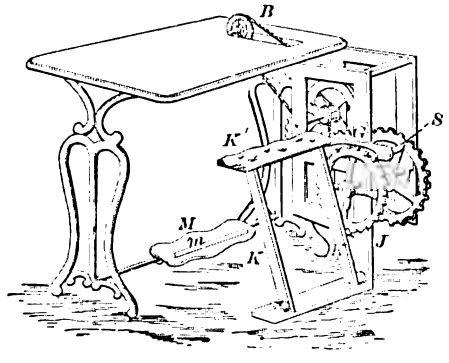

89105—W. Williams—*Insole.*

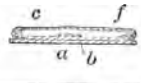

89108—L. C. Woehning—*Size Mark for Hats.*

89110—C. E. Woodman—*Buckle.*

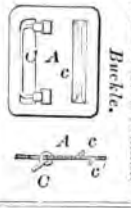

89107—Wilson & Appleyard—*Carpet Stretcher.*

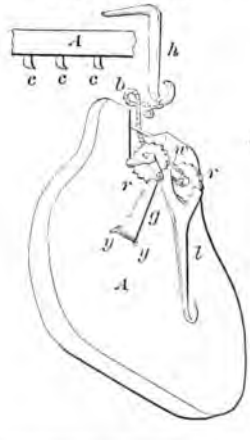

89109—S. S. Woodcock—*Pencil Sharpener.*

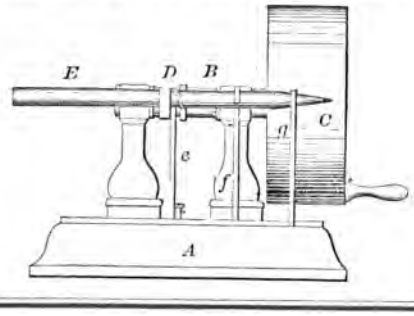

89111—J. A. Woodworth—*For Moving Heavy Bodies.*

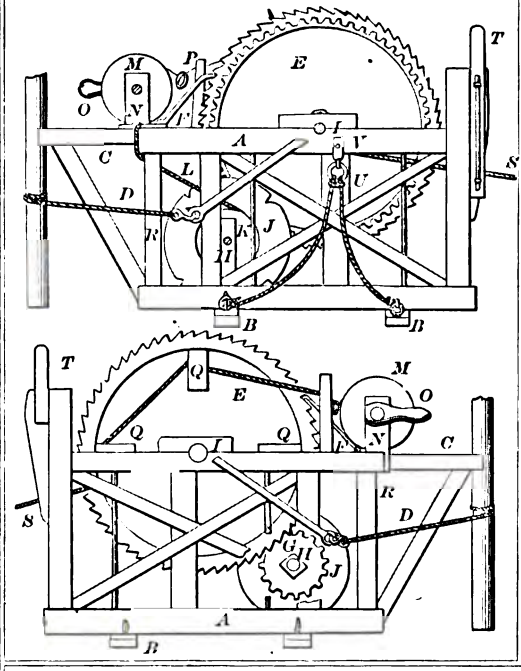

89112—W. S. Wright—*Lathing Machine.*

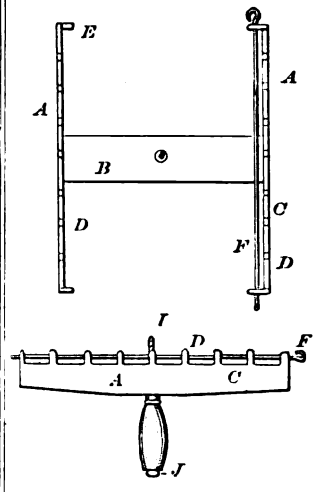

89113—B. Anyan—*Cultivator and Planter.*

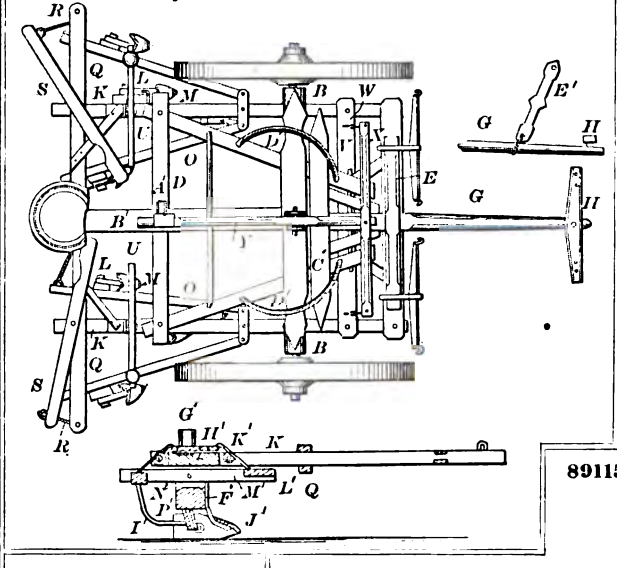

89114—A. Arnold—*Tea Pot Case.*

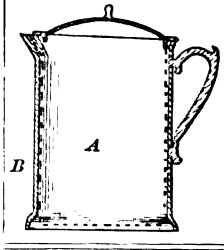

89116—J. Barnes—*Bedstead Fastening.*

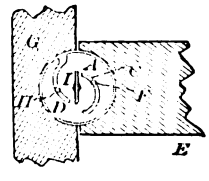

89115—G. M. Atherton—*Plow*

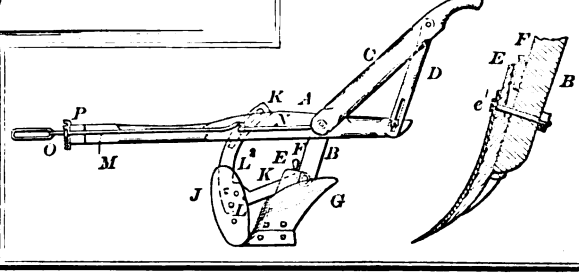

89118—S. S. Bent—*Hook for Supporting Carriage Poles.*

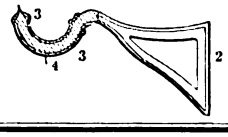

89117—F. Bauschtliker—*Hydrant.*

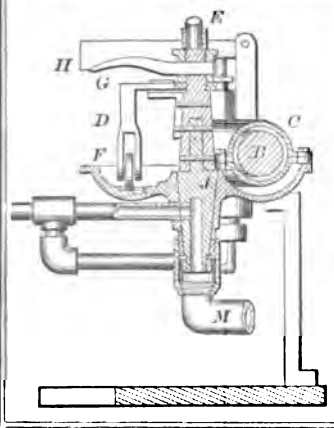

89119—J. Bohmer—*Bedstead.*

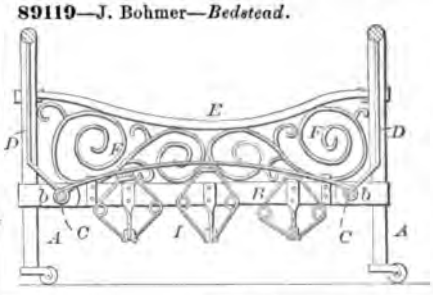

89120—R. O. & D. W. Brackett—*Shaft Support.*

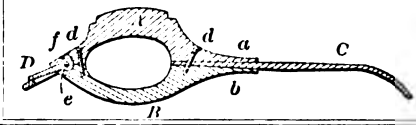

89122—B. S. Brown—*For Compounding and Applying Roofing Compositions.*

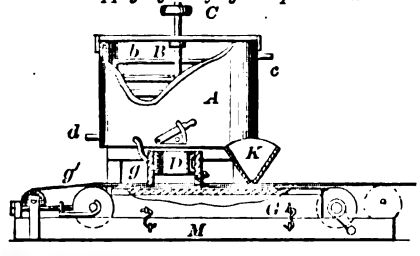

89126—A. M. Cheney—*Curtain Fixture.*

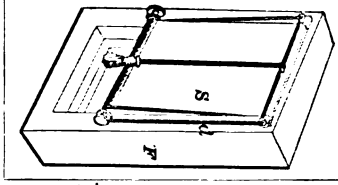

89123—J. G. Bryan—*Hydrant.*

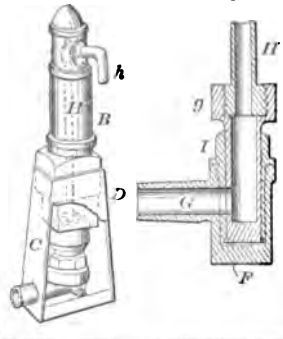

89124—R. & R. T. Burchell—*Mitre Box.*

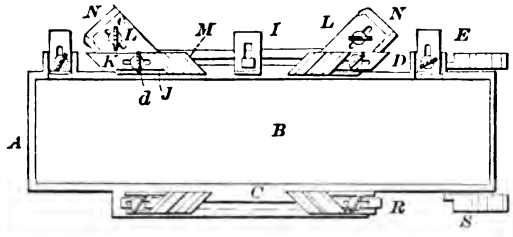

89125—J. Carl—*Churn Dasher.*

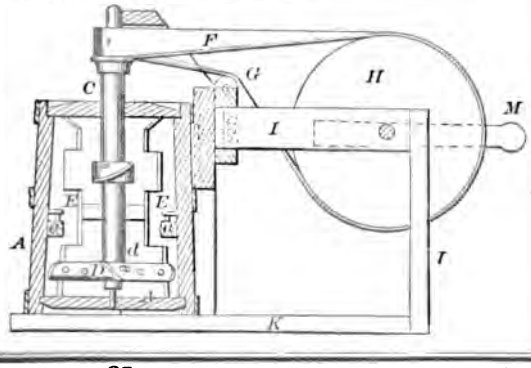

89128—H. S. Cohn—*Velocipede.*

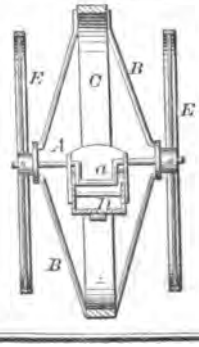

89127—B. F. Cloud—*Blowing Apparatus.*

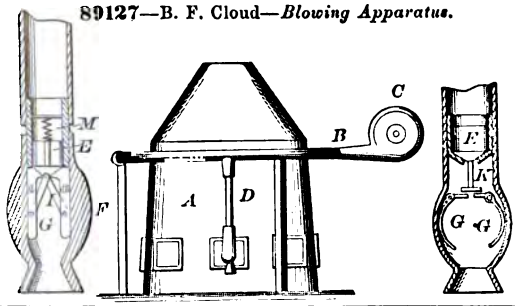

89129—J. H. Crandell—*Beehive.*

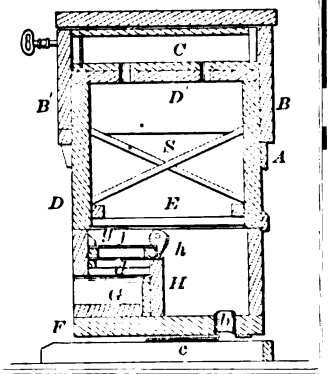

89130—D. S. Cumings—*Vise.*

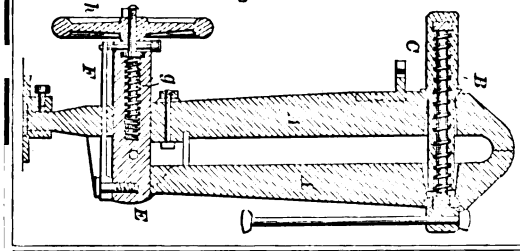

89133—Dorn & Shibley—*Egg Carrier*

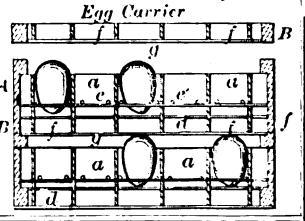

89131—W. A. Daggett—*Clothes Frame.*

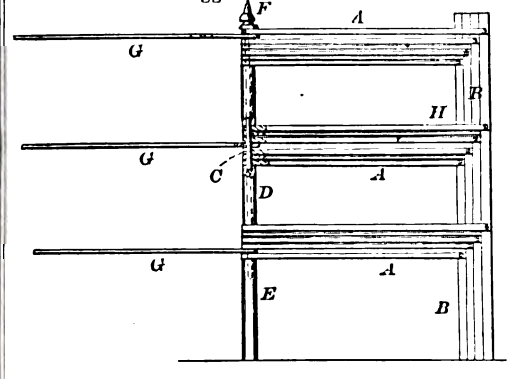

89135—F. B. Dunton—*Mast Hoop.*

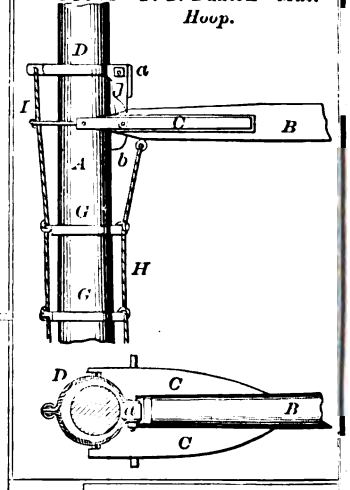

89136—B. W. Field—*Band Drawer.*

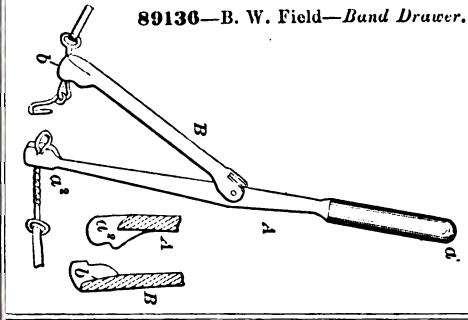

89137—E. L. Freeman—*Cultivator Tooth.*

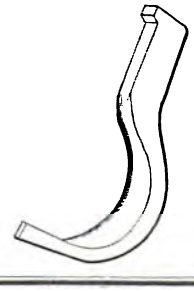

89134—C. H. Duncan—*Tubular Pump.*

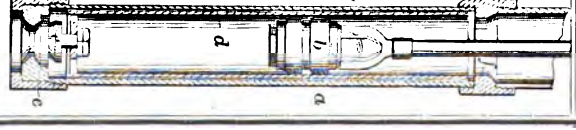

89138—F. H. Furniss—*Vise.*

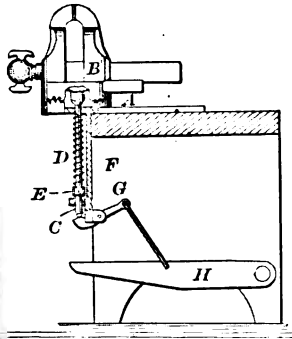

89139—O. L. Gardner—*Cornice.*

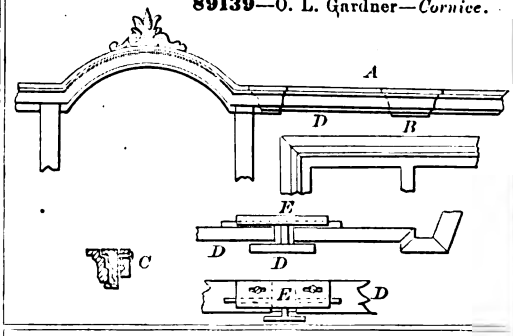

89140—W. B. Gardner—*Washing Machine.*

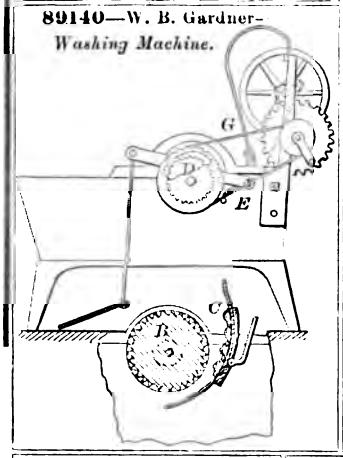

89141—J. H. Goodfellow—*Stove.*

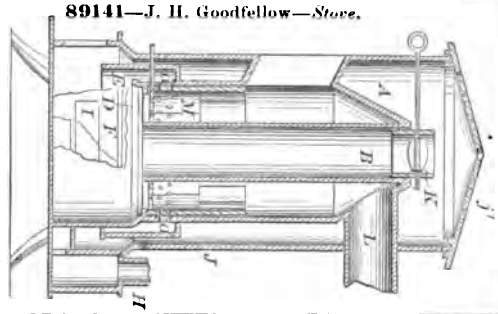

89142—P. Gorsline—*Blotting Pad.*

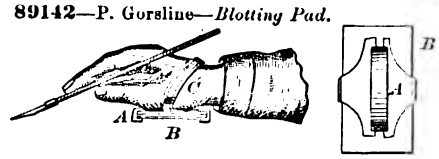

89143—J. Gregg—*Water Cock.*

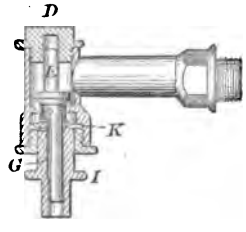

89144—T. J. Hall—*Plow.*

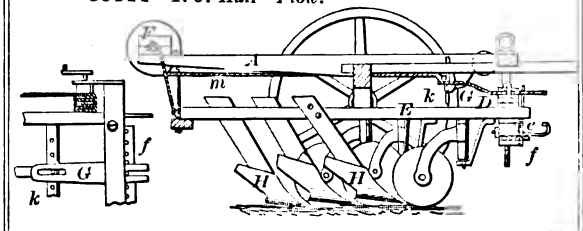

89145—G. Harris—*Car Coupling.*

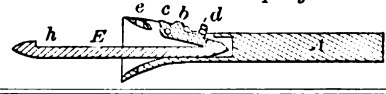

89146—E. D. W. Hatch—*Bedstead Attachment.*

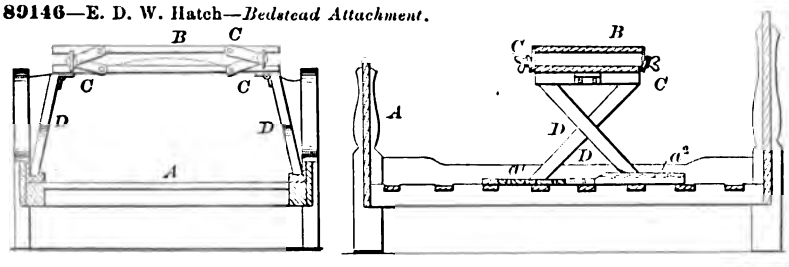

89147—E. W. Haven—*Sash Holder.*

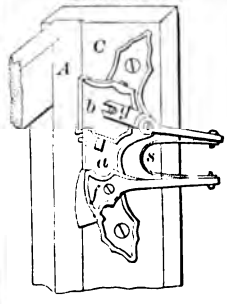

89149—J. Irving—*Velocipede.*

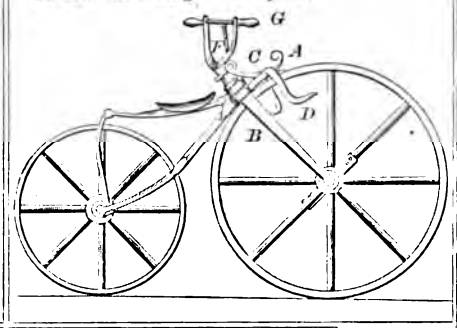

89151—J. Keane—*Valve.*

89148—C. S. Hurlbut—*Burial Casket.*

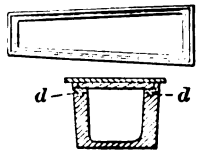

89150—S. E. Jowett—*Shutter Worker.*

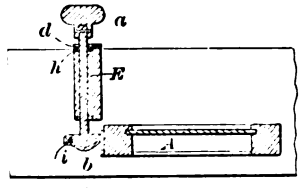

89152—J. L. Kendall—*Garment Supporter.*

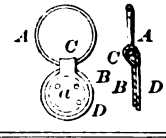

89153—Lettelier & White—*Weighing Machine.*

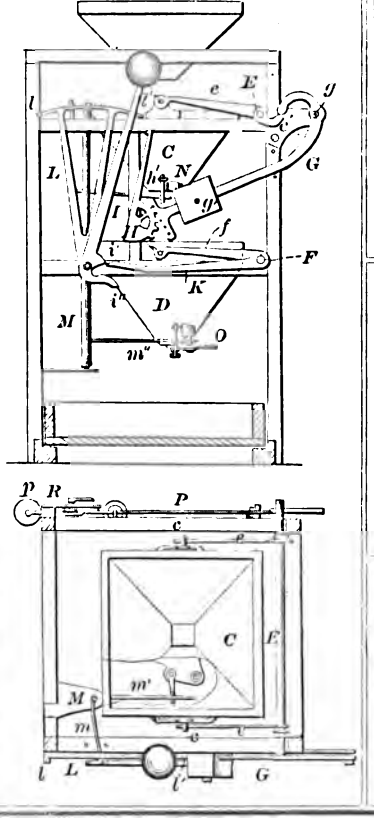

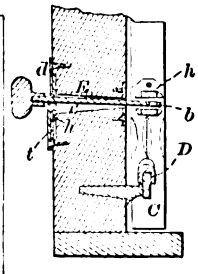

89155—P. F. Lewis—*Churn.*

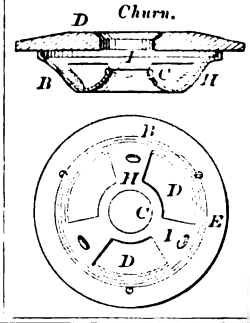

89156—W. A. Lighthall—*Steam Engine.*

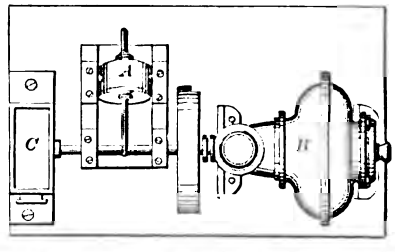

89157—R. M. Livingston—*Cheese Vat.*

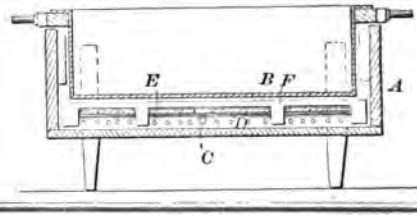

89154—Lettelier & White—*Weighing Machine.*

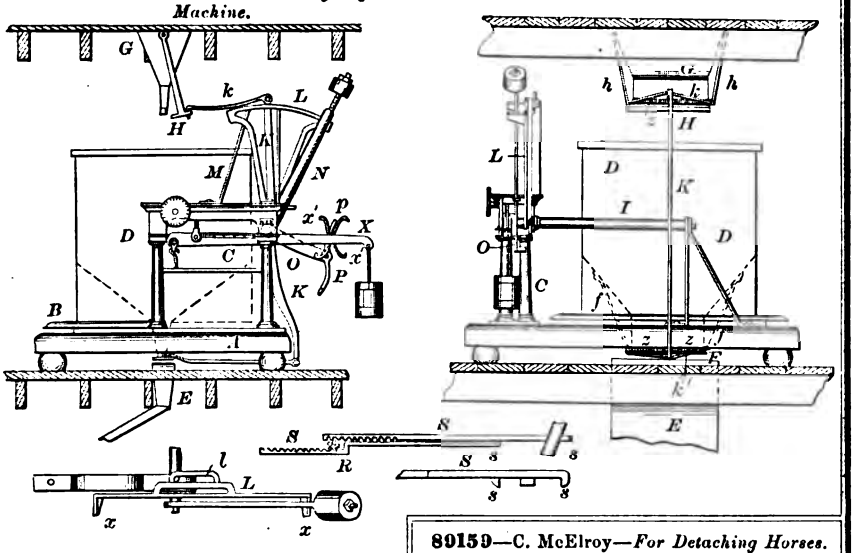

89158—J. McCoskey—*Steam Pump.*

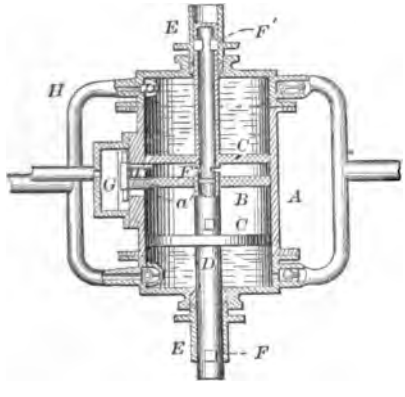

89159—C. McElroy—*For Detaching Horses from Carriages.*

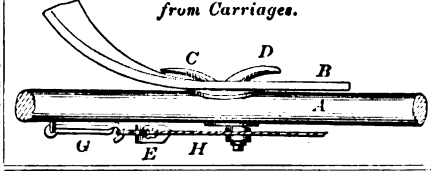

89161—D. V. Miller—*Lock*

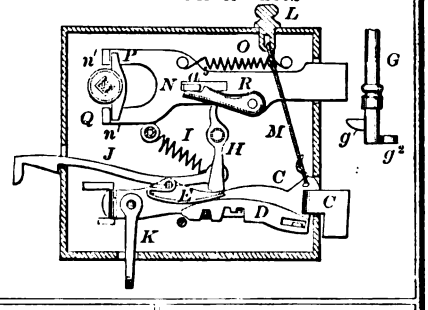

89160—G. W. Middlecoff—*Horse Rake.*

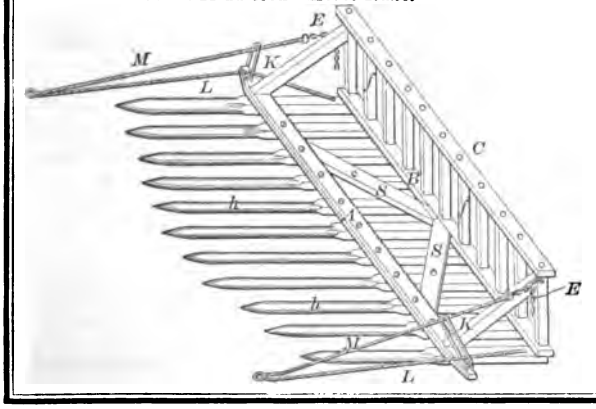

89162—J. C. Miller—*Ironing Board.*

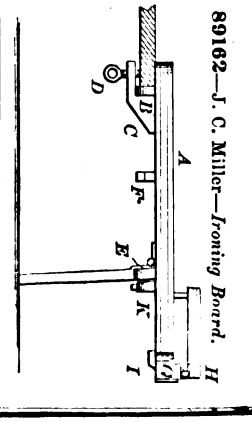

89163—B. F. Mohr—*Wood Boring Machine.*

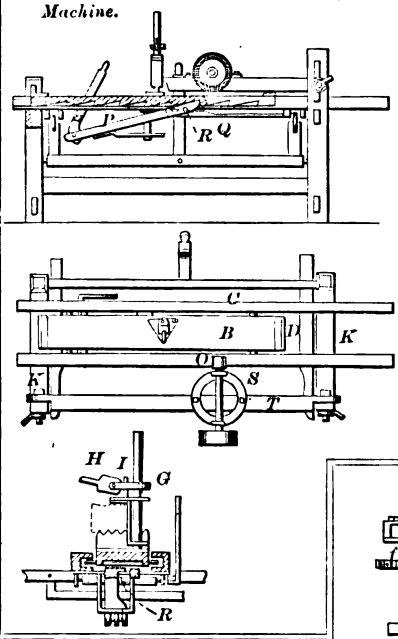

89164—S. R. Niles—*For Pulling Beans.*

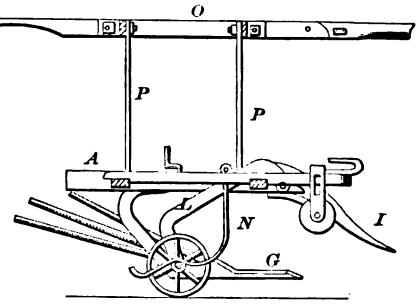

89165—R. H Parks
Horse Shoe.

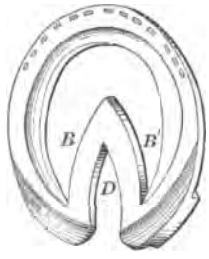

89166—J. Pinter—*Washing and Wringing Machine.*

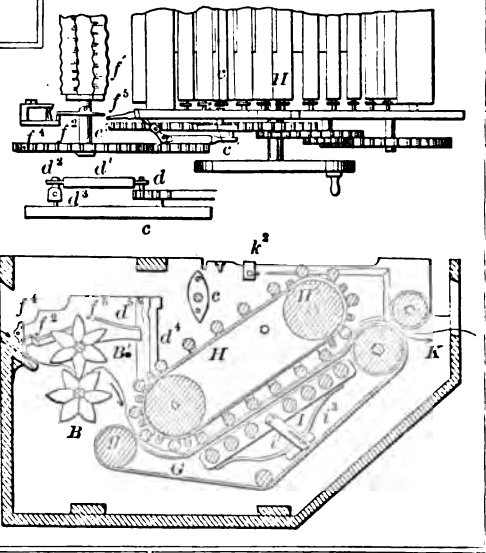

89167—C. Pratt—
Can Nozzle.

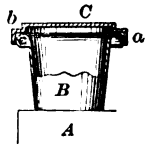

89168—A. C. Rand—*Whip.*

89170—C. Roberts—*For Twisting Tubes for Spinning Machines.*

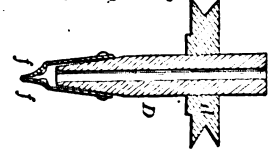

89169—G. M. & C. C. Richardson—*Horse Rake.*

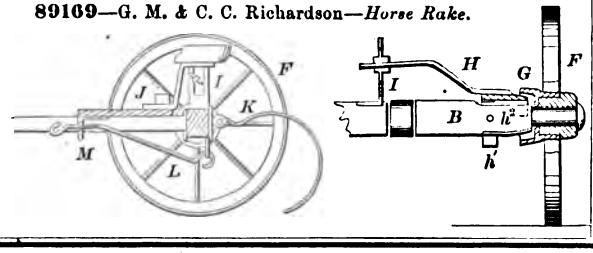

89172—E. B. Rowe—
For Lumber.

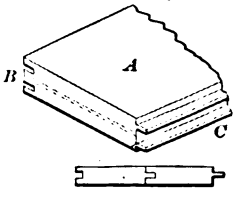

89171—F. W. Roth—*Hat Rack.*

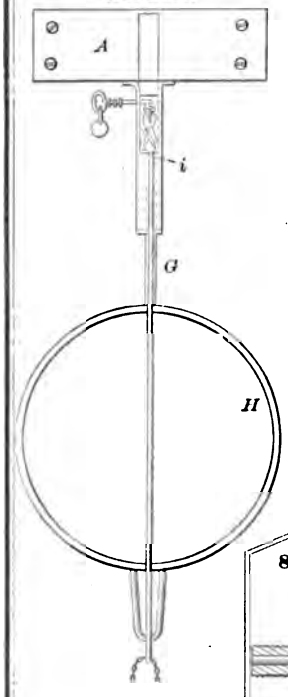

89173—E. Sander—*Medicine Chest.*

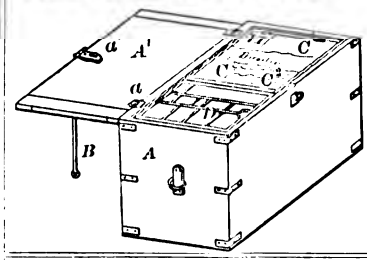

89174—A. Selkirk—*Egg Carrier.*

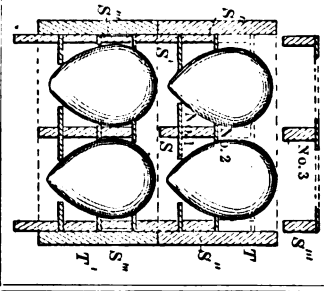

89176—C. F. Shourds—*Feather Duster.*

89175—A. Shafer—*Lubricator.*

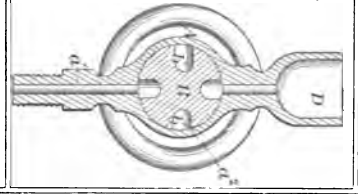

89181—Stoddard & Hoyt—*Stove Pipe Attachment*

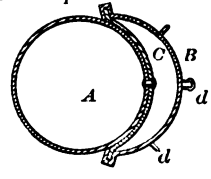

89177—D. Slate—*For Metal Planers.*

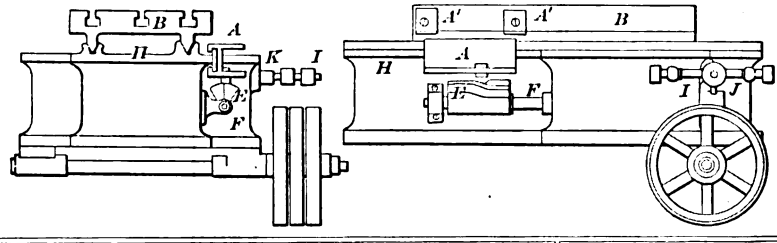

89178—C. Sommer—*Saw Mill.*

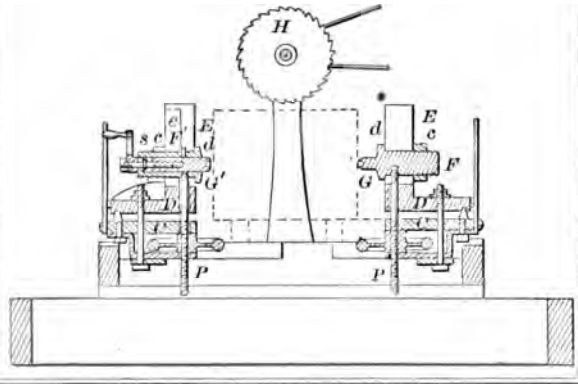

89179—J. Spear—*Stove Collar and Damper.*

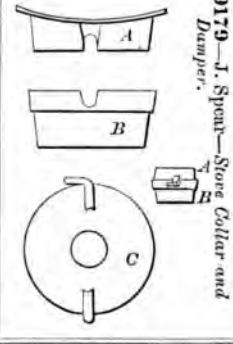

89180—J. Spear—*Stove.*

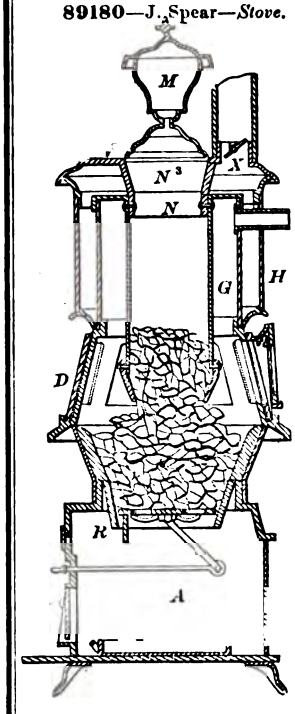

89182—M. Sweet—*Curry Comb.*

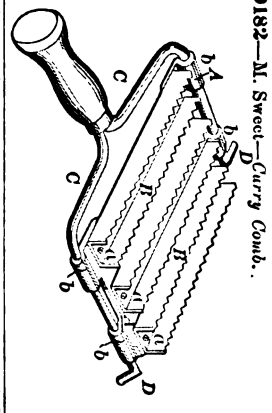

89183—S. D. Tucker—*For Making Printers' Rules.*

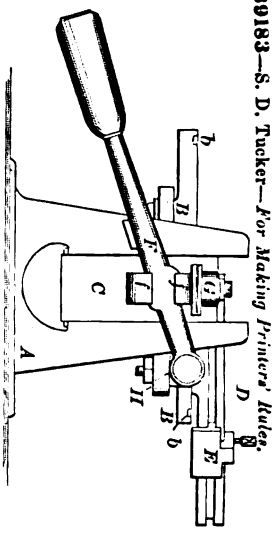

89184—W. Tweedle—*For Making Plugs.*

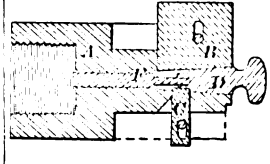

89188—J. F. Wachsmuth—*For Transferring Oil Paintings.*

89185—J. S. Van Buren—*Stove.*

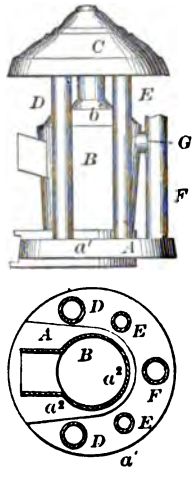

89190—W. Zeiger—*Potato Peeler.*

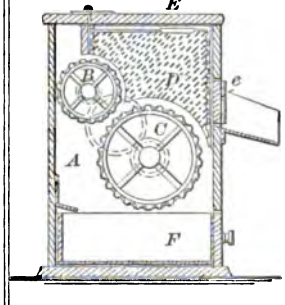

89189—F. Wilcox—*Boiler.*

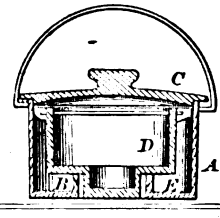

89191—Arnold & Steele—*Door Bolt.*

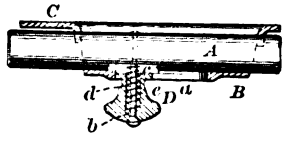

89192—A. M. Bakewell—*Harrow and Cultivator.*

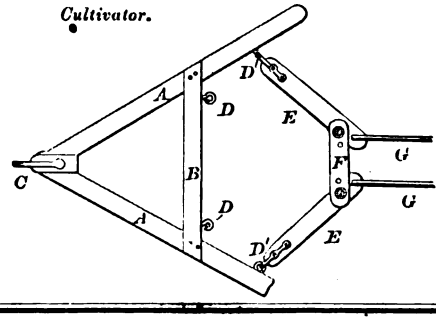

89193—J. F. Baldwin—*Lock Alarm.*

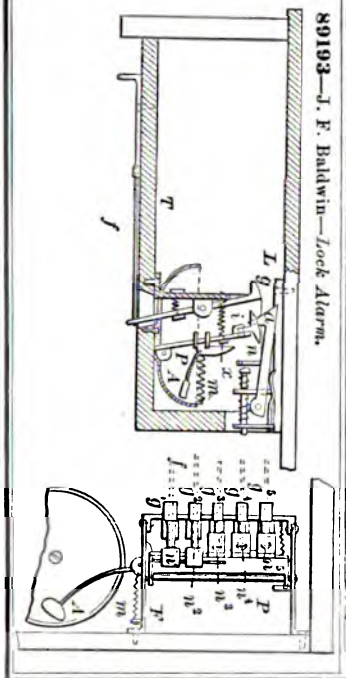

89194—J. W. Bates—*Harvester Binding Attachment.*

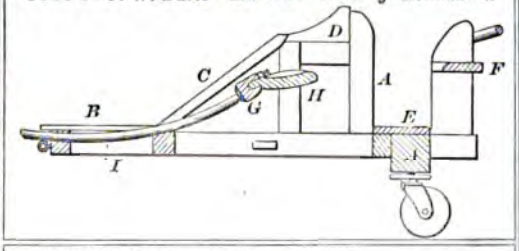

89196—V. Borst—*Harness Saddle*

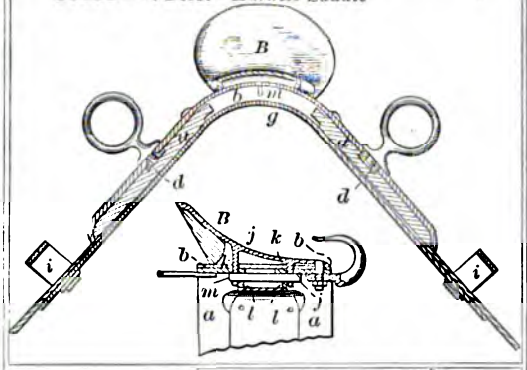

89197—E. W. Brettell—*Latch.*

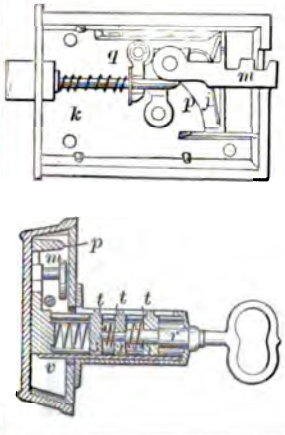

89201—O. Cogsil—*Ferry Railway.*

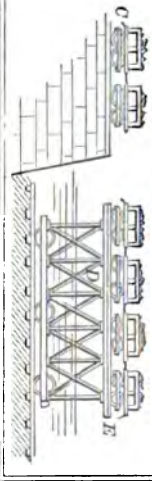

89199—R. Gordon—*Drain Tile Machine.*

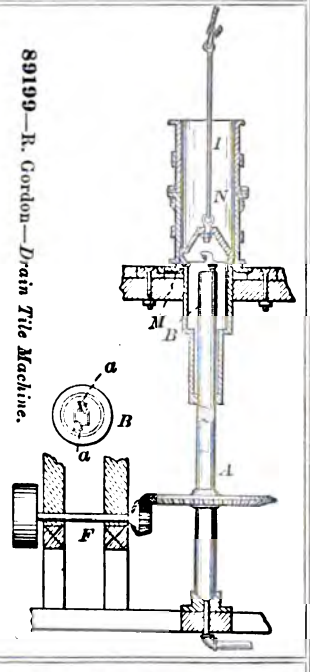

89202—E S. Cram—*Car Coupling.*

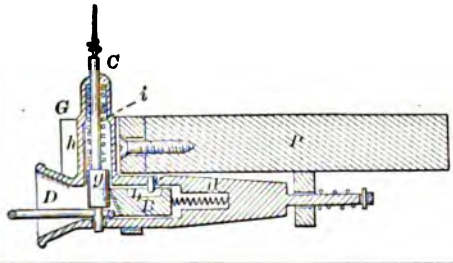

89204—E. A. Dana—*Fuse.*

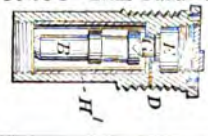

89200—G. B. Clarke—*Cigar Machine.*

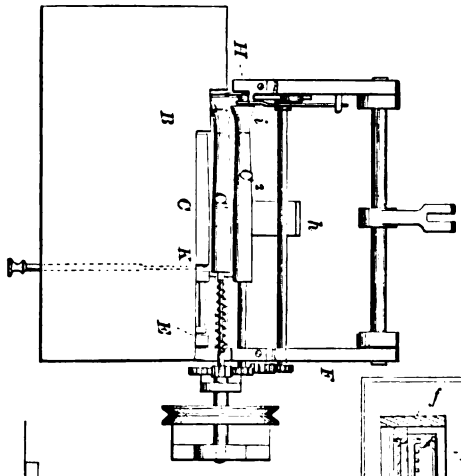

89203—A. D. Dailey—*Fireplace.*

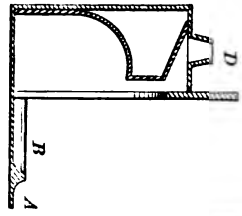

89206—J. Davis—*Nut Fastener.*

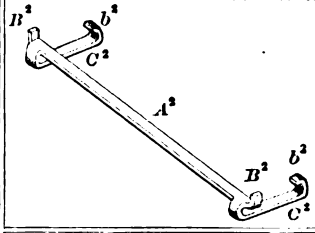

89205—D. A. Danforth—*Sash Operator.*

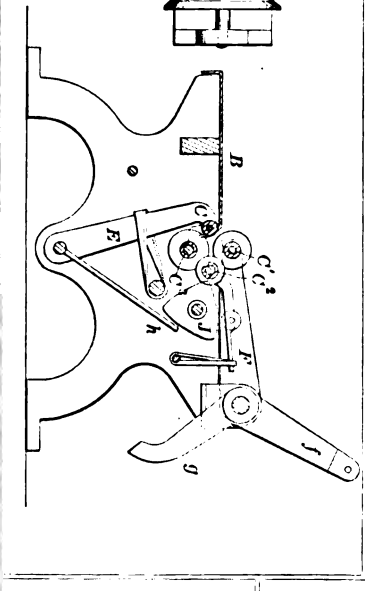

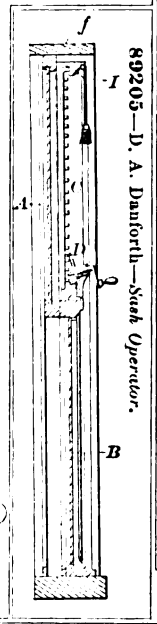

89207—G. Dryden—*Wood Working Machine.*

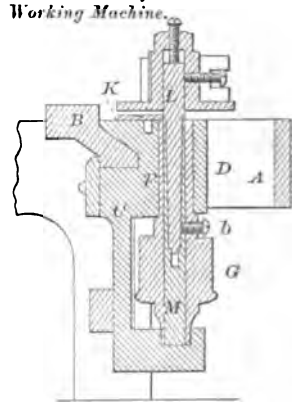

89208—W. F. Duerr—*Feed Water.*

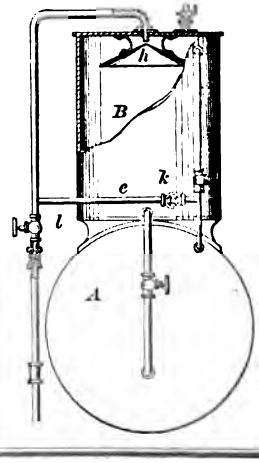

89209—E. S. Earley—*Bedstead Fastener.*

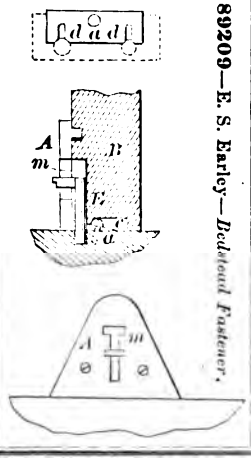

89210—Z. Eastman—*For Railways.*

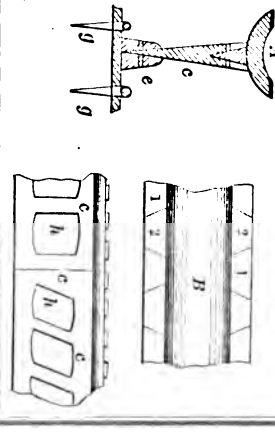

89211—C. H. & J. F. Emerson—*For Making Bolt Heads.*

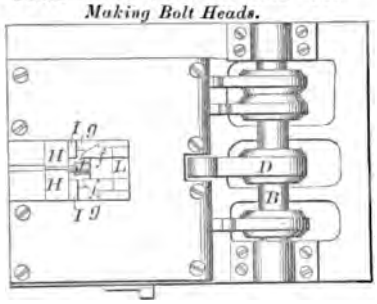

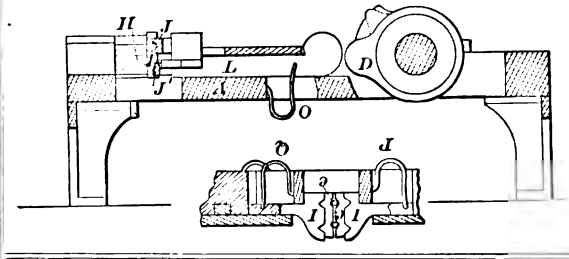

89212—O. B. Gallup—*Comb.*

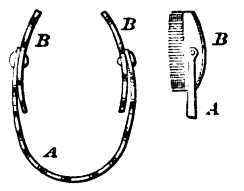

89213—J. C. Gaston—*Stamp Canceler.*

89214—J. Grant—*For Turning Book Leaves.*

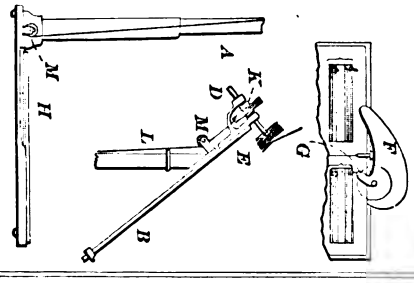

89215—J. J. Groshans—*Counting Register.*

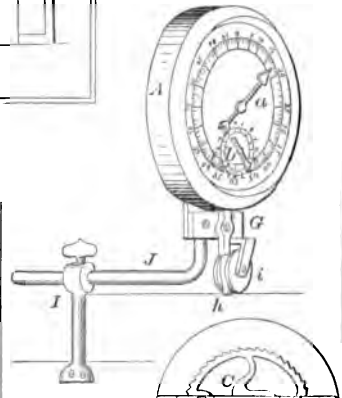

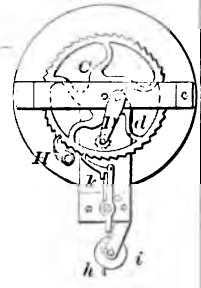

89217—E. R. Hall—*Wood Sawing Machine.*

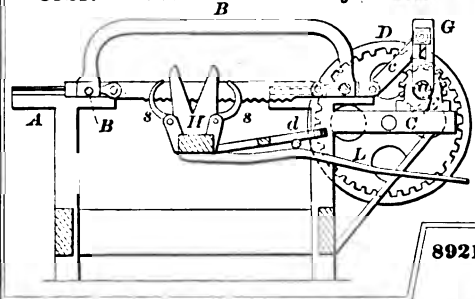

89216—D. Guptail—*Dish Washing Machine.*

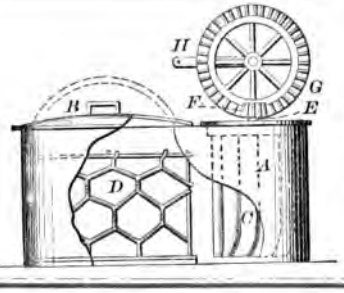

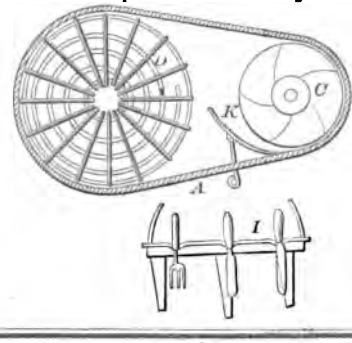

89218—C. H. Hardy—*Knife Cleaner.*

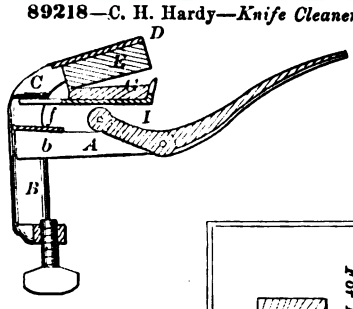

89219—S. Harnden—*Cabinet Ventilator.*

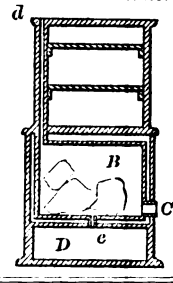

89220—J. H. Hawes—*For Paper Stock.*

89221—J. H. Hawes—*For Reducing Wood for Paper Stock.*

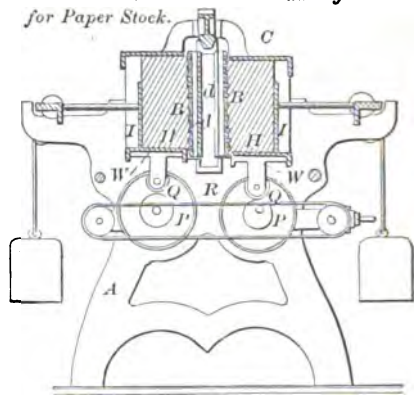

89222—T. N. Hickcox—*Brush Handle.*

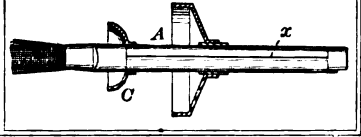

89223—F. W. Hudson—*Stove Shelf.*

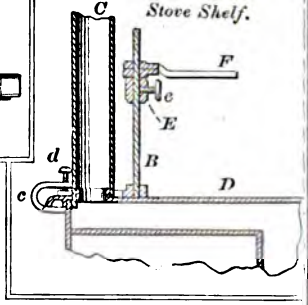

89224—J. & J. A. Huggett—*Horse Shoe Nail Machine.*

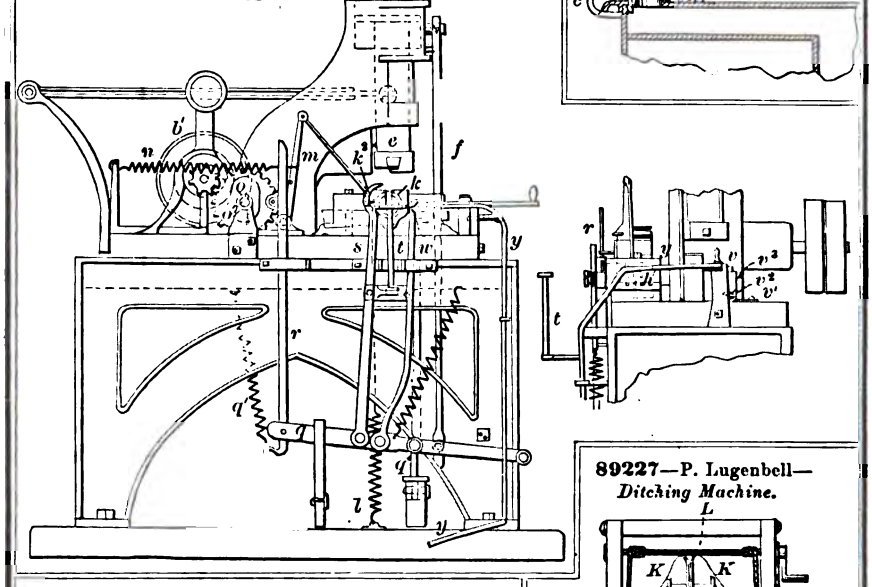

89226—R. Kent—*Punching Apparatus.*

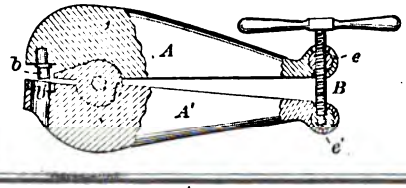

89227—P. Lugenbell—*Ditching Machine.*

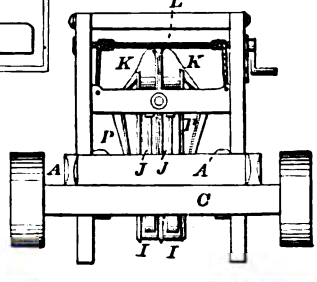

89225—G. Johnston—*Still.*

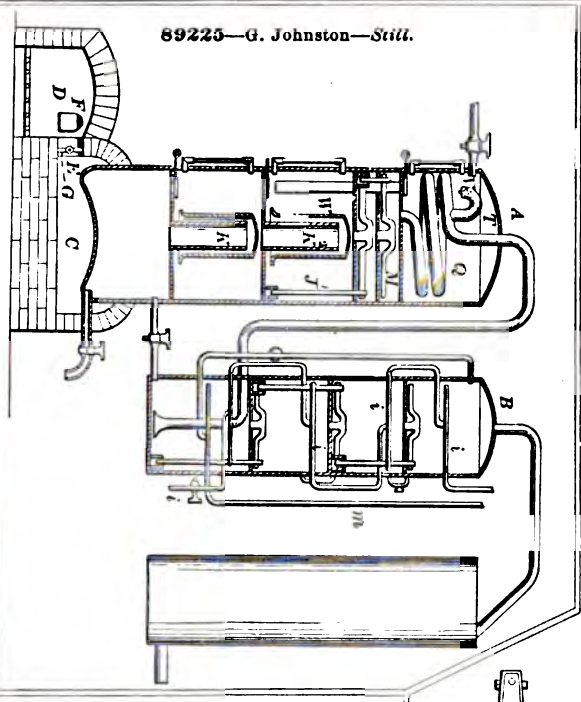

89230—B. Merritt, Jr.—*Lawn Mower.*

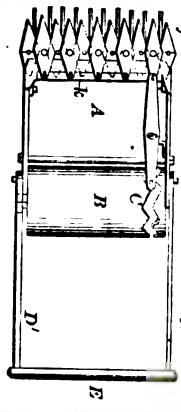

89231—D. S. Merritt—*Propelling Apparatus.*

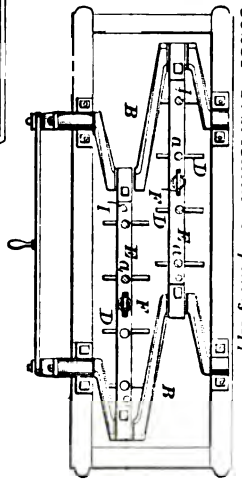

89229—S. Mawhinney—*Last.*

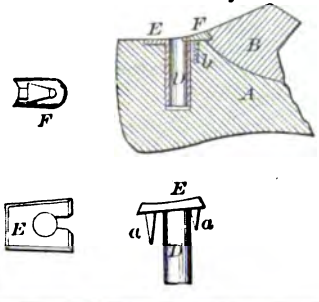

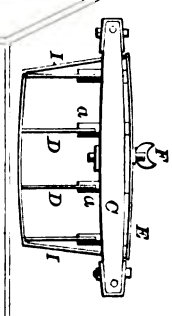

89232—J. W. Morgan—*Anchor.*

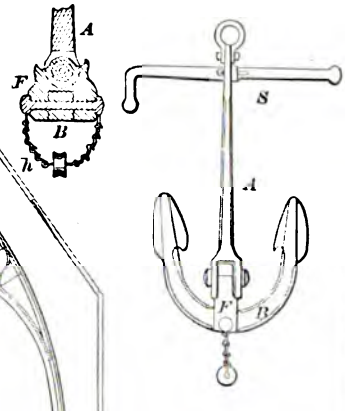

89233—R. P. Morgan, Jr.—*Railway.*

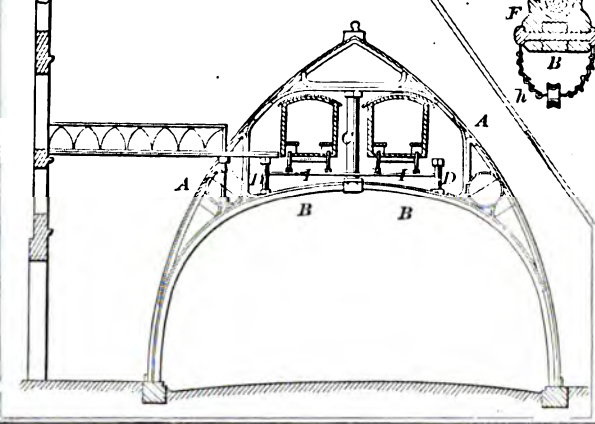

89234—S. Oedamer—*Washing Machine.*

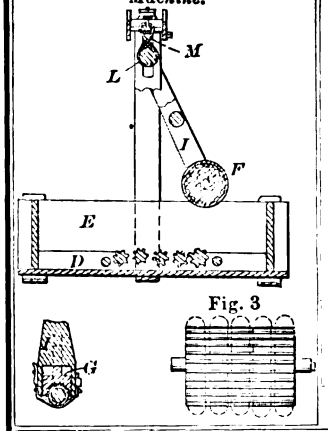

Fig. 3

89235—A. O'Neill—*Velocipede.*

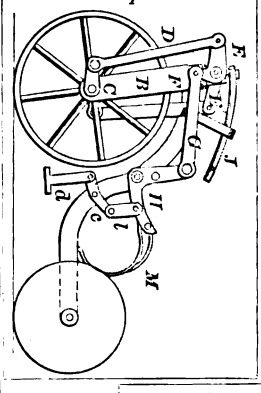

89236—J. H. Owen—*Harvester Cutter.*

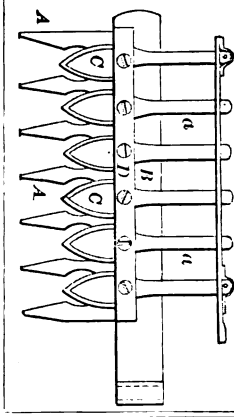

89237—J. A. B. Patterson—*Plow Cleaner.*

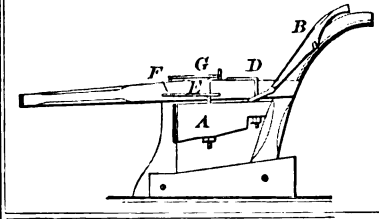

89238—J. A. B. Patterson—*Harrow.*

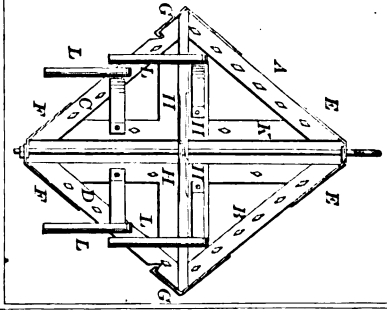

89239—T. T. Prosser—*Furnace.*

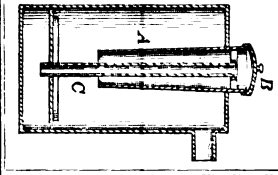

89240—T. T. Prosser—*Steam Generator*

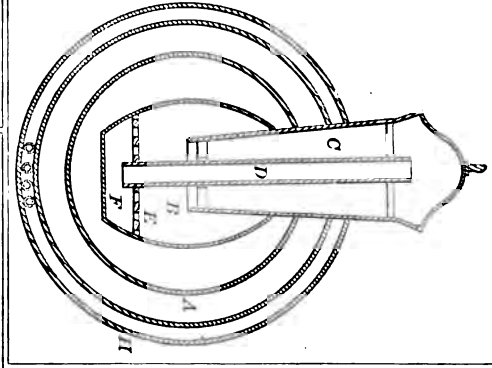

89241—T. T. Prosser—*Steam Generator.*

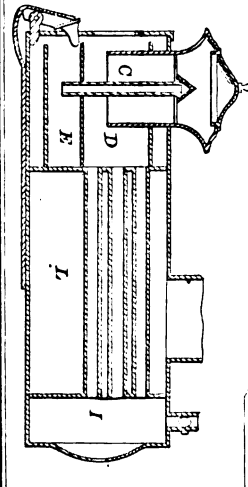

89242—W. S. Rabb—*Plow.*

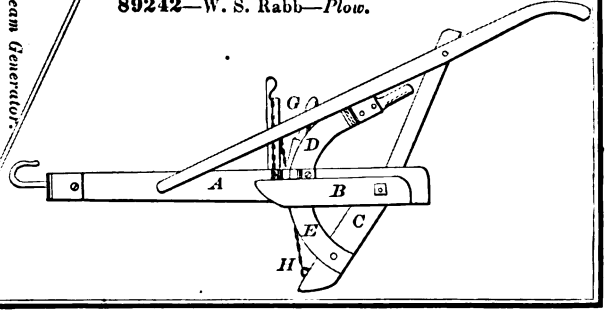

89243—J. H. Racey—*Refrigerator.*

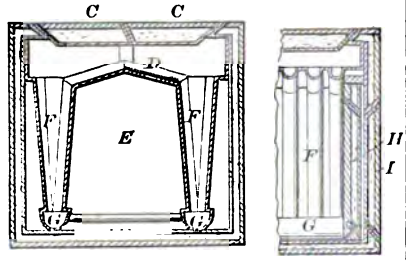

89244—I. L. G. Rice—*Inking Apparatus for Printing Presses.*

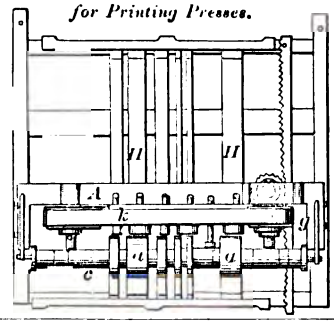

89245—S. M. Richardson—*Tenoning Machine.*

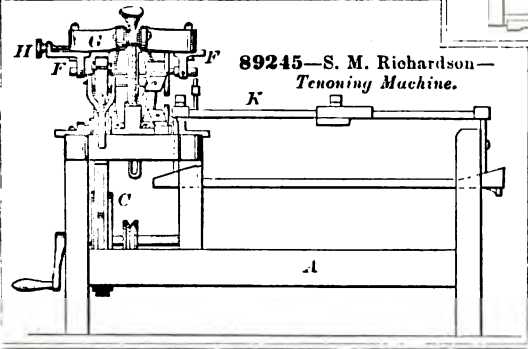

89248—J. Q. C. Searle—*Stove.*

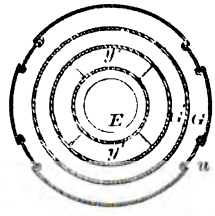

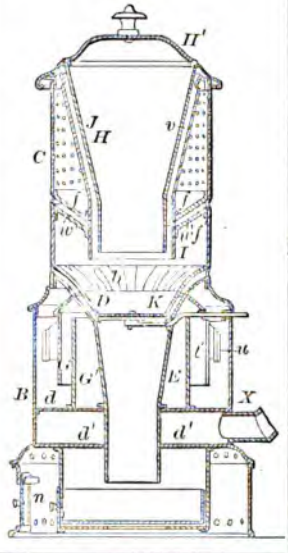

89246—J. M. Riley—*Press for Pens, Buttons, Jewelry, &c.*

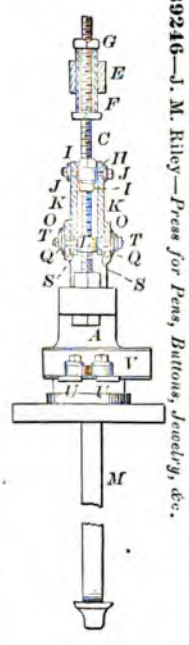

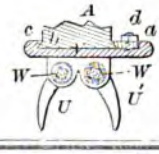

89247—P. J. Schmitt—*Grain Drill.*

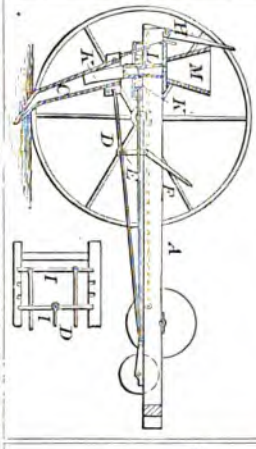

89249—J. Sheffield—*Steam Generator.*

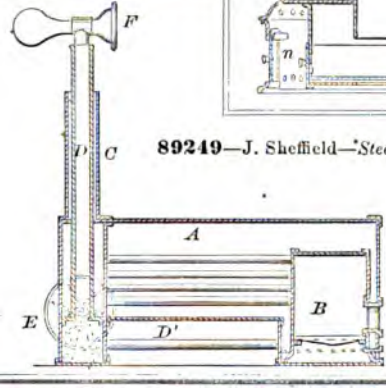

89250—T. Sloat—*Cracker Machine.*

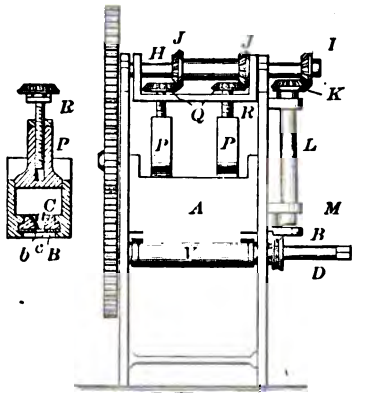

89251—A. C. Stannard—*Washing Machine.*

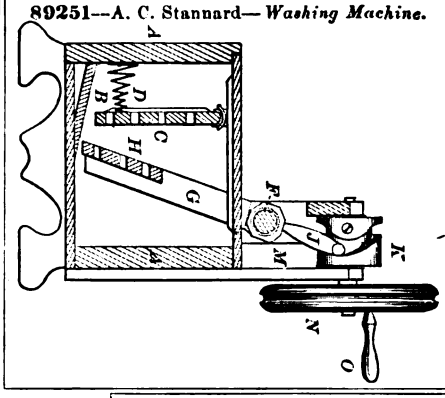

89252—N. Stockwell—*Table.*

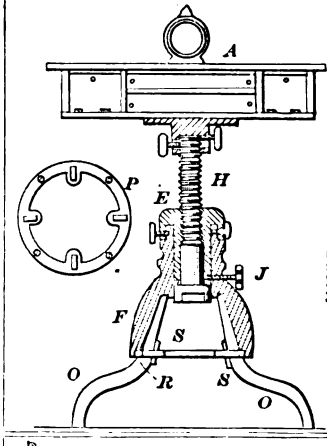

89256—W. C. A. Thielepape—*Needle Threader.*

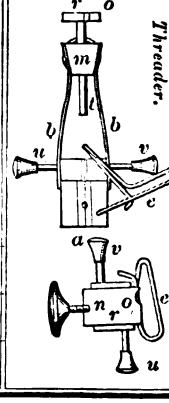

89260—R. B. Willis—*Store.*

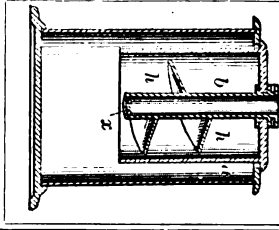

89250—M. N. Ward—*Horse Rake.*

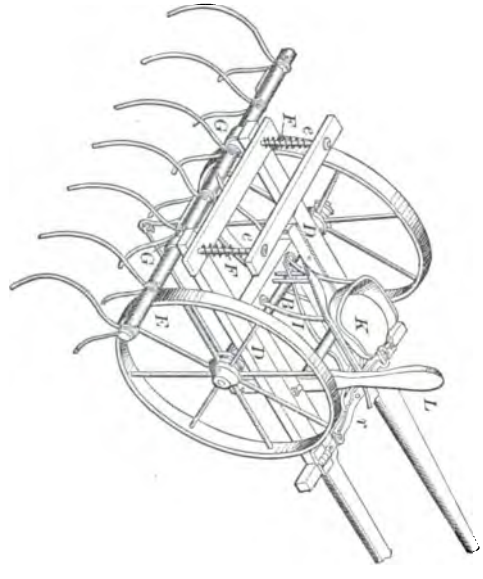

89255—J. Stutt—*For Disintegrating Wood.*

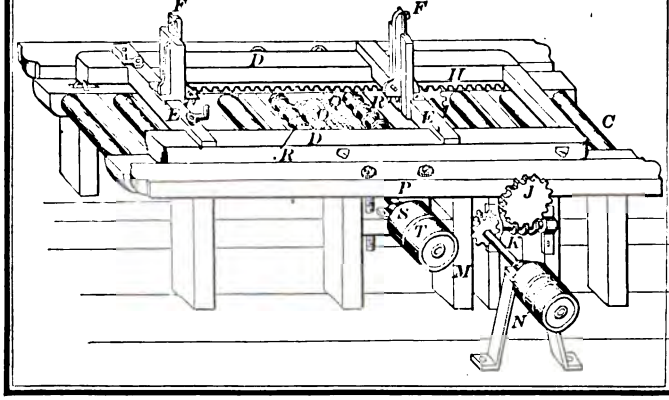

89243—J. H. Racey—*Refrigerator.*

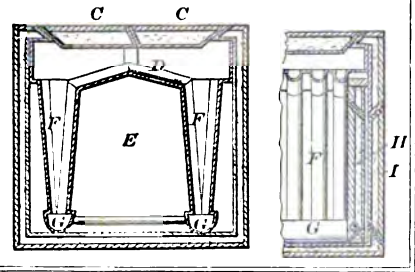

89244—I. L. G. Rice—*Inking Apparatus for Printing Presses.*

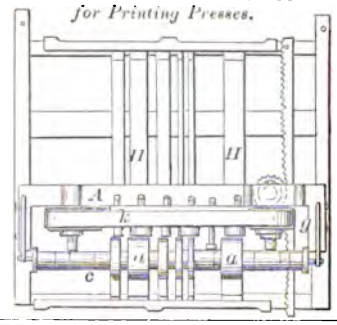

89245—S. M. Richardson—*Tenoning Machine.*

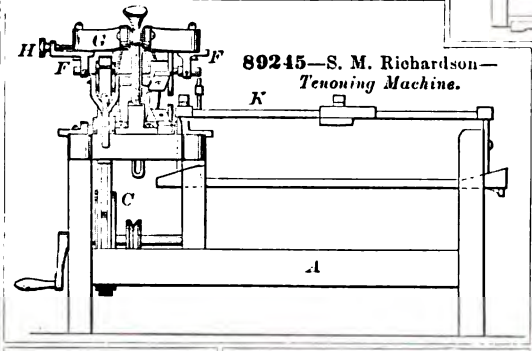

89248—J. Q. C. Searle—*Stove.*

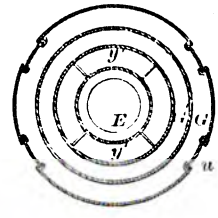

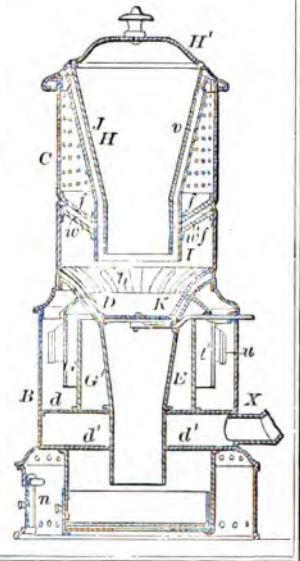

89246—J. M. Riley—*Press for Pens, Buttons, Jewelry, &c.*

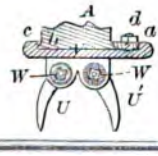

89247—P. J. Schmitt—*Grain Drill.*

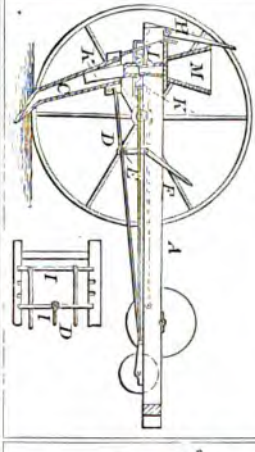

89249—J. Sheffield—*Steam Generator.*

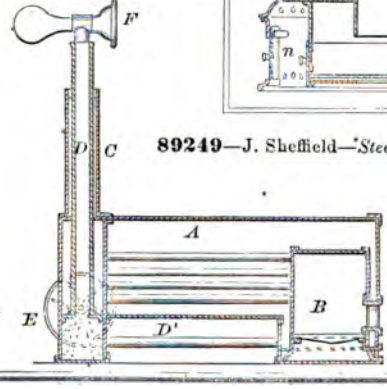

89265—E. G. Lamson—*Stone Channeling Machine.*

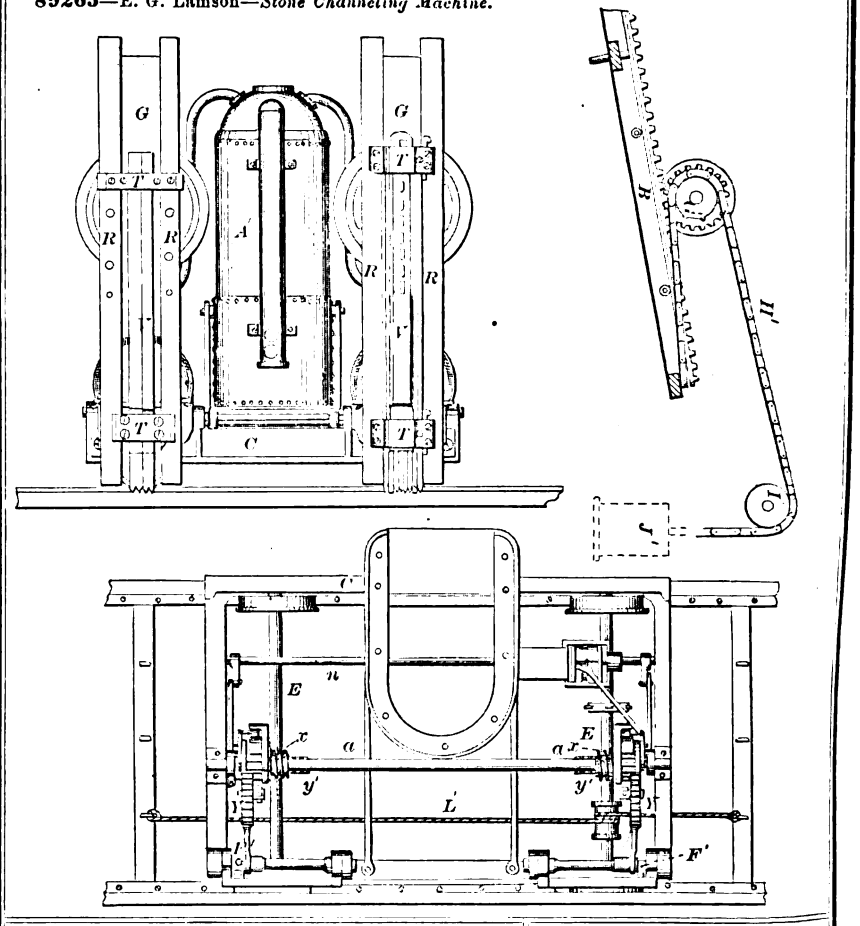

89266—J. M. Blaisdell—*Table.*

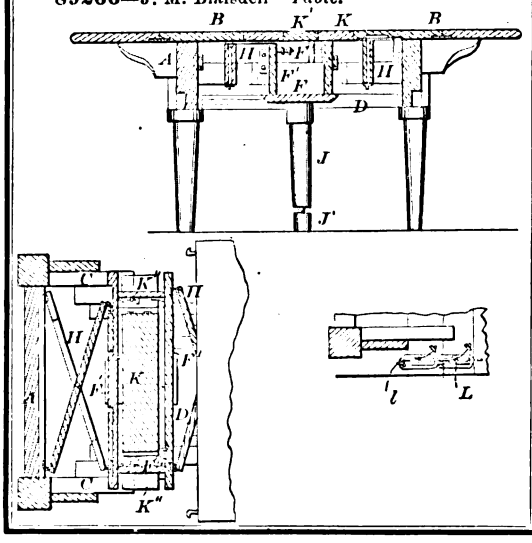

89268—M. L. Andrew—*Pump.*

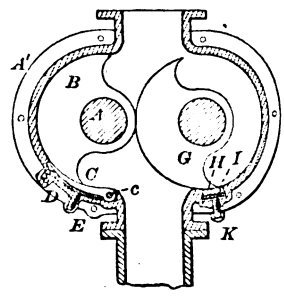

89258—E. Weston—*Steam Generator.*

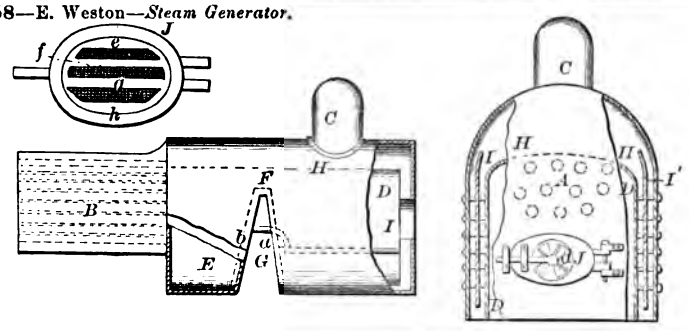

89261—D. W. Wyman—*Locomotive Furnace.*

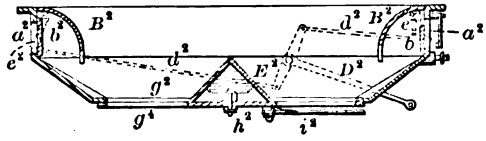

89262—A. R. Fuller—*Sad Iron Cleaner.*

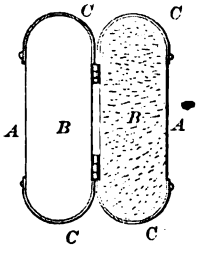

89259—D. Wiggins—*Ice Cream Freezer.*

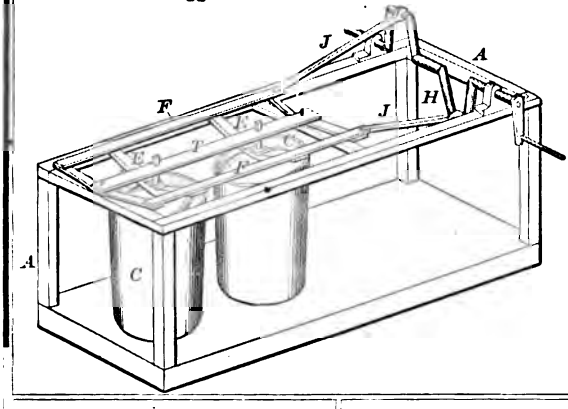

89263—J Lyon—*For Cleaning Bricks.*

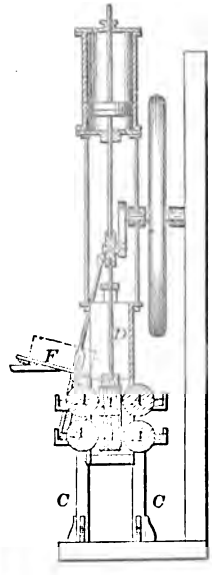

89264—E. G. Lamson—*Rock Channeling Machine.*

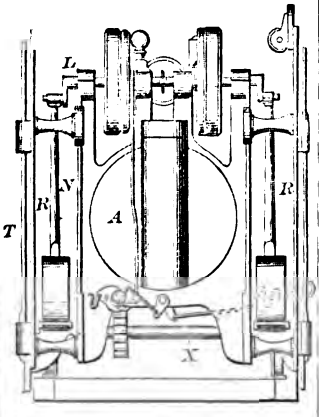

89267—Adair & Pool—*For Cutting Bolts.*

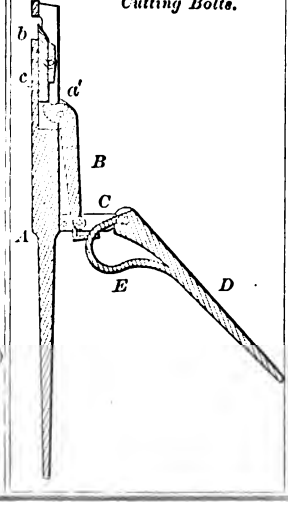

89277—H. Bickford—*Blind Slat Tenoning Machine.*

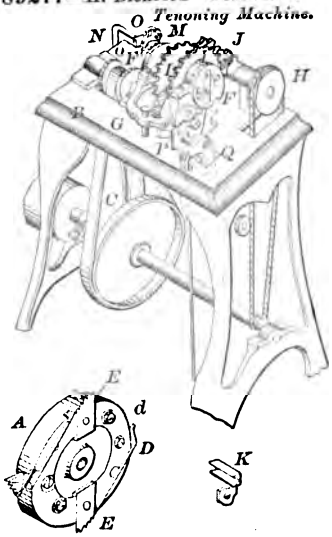

89278—J. E. Blodgett—*Stove Cover Holder.*

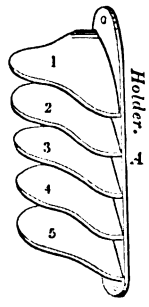

89280—R. Blum—*Stove Governor.*

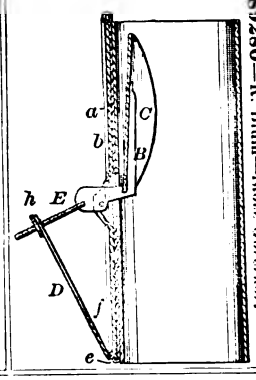

89281—D. Bordner—*Fence Board Gauge Holder.*

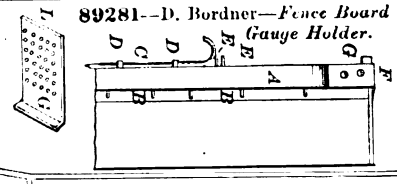

89282—J. F. Brewer—*Chain.*

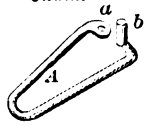

89283—K. Brown—*Nut Lock.*

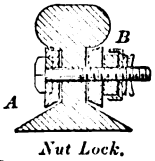

89287—W. H. Bustin—*Hames.*

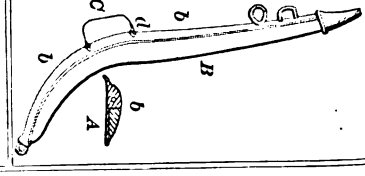

89284—S. Brown—*Elevator Gate.*

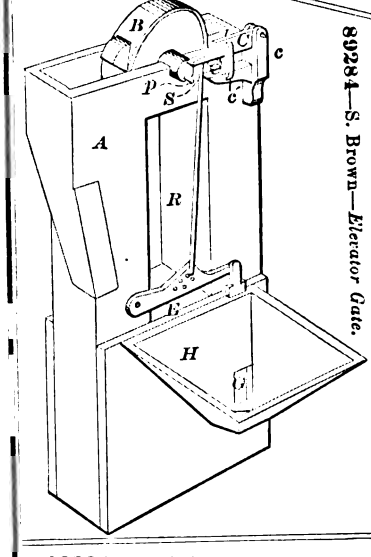

89286—I. N. Buck—*Burglar Alarm.*

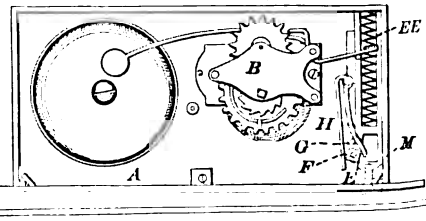

89288—W. H. Bustin—*Hames.*

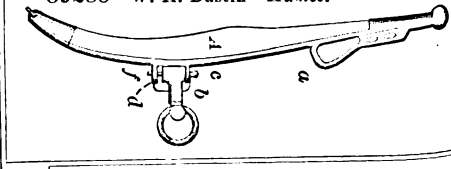

89290—C. Chabot—*Spinning Machine.*

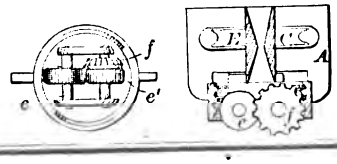

89291—J. C. Cochrane—*Steam Generator.*

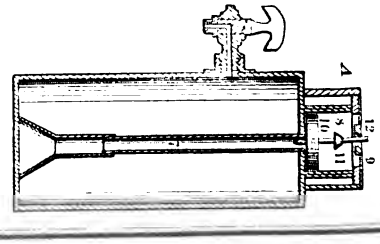

89269—M. L. Andrew—*Pump.*

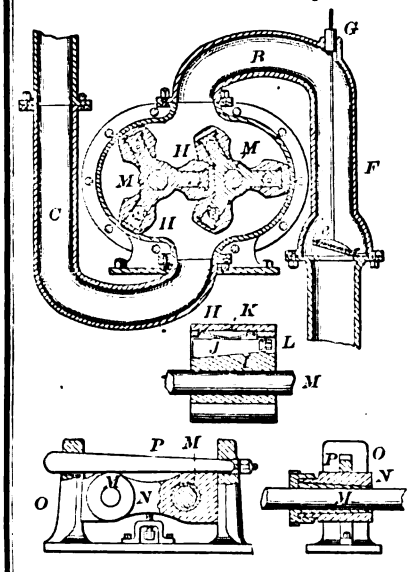

89272—R. R. Ball—*Sash Lock.*

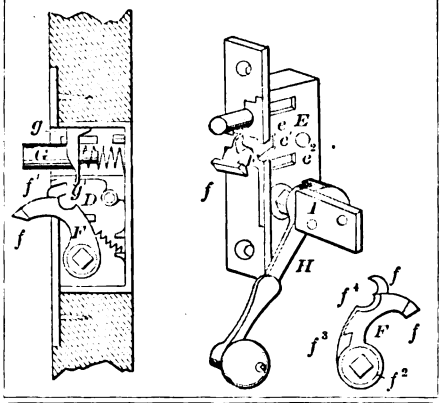

89271—S. D. Baldwin—*Vapor Burner.*

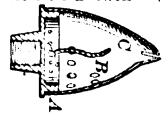

89270—G. Anton—*Candle and Ornament Holder.*

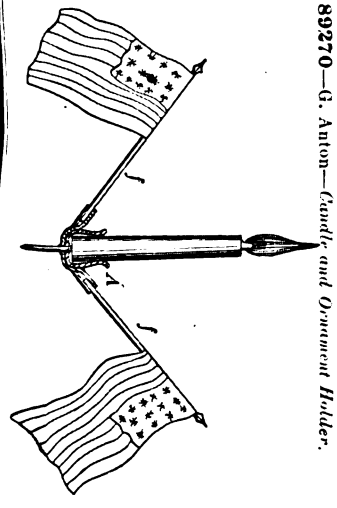

89275—E. E. Bean—*For Sewing Leather.*

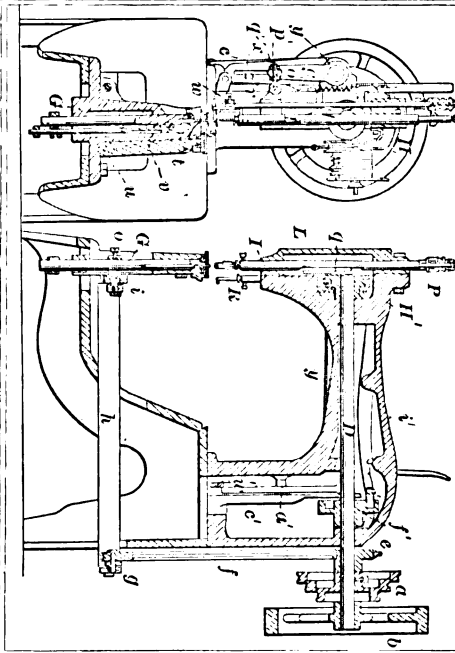

89276—W. Beers—*Carriage Seat Fastening.*

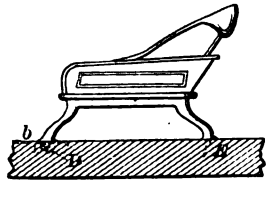

89273—R. R. Ball—*Sash Lock.*

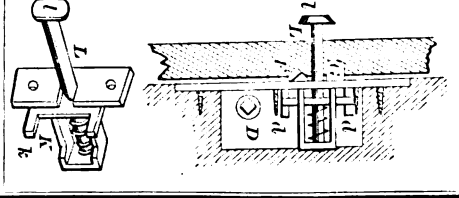

89297—C. M. Dillon—*Swing.*

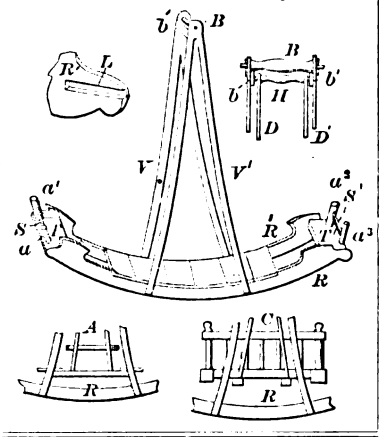

89299—W. A. Fenn—*Oil Can.*

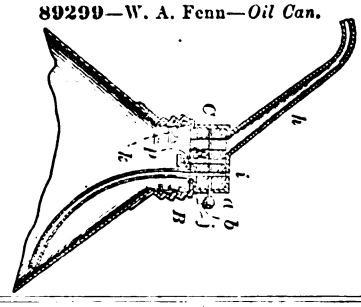

89302—T. J. Flagg—*Suspender End.*

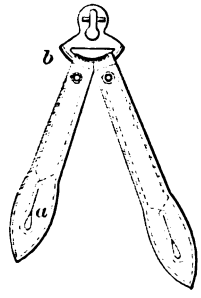

89307—W. D. Gridley—*Book Holder.*

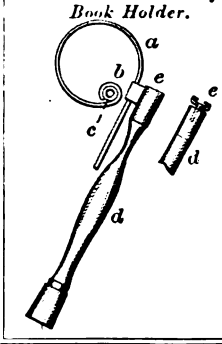

89300—W. A. Fenn—*Trap.*

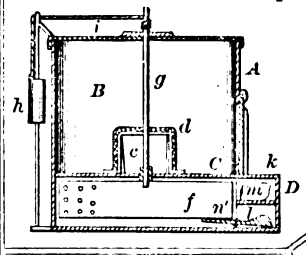

89303—I. Forman—*Cultivary Steamer.*

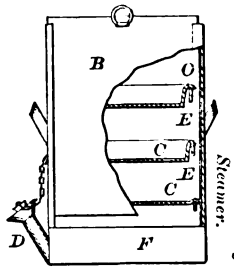

89301—B. F. Fisk—*Gate.*

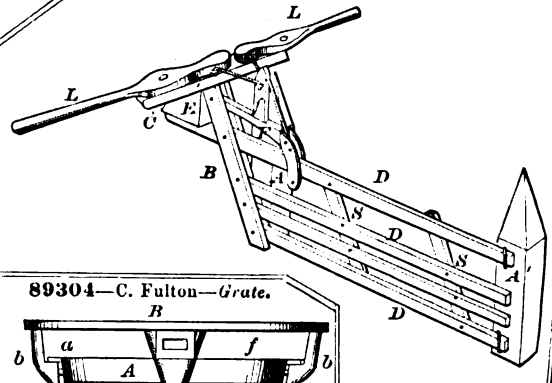

89304—C. Fulton—*Grate.*

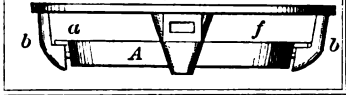

89305—B. Glasscock—*Trap.*

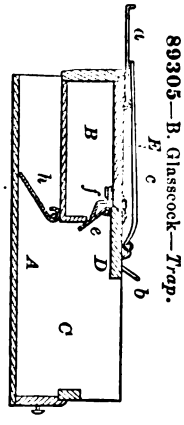

89306—J. Goodher—*Trestle.*

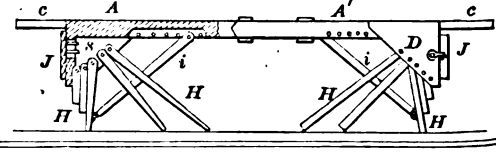

89308—T. Hall—*Railroad Signal.*

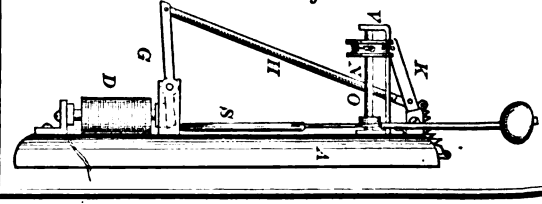

89309—G. Hancline—*Torch.*

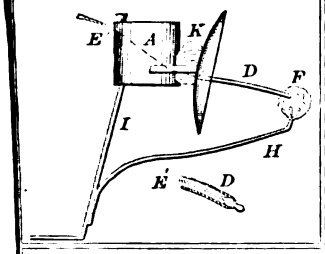

89310—J. Heatley—*Furnace.*

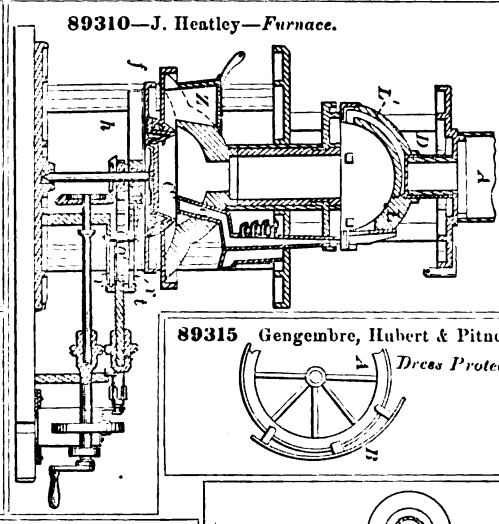

89316—G. H. Hurd—*Dental Cup and Suction Mould.*

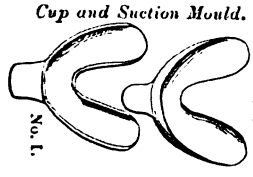

89315 Gengembre, Hubert & Pitney—*Dress Protector.*

89318—C. B. Jarvis—*For Distilling Spirits.*

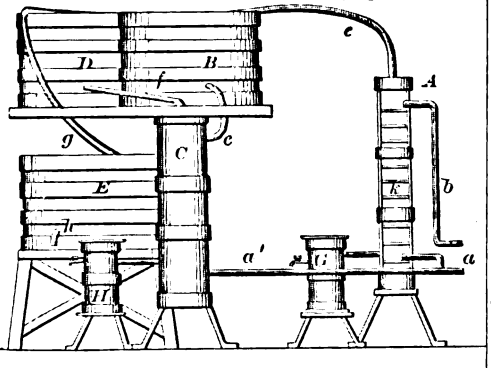

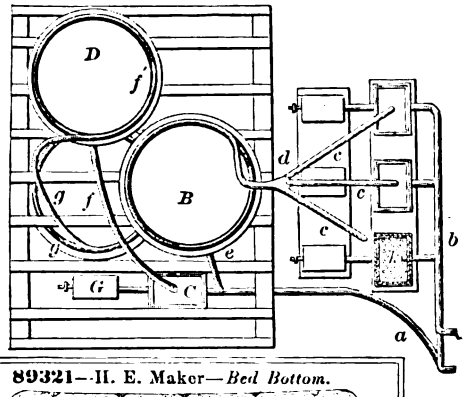

89313—C. E. L. Holmes—*For Scouring and Drying Sheet Metal.*

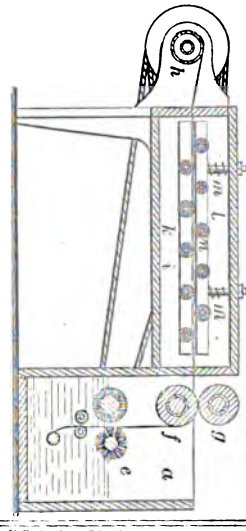

89317—H. Hursh, Sr.—*Chair.*

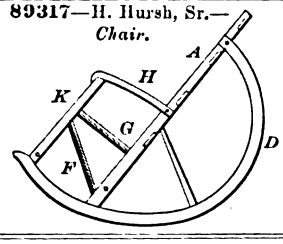

89321—H. E. Maker—*Bed Bottom.*

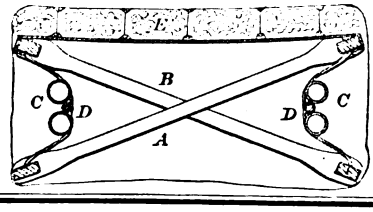

89322—J. Maris—*Hub and Spoke.*

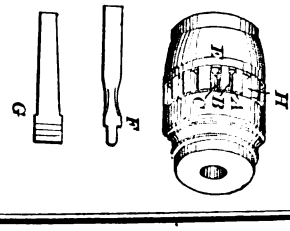

89319—Laramie & Scott—*For Wrapping Sugar Kisses.*

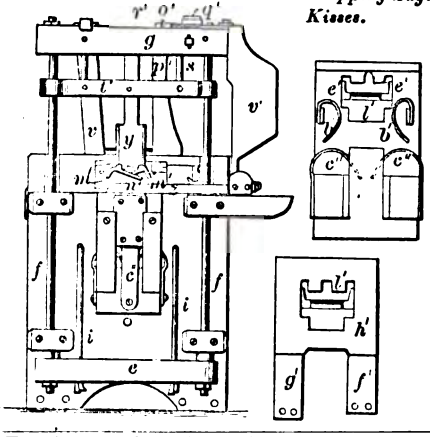

89323—T. F. Mayhew—*Oyster Dredge.*

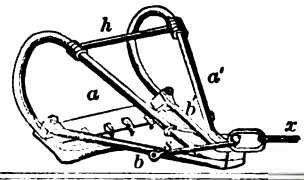

89325—McMullin & I. N. & M. Mendenhall—*Wash Boiler.*

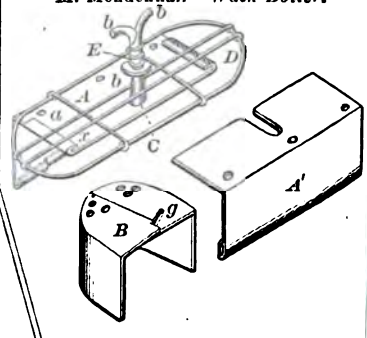

89324—McCormick, Baker & Erpelding—*Harvester.*

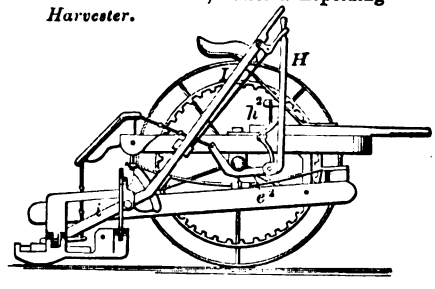

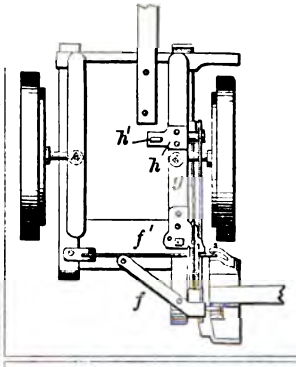

89327—H. Mitchell—*Fruit Can.*

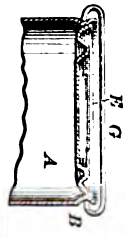

89328—C. S. Moseley—*Watch.*

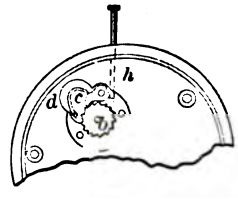

89332—A. Olmsted—*Log Boat.*

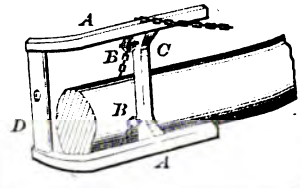

89326—H. Merrie—*For Making Tin-Lined Lead Pipe.*

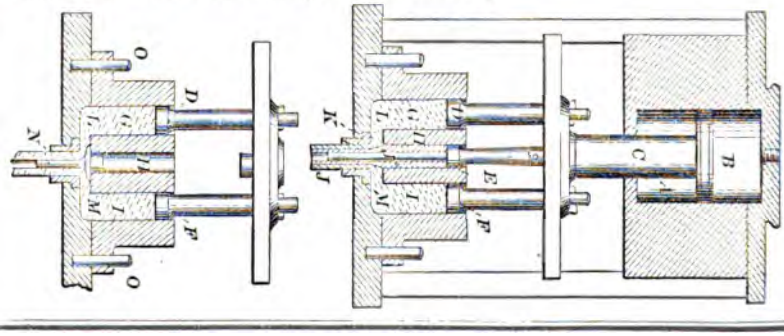

89309—G. Haneline—*Torch.*

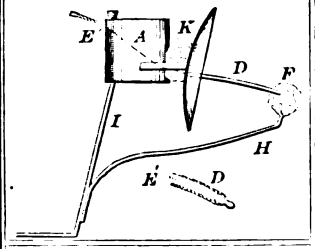

89310—J. Heatley—*Furnace.*

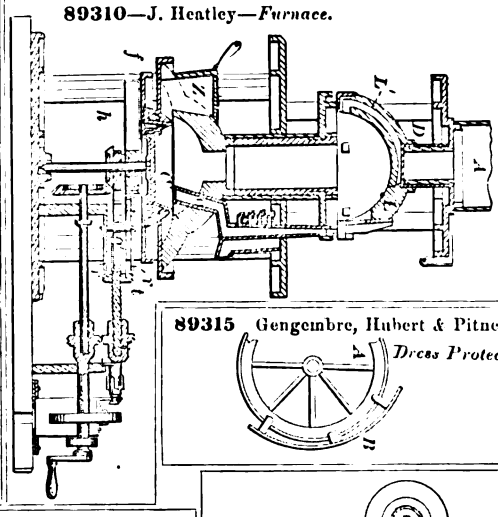

89316—G. H. Hurd—*Dental Cup and Suction Mould.*

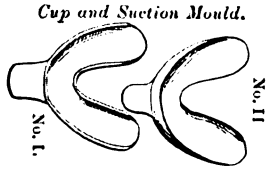

89315 Gengembre, Hubert & Pitney—*Dress Protector.*

89318—C. B. Jarvis—*For Distilling Spirits.*

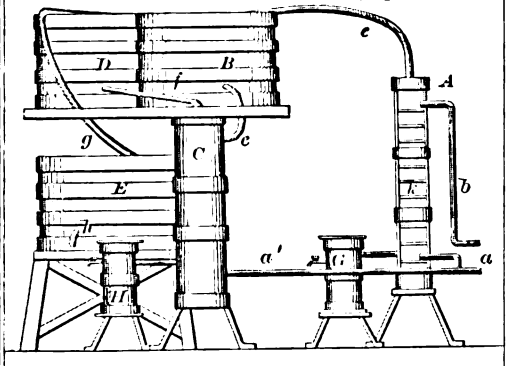

89313—C. E. L. Holmes—*For Scouring and Drying Sheet Metal.*

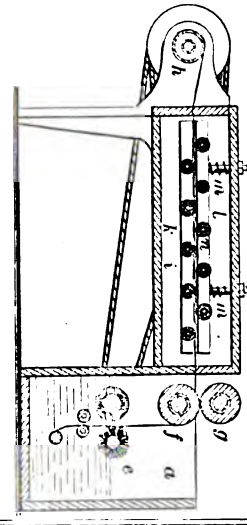

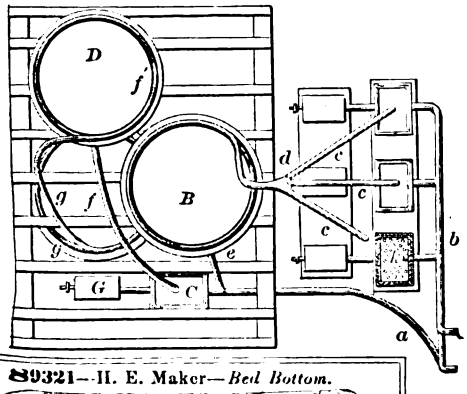

89317—H. Hursh, Sr.—*Chair.*

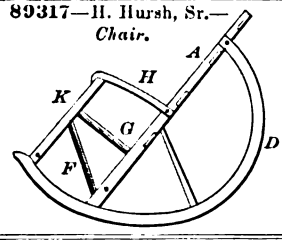

89321—H. E. Maker—*Bed Bottom.*

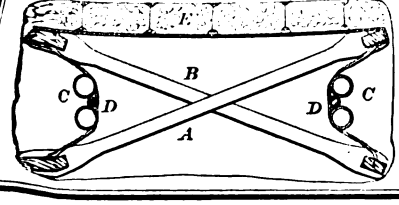

89322—J. Maris—*Hub and Spoke.*

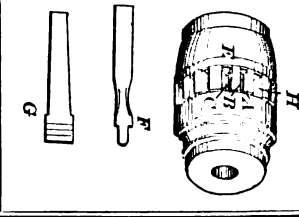

89334—Parmater & Bowen—*Grain Separator.*

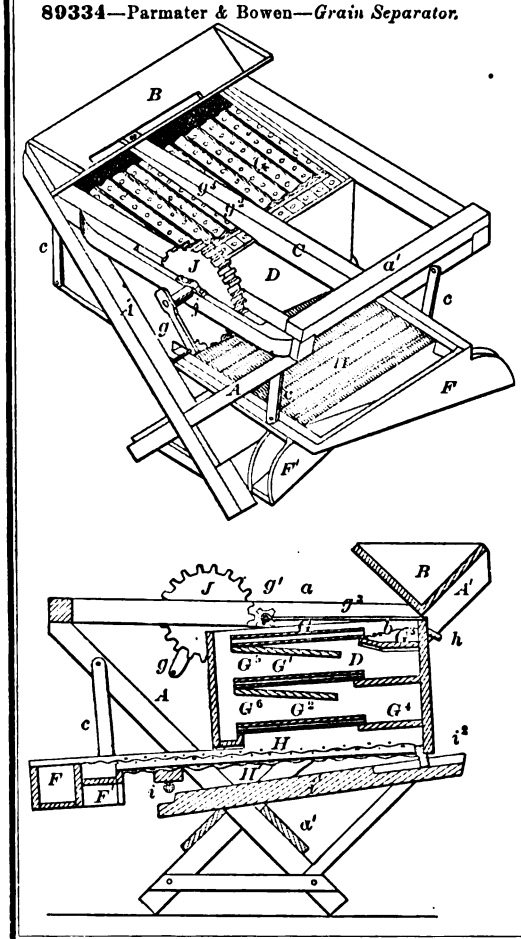

89338—Pomroy & Walter—*Pump.*

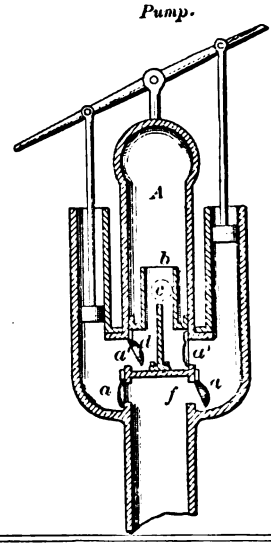

89339—Porter, Leach & Hutchins—*Chain Plate Attachment.*

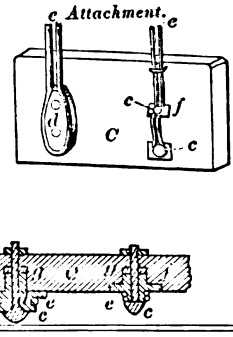

89340—A. J. Pyle—*Stove.*

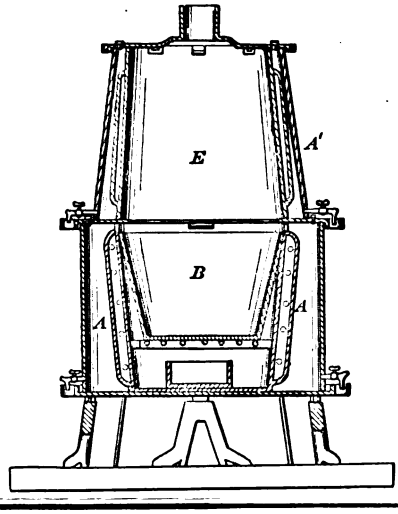

89341—J. Rankin—*Velocipede.*

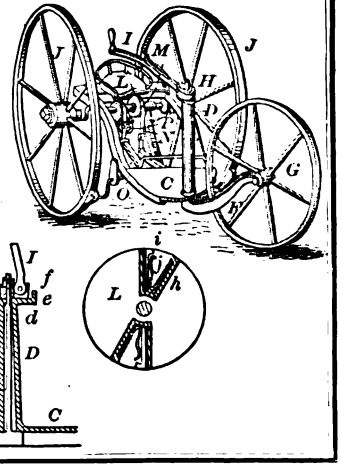

89342—D. W. S. Rawson—*Photographic Apparatus.*

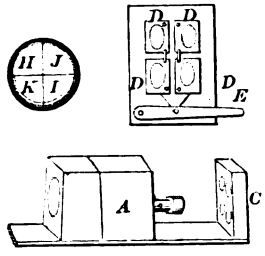

89343—H. Rees—*Horse Rake.*

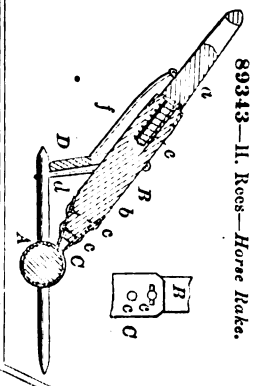

89345—L. S. Robbins—*Preserving Telegraph Poles.*

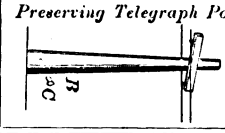

89349—H. B. Rowley—*Journal Box.*

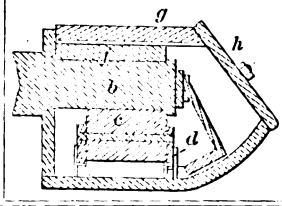

89344—A. K. Rider—*Pump Valve.*

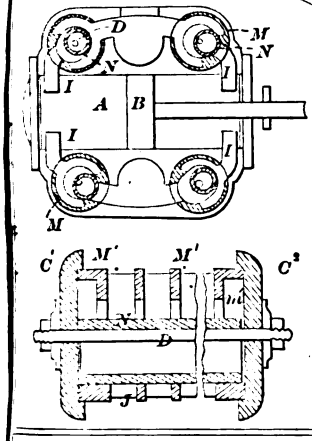

89347—F. H. Root—*Stove Grate.*

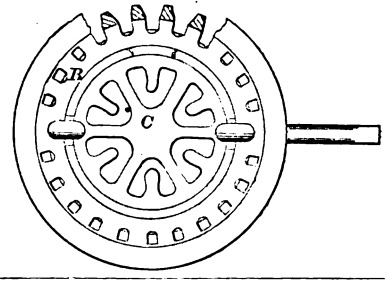

89346—W. A. Robinson—*Horse Collar Fastener.*

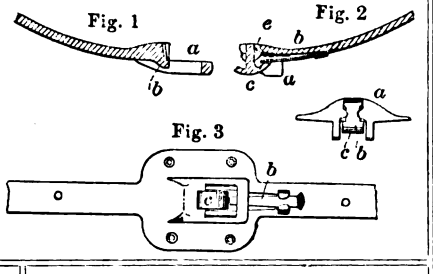

89351—E. M. Sealand—*Roller.*

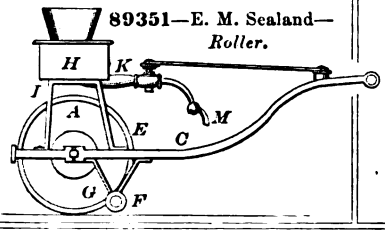

89348—C. E. Roper—*Harvester Pitman.*

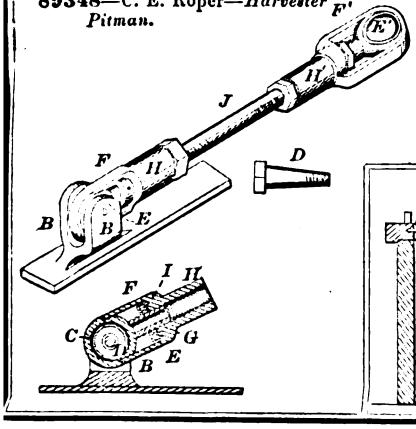

89352—T. Silliman—*Trap.*

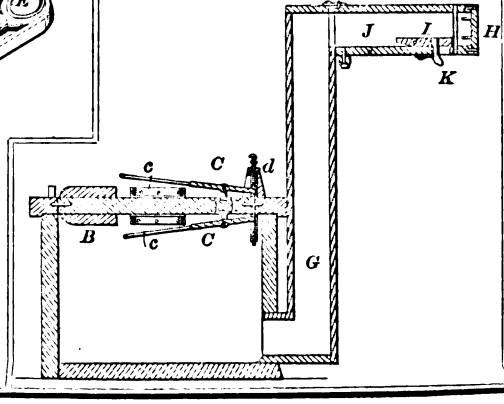

89350—J. R. Rude—*Seeding Machine.*

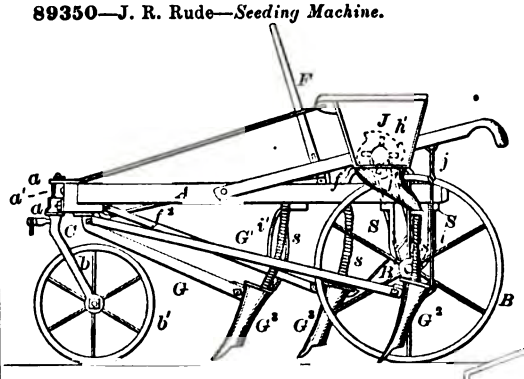

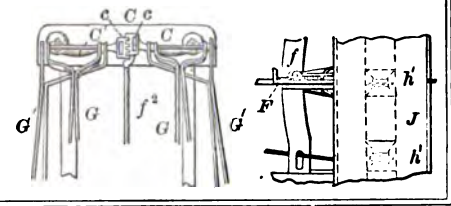

89355—Sturges & Young—*Car Coupling.*

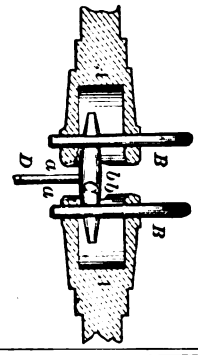

89353—T. R. Sinclaire—*For Purifying and Rectifying Liquids.*

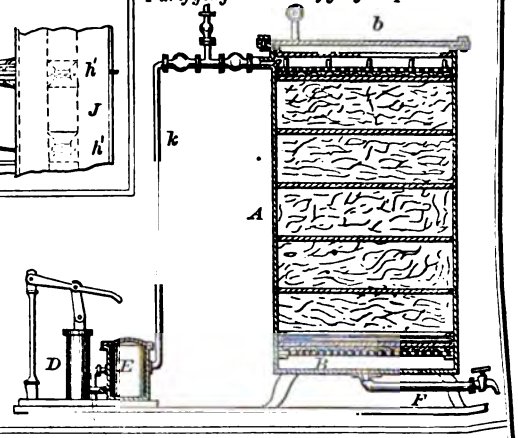

89354—Spencer & Cutting—*Pen Holder.*

89356—G. A. Sturges—*Sash Holder.*

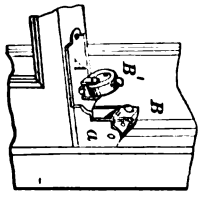

89357—H. L. Swartwout—*Sewing Machine.*

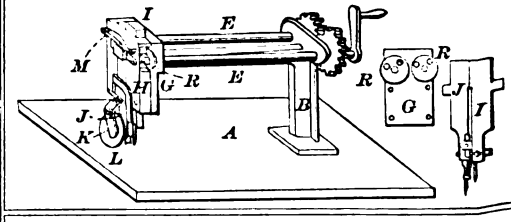

89358—Tirrell & Whitney—*Paper File.*

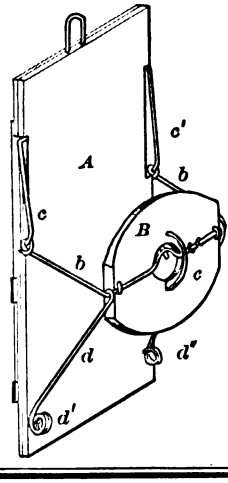

89359—R. C. Tomb—*Quilting Frame.*

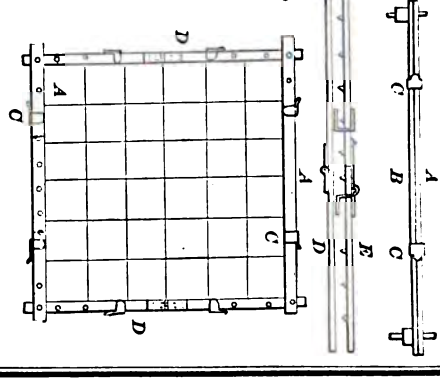

89360—J. & W. Toothill—*Ornamenting Sheet Metal Ware.*

89367—C. H. Wolcott—*Lamp Chimney.*

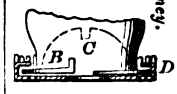

89363—A. Warren—*Water Wheel.*

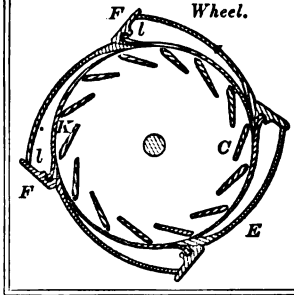

89361—Townley & Friedrich—*Plow.*

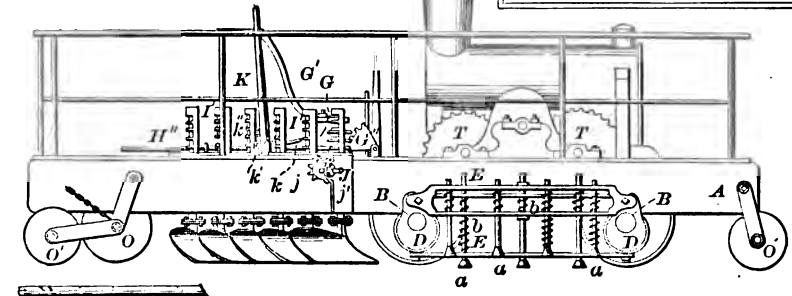

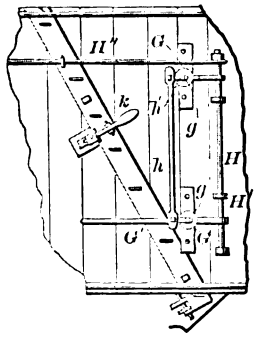

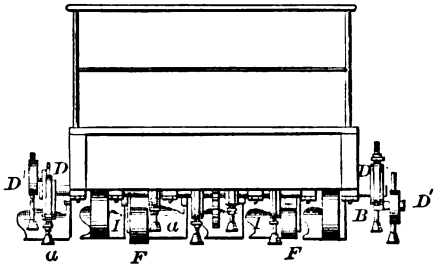

89362—H. Tyler—*Sprinkler.*

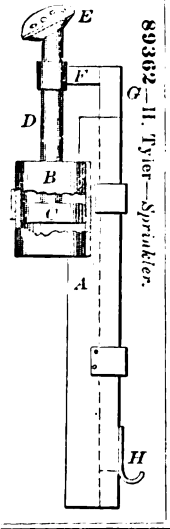

89364—H. Wendt—*Shears and Scissors.*

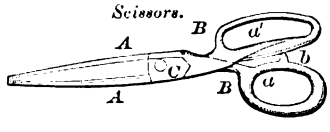

89366—D. Wineland—*Feed Water Heater.*

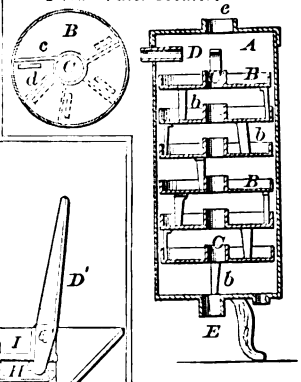

89365—J. F. Wicks—*Loom.*

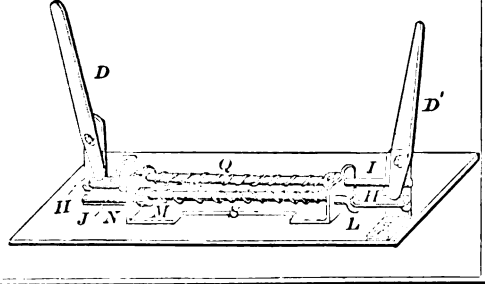

89368—D. Woodbury—*Horse Power.*

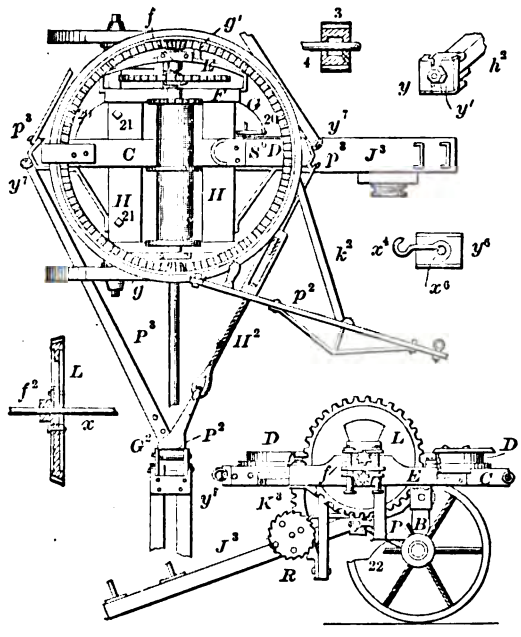

89369—S. W. Woodward—*Plane.*

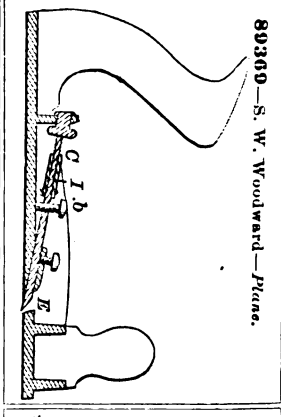

89372—A. Zwiebel—*Hand Cutter.*

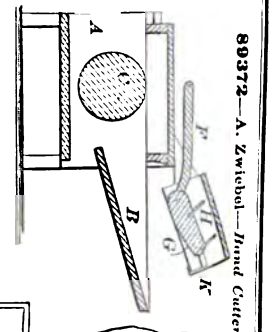

89371—R. Wright—*Spark Conductor.*

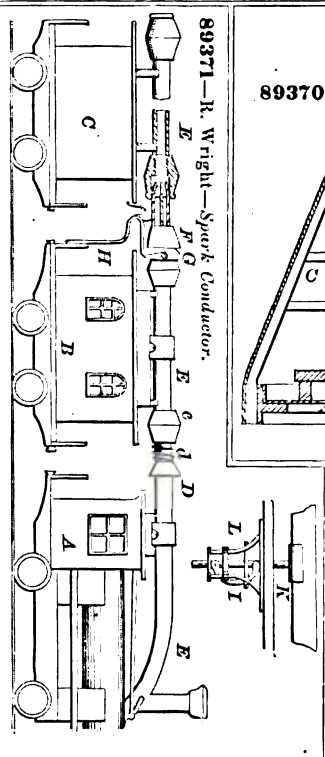

89370—J. R. Worster—*Bath.*

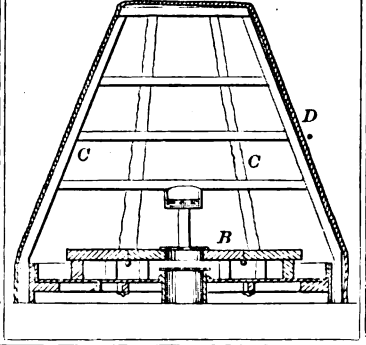

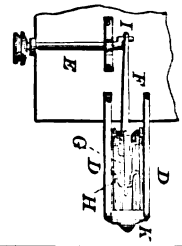

89373—L. Abbott—*Pipe Coupling.*

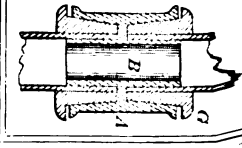

89374—M. J. Allen—*Coil for Mash Tubs.*

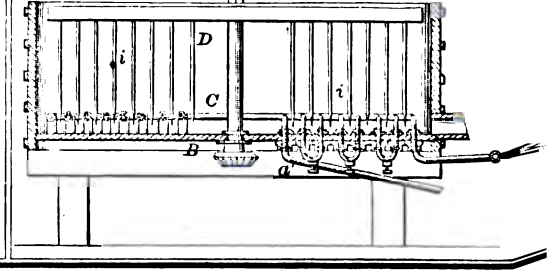

89360—J. & W. Toothill—*Ornamenting Sheet Metal Ware.*

89367—C. H. Wolcott—*Lamp Chimney.*

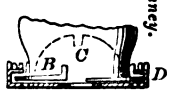

89363—A. Warren—*Water Wheel.*

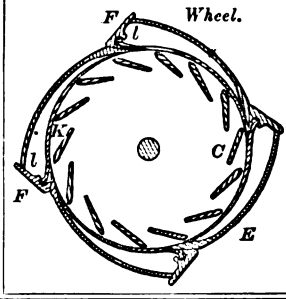

89361—Townley & Friedrich—*Plow.*

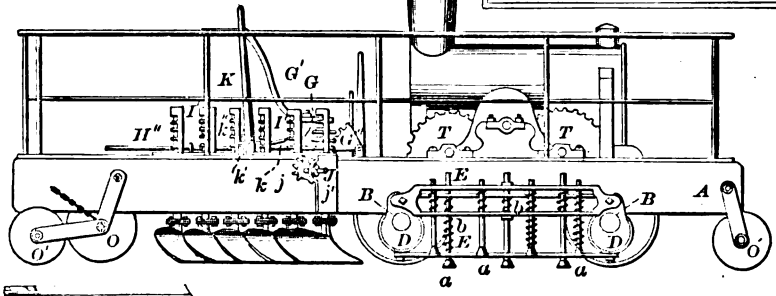

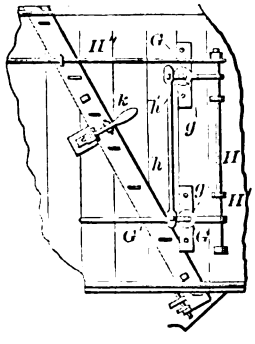

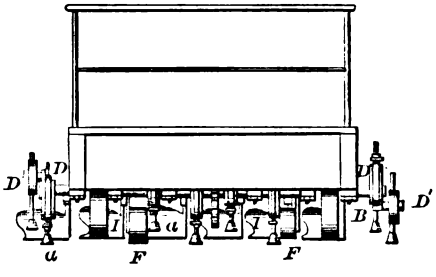

89362—H. Tyler—*Sprinkler.*

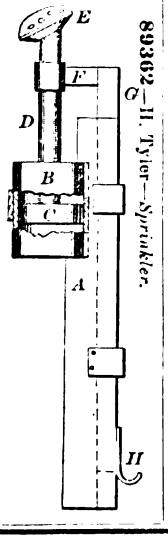

89364—H. Wendt—*Shears and Scissors.*

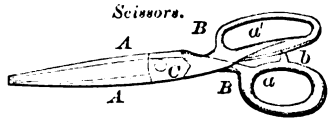

89366—D. Wineland—*Feed Water Heater.*

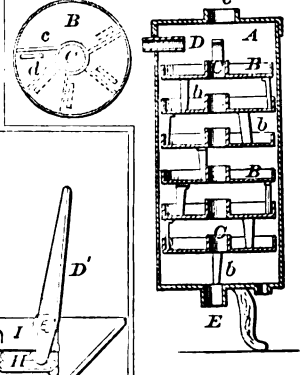

89365—J. F. Wicks—*Loom.*

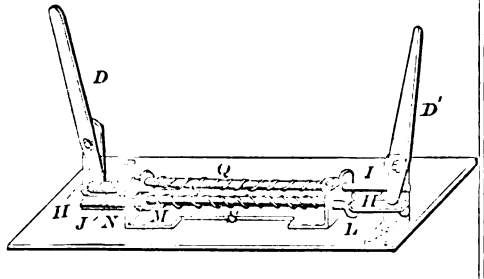

89384—A. Cook—*For Stauging and Welding Toe Calks to Horse Shoes.*

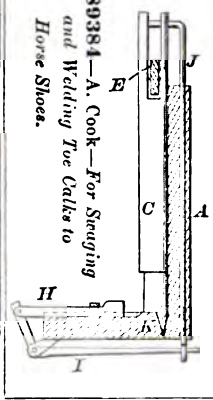

89385—A. Day—*Wash Boiler*

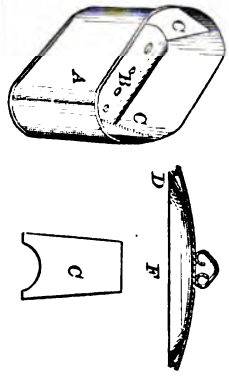

89387—De Lyon & Werner—*Wood Bending Machine.*

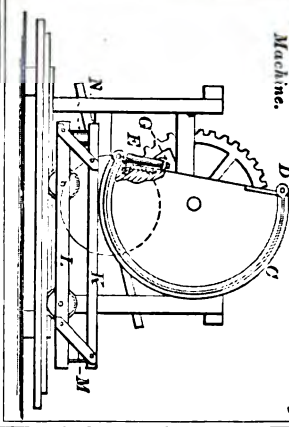

89386—Dean & Baker—*Grain Drill.*

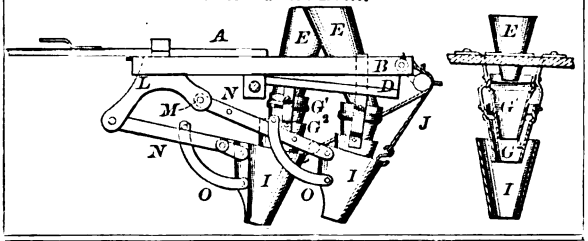

89388—W. Denton—*Hay Loader.*

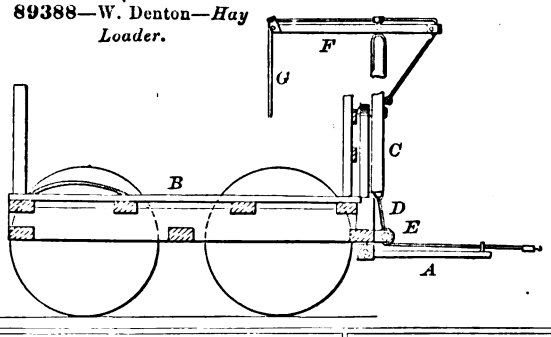

89389—E. Douty—*Straw Cutter.*

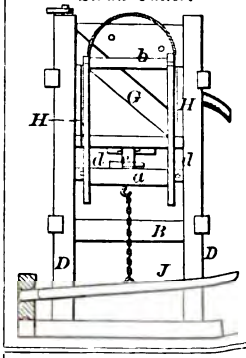

89392—S. J. Dwyer—*Milk Can.*

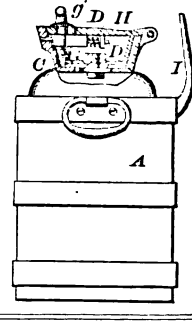

89390—F. S. Dumont—*For Compressing Air.*

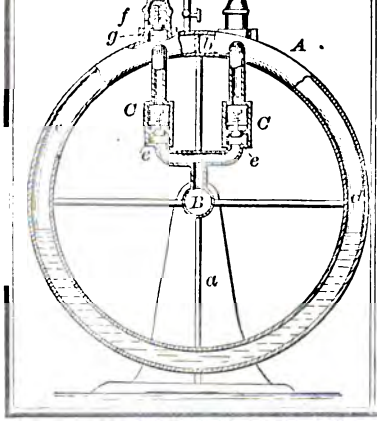

89391—W. C. Durant—*Stove.*

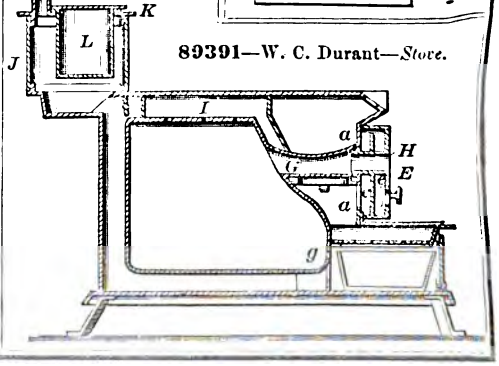

89375—C. H Anders—*Sash Blind.*

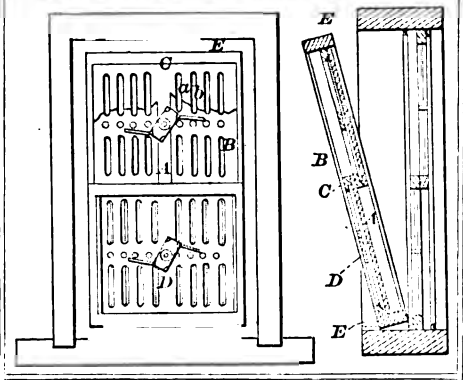

89376—J. Anderson—*Seeder, Harrow and Roller.*

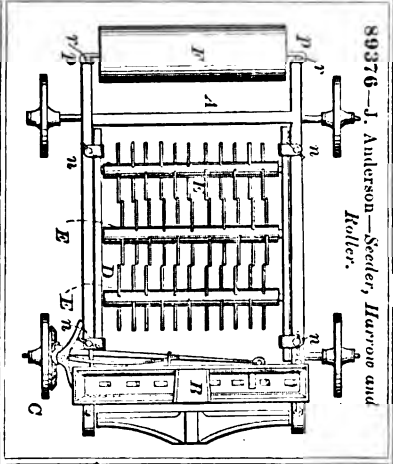

89377—J. M. Austin—*Washing Machine.*

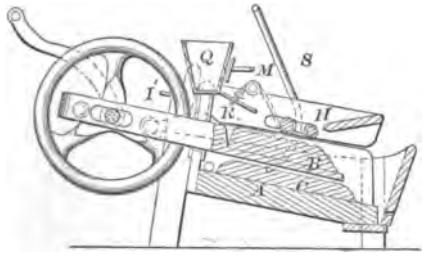

89378—S. Belden—*Pump.*

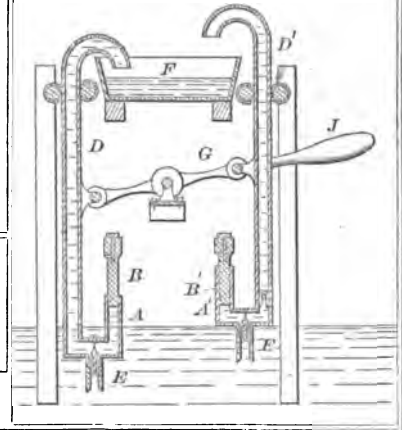

89381—C. W. Brewer—*Piano Bridge.*

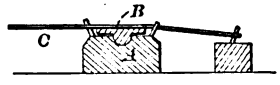

89382—S. Bruhl—*Neck Tie Supporter.*

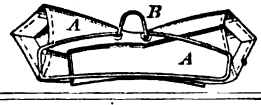

89380—W. J. Blackman—*Toy Gun.*

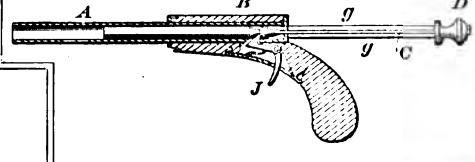

89383—J. D. Chambers—*For Displaying Dry Goods.*

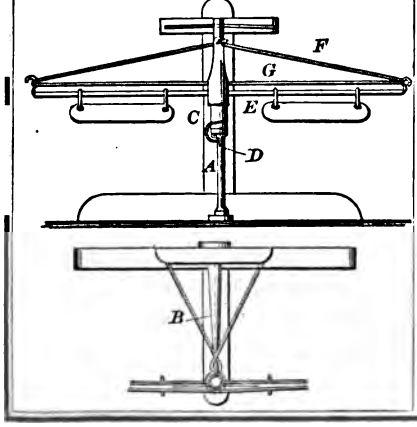

89379—S. S. Blackburn—*Rest for Shoeing Horses.*

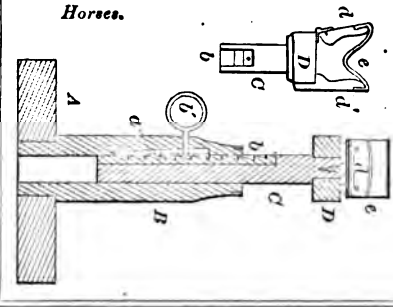

89401—D. Graves—*Washing Machine.*

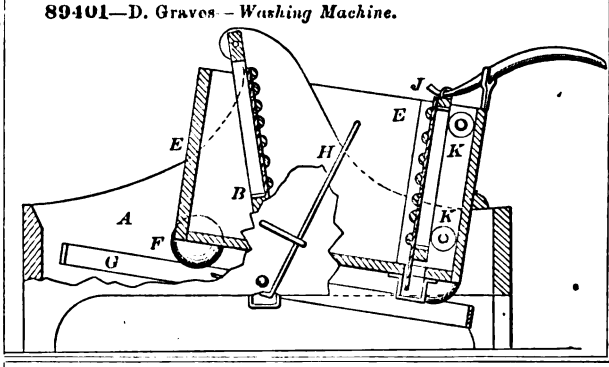

89407—G. W. Holton—*Clevis.*

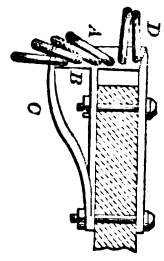

89405—H. R. Hildreth—*For Picking Hair Rope.*

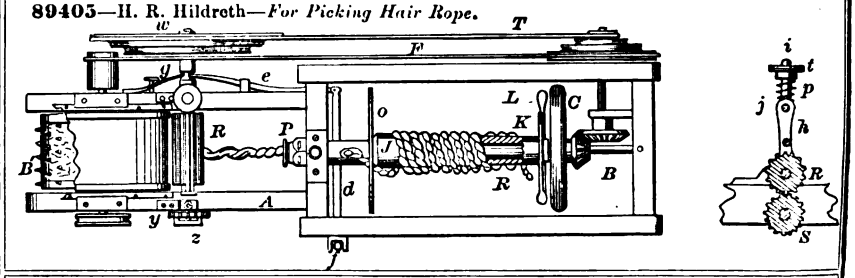

89404—W. W. Haupt—*Seed Planter.*

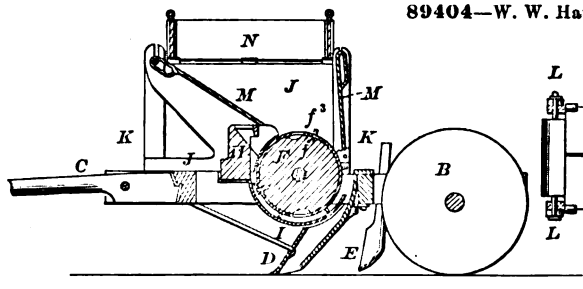

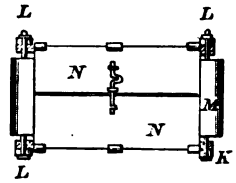

89406—N. Hinman—*For Fanning Mills.*

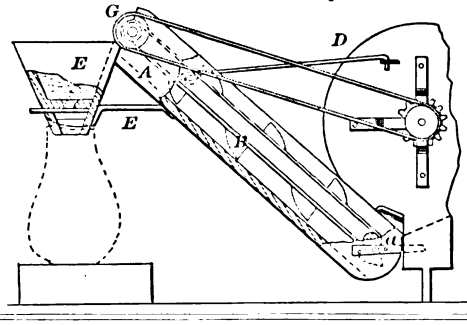

89408—W. A. Hough—*Billiard Register.*

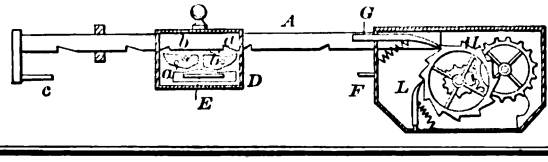

89409—B. S. Hyers—*Cultivator.*

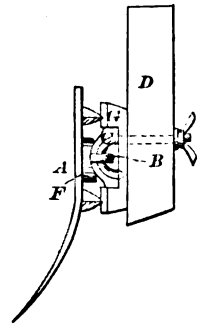

89393—J. J. Essex—*Syringe.*

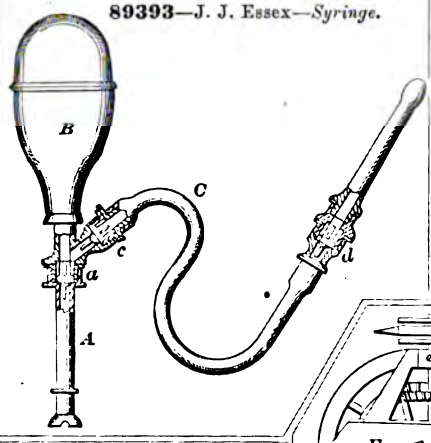

89394—A. Evans—*Gauge.*

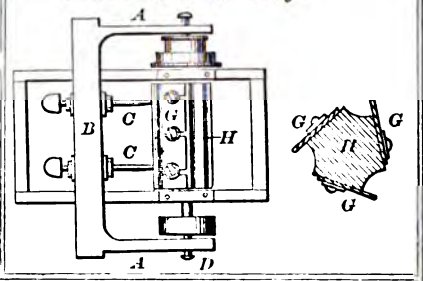

89396—A. W. Fleming—*Corn Harvester.*

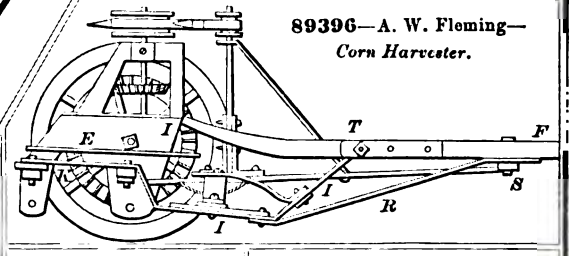

89398—W. W. Gilbert—*Pump.*

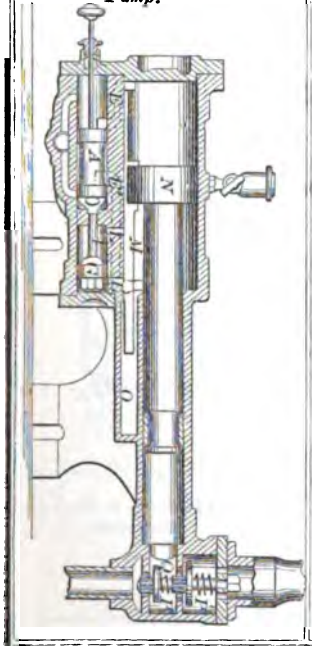

89399—W. W. Gilbert—*Valve.*

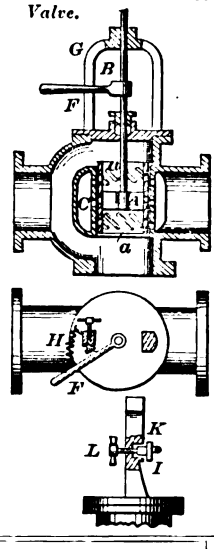

89397—T. F. Fouts—*Railroad Chair and Tie.*

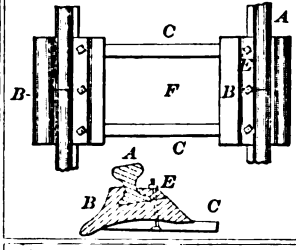

89402—A. Gregory—*Life Preserver.*

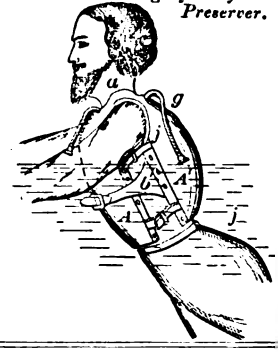

89400—J. Gill—*Bridge Beam and Girder.*

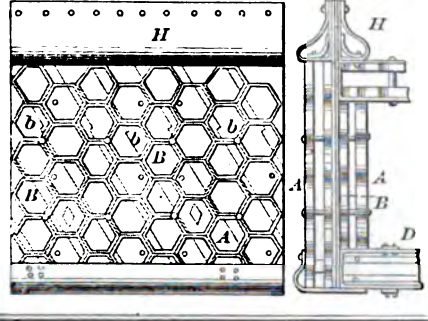

89403—J. Hall—*Stove Pipe.*

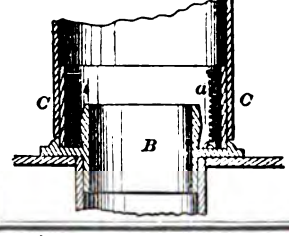

89414—I. Lancaster—*Harvester Rake.*

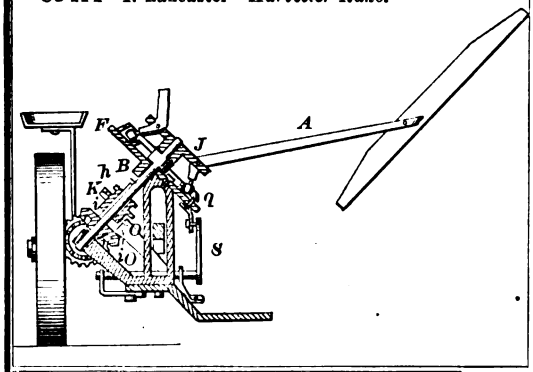

89415—W. W. Lowerree—*For Ruffling.*

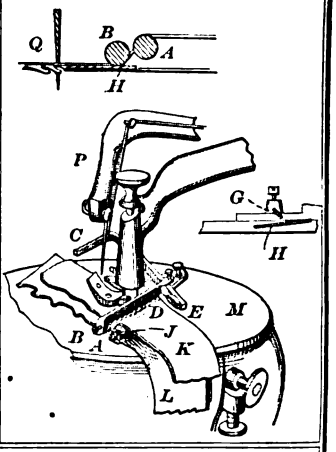

89416—N. Matlick—*Derrick.*

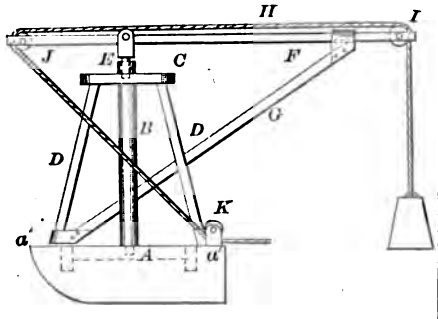

89417—T. J. McArthur—*Sewing Machine.*

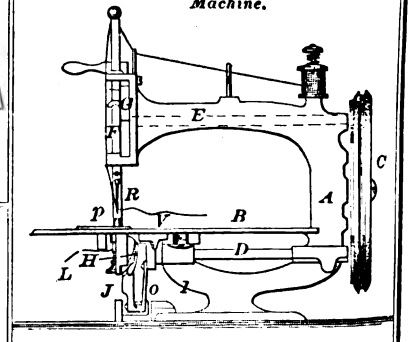

89418—W. C. McGill—*Caster.*

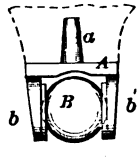

89419—L. McLellan—*Boiler.*

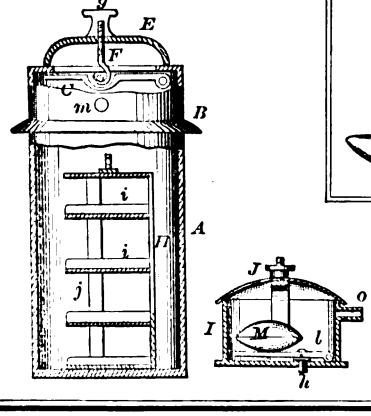

89421—T. H. Mead—*For Mitering Printers' Rules.*

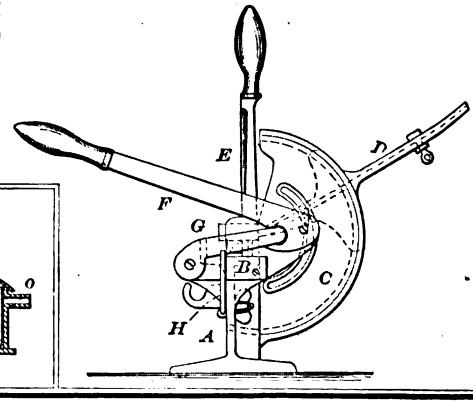

89420—J. & W. McNaught—*For Washing Wool.*

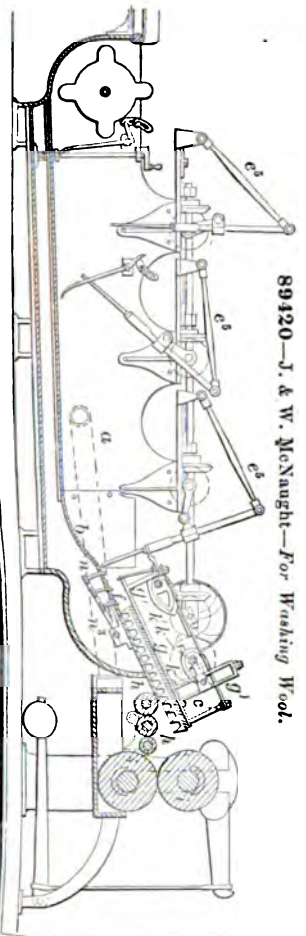

89422—J. Moody—*Cultivator.*

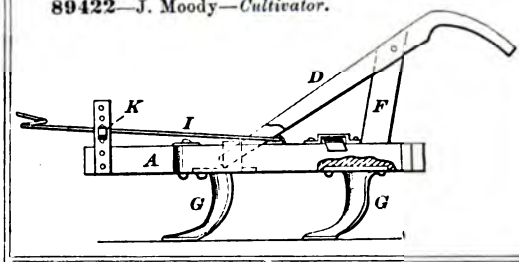

89423—C. T. Moore—*Crank.*

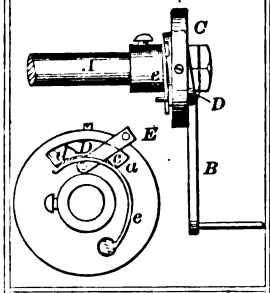

89424—J. T. Moxley—*Gate.*

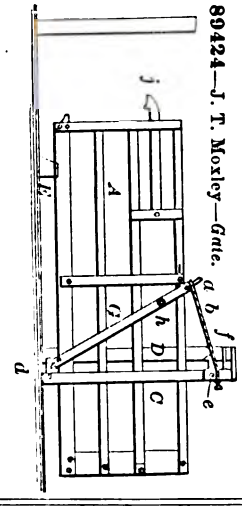

89425—J. Myers, Jr.—*Railroad Bar.*

89426—E. Norton—*Stove Pipe Blank.*

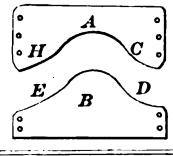

89428—W. Ord—*Piston.*

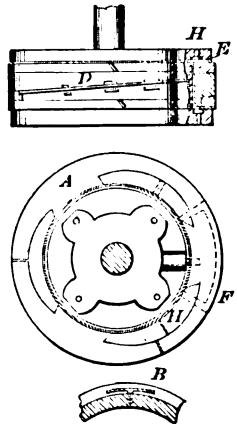

89429—D. J. Owen—*Trap.*

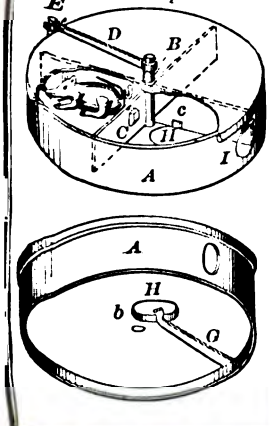

89427—J. Odell—*Quilting Frame.*

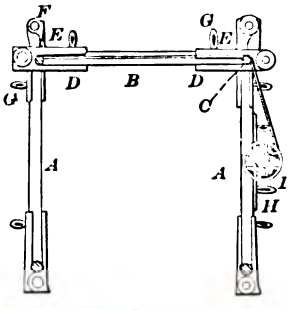

89431—Pratt & Seimel—*Soldering Apparatus.*

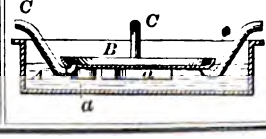

89432—J. B. Pullman—*Plow.*

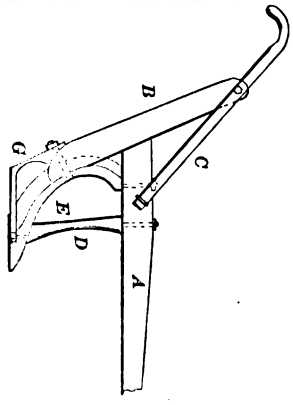

89434—J. Repetti—*Quartz Crusher.*

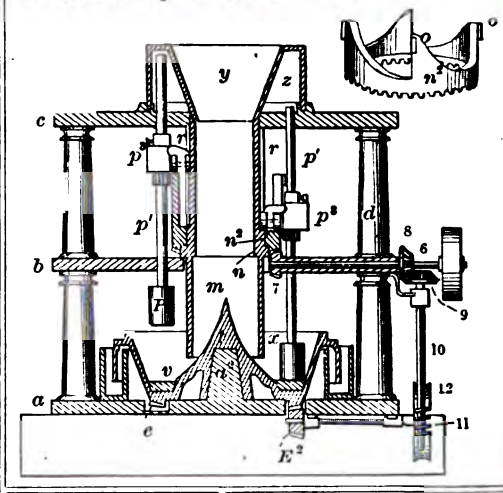

89433—B. F. Quimby—*For Making Paper Boxes.*

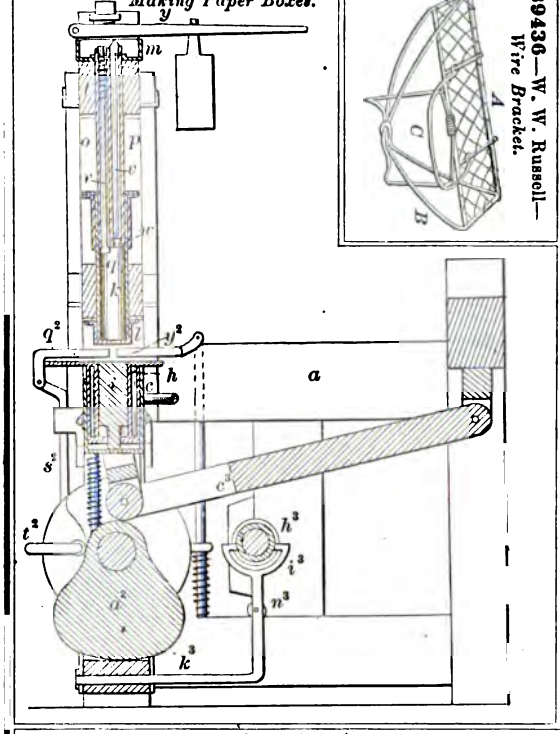

89436—W. W. Russell—*Wire Bracket.*

89437—L. Savage—*For Transferring Freight.*

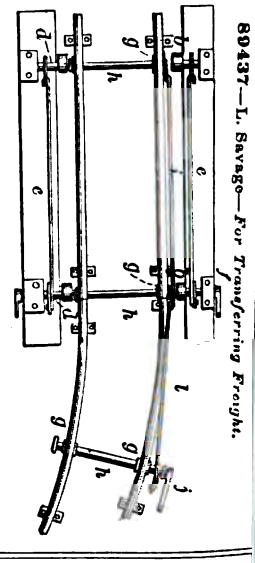

89438—W. Sellers—*Blind Slat Fastener.*

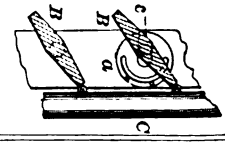

89435—P. Roberts—*Propelling Apparatus.*

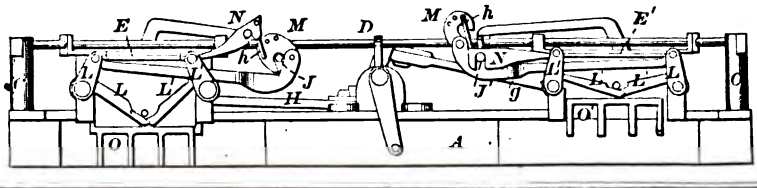

89440—D. Sherwood—*Dish Stand.*

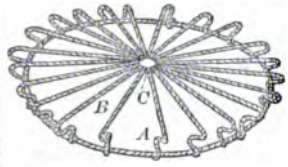

89442—F. H. Smith—*Bridge.*

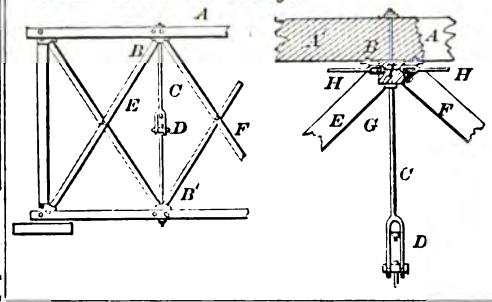

89441—C. W. Siemens—*Metallurgical Process and Furnace.*

Fig. 10

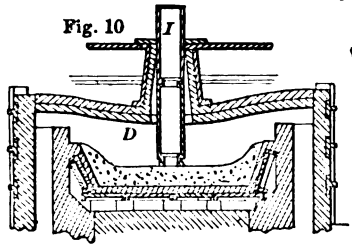

Fig. 11

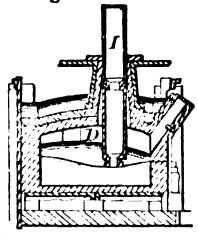

Fig. 1 and 2

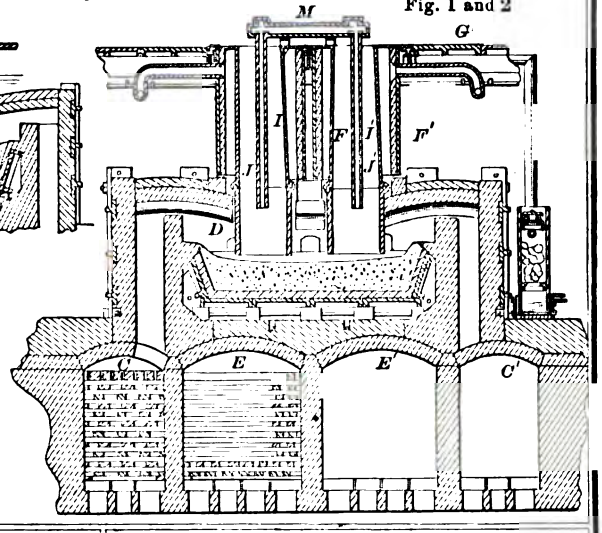

89444—J. G. Somes—*Coal Hod.*

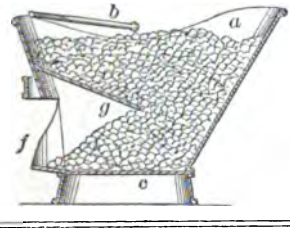

89443—W. H. Smith—*Velocipede.*

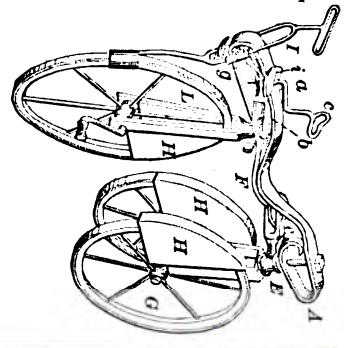

89445—J. Sparks—*Loom.*

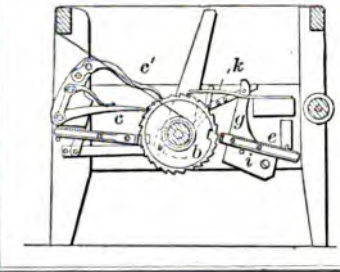

89446—J. Thomas—*For Embroidering.*

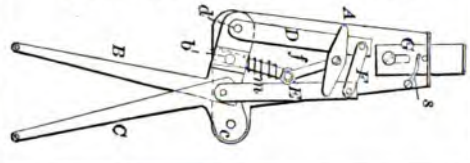

89447—J. A. Truitt—*Mail Bag Fastening.*

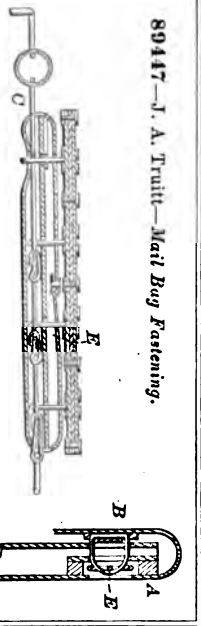

89448—S. D. Tucker—*For Grinding Saws.*

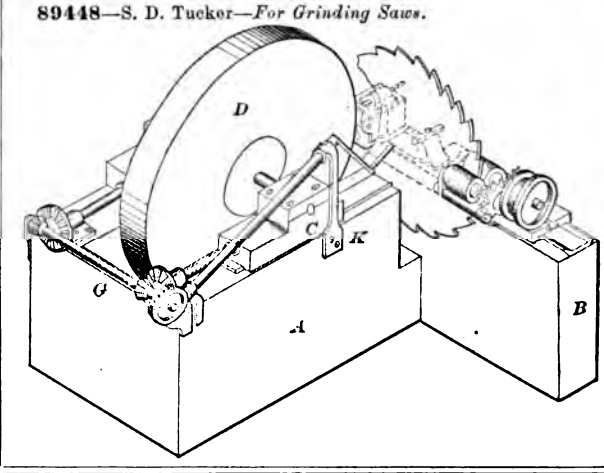

89450—W. W. Wade—*For Making Covered Buttons.*

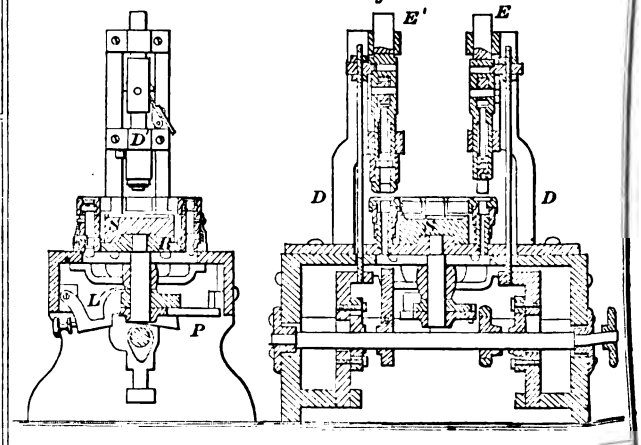

89451—A. Waldron—*Shoe Nail.*

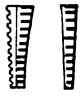

89449—J. R. Van Marter—*Still.*

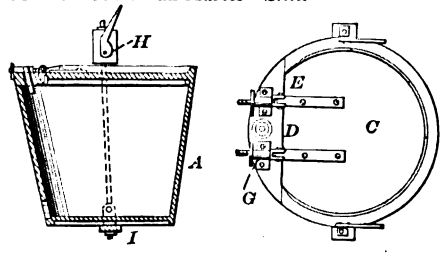

89452—L. Weed—*Ear Drop Suspender.*

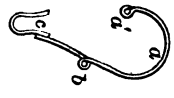

89454—F. Wittram—*Anchor.*

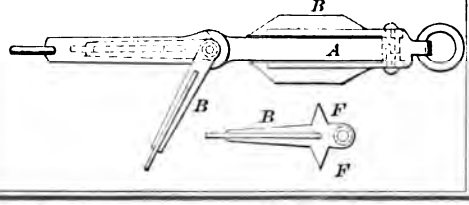

89455—A. F. Allen—*Hose Coupling.*

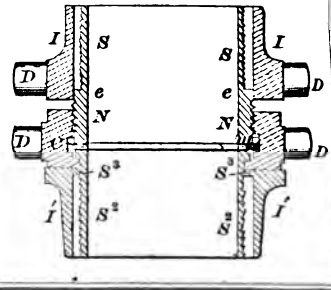

89453—J. A. Weisse—*Diving Bell.*

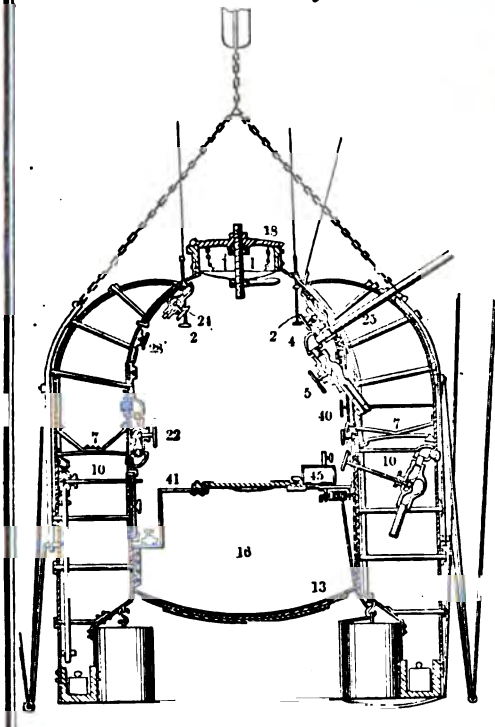

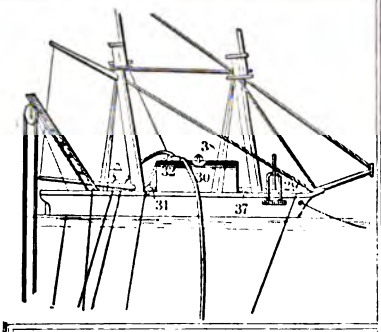

89457—A. M. Allen—*Reversing Gear.*

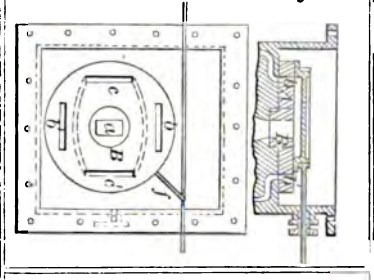

89460—W. E. Ball—*Nut Lock.*

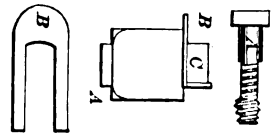

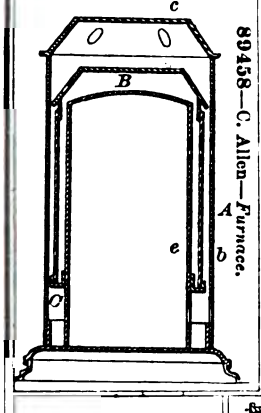

89458—C. Allen—*Furnace.*

89456—A. F. Allen—*Nozzle.*

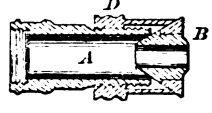

89459—C. L. W. Baker—*Brush.*

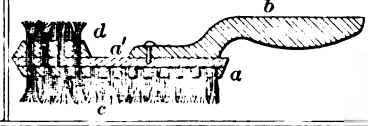

89462—H. A. Bowman—*Awning.*

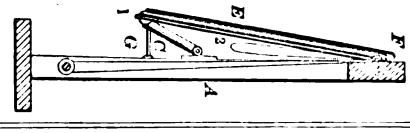

89463—T. Brockman—*Stove.*

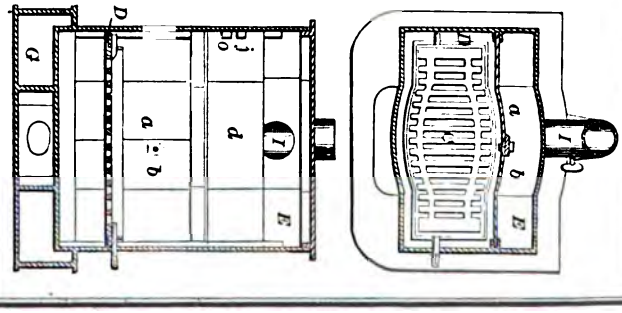

89461—G. W. Bishop—*Wrench.*

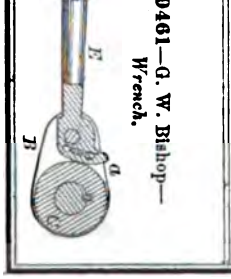

89464—M. Bush—*Hinge.*

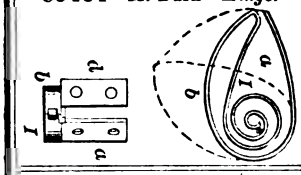

89465—Caldwell & Bugbee—*Whip Socket.*

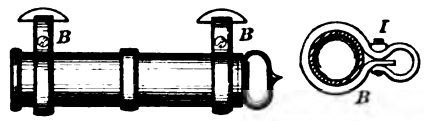

89466—W. D. Chase—*For Cutting and and Threading Pipes.*

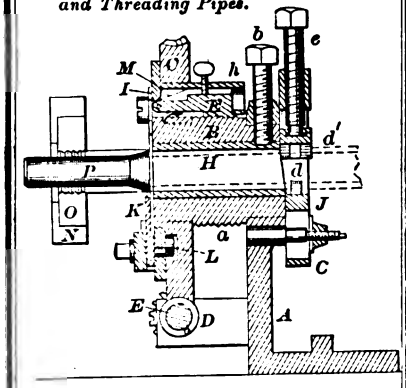

89467—F. O. Claflin—*Lasting Pincers and and Nailer.*

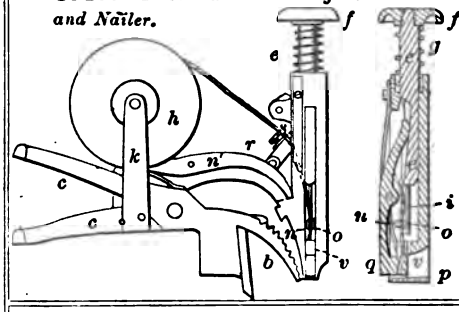

89468—A. B. Couch—*Lathe.*

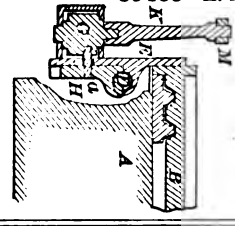

89469—Crawley & Baylies—*Vise.*

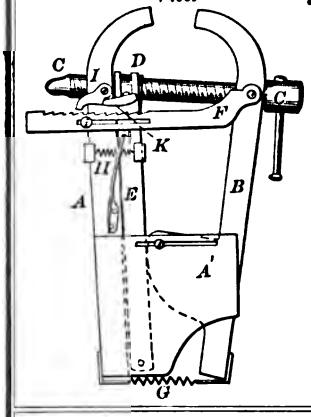

89470—J. C. & W. F. Currier—*Clod Fender.*

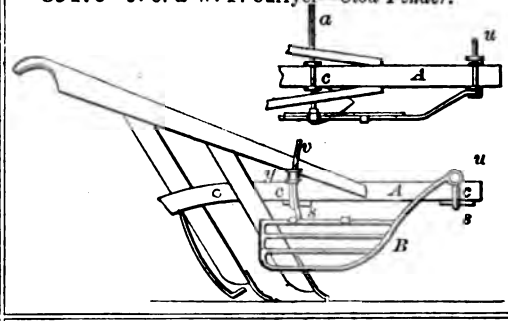

89471—C. Dawson—*Valve.*

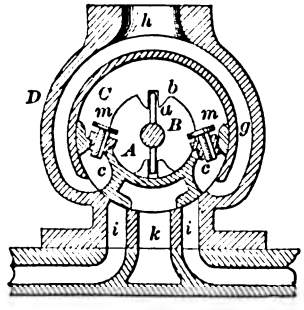

89472—F. De Bowens—*For Match Sticks.*

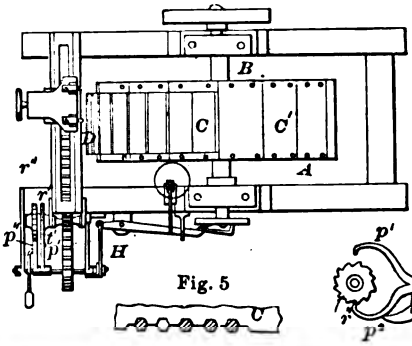

Fig. 5

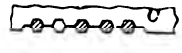

89473—T. R. Evans—*Shoe Tree.*

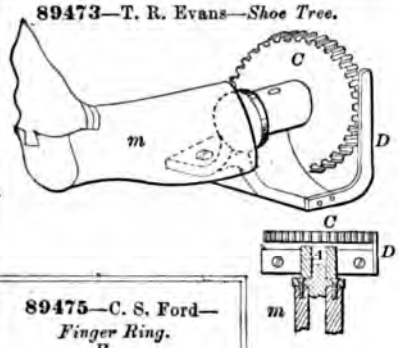

89474—D. Fitzgerald—*Safe.*

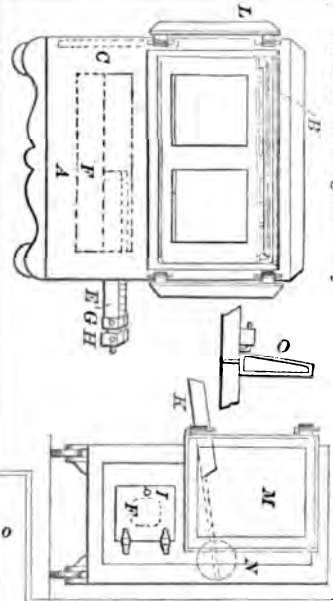

89475—C. S. Ford—*Finger Ring.*

89476—R. George—*For Concentrating and Separating Ores.*

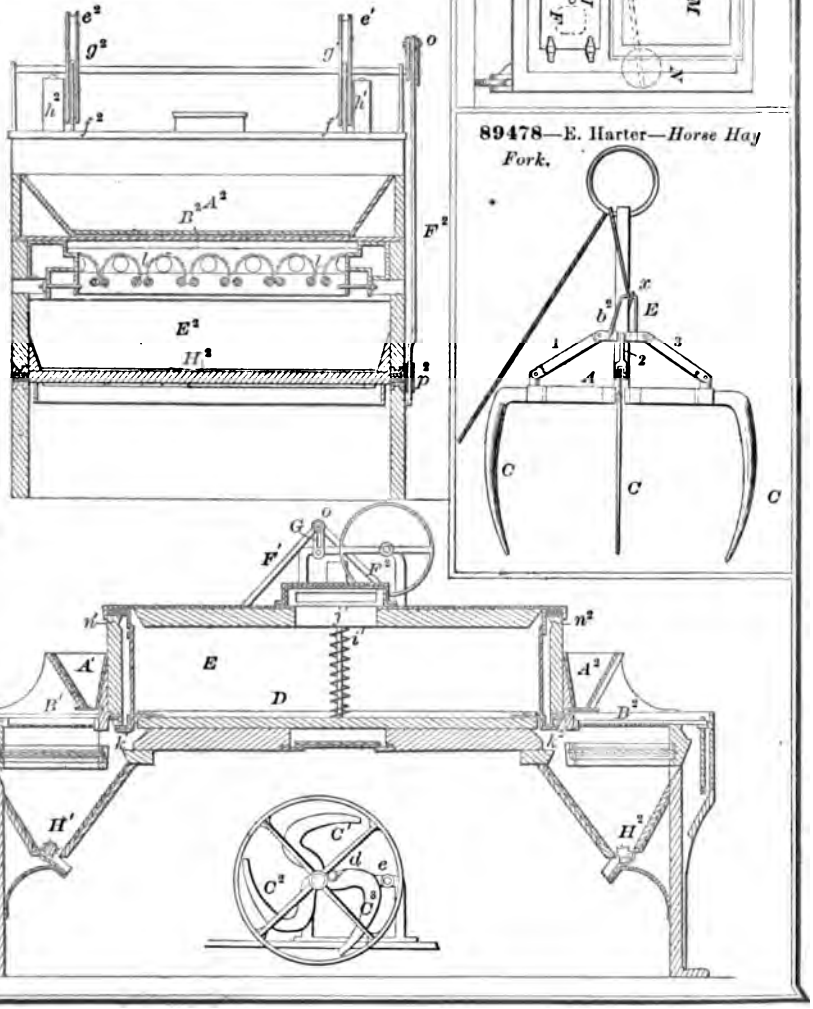

89478—E. Harter—*Horse Hay Fork.*

89477—G. L. Gibson, Jr.—*Cork Extractor.*

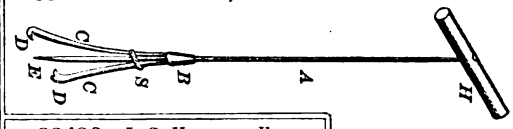

89479—J. Hayden, Jr.—*Water Closet.*

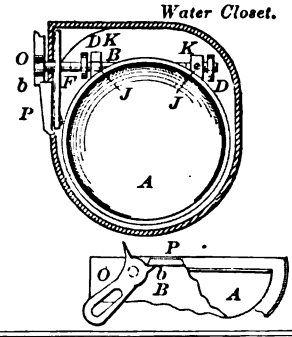

89480—J. C. Hervey—*For Moulding and Working Butter.*

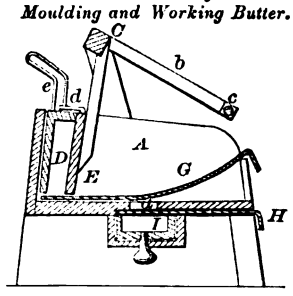

89482—E. H. Hull—*For Winding Watches.*

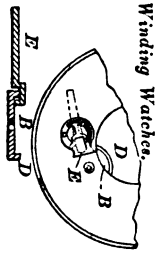

89483—J. Humphreys—*Bench Hook.*

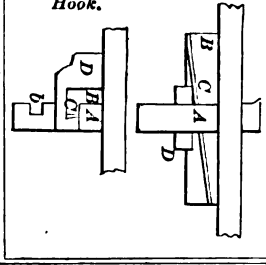

89484—A. Hutchinson—*Desk.*

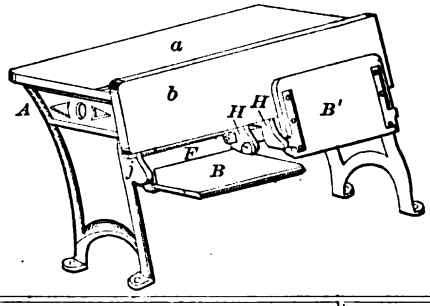

89487—G. King—*Whip.*

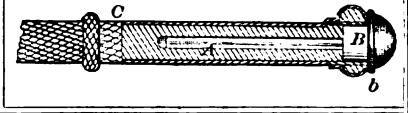

89485—P. Johnson—*Flour Cooler.*

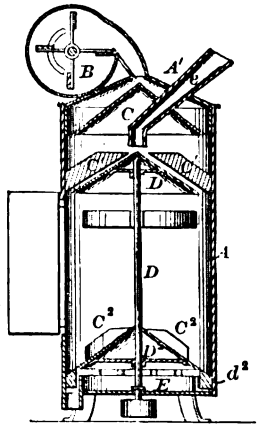

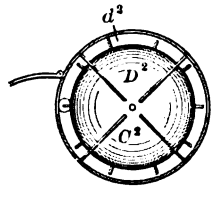

89486—C. B. Kerr—*Plow Point.*

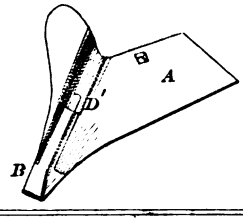

89488—W. S. Lukenbach—*For Flowing and Sensitizing Photographic Paper, &c.*

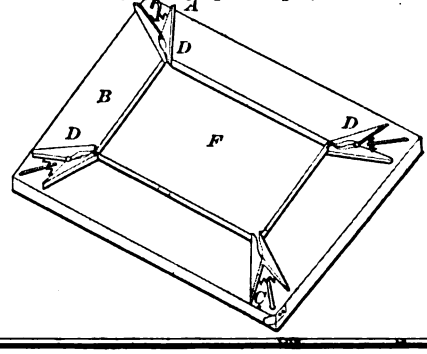

89489—L. Lyon—*Sewing Machine.*

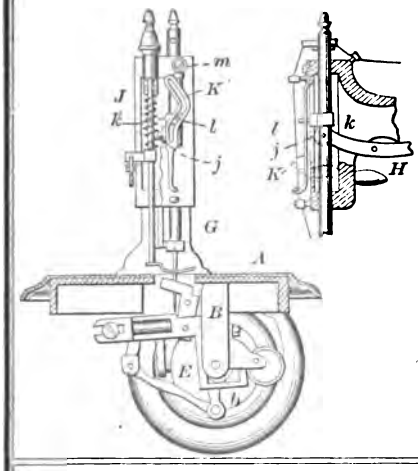

89490—B. K. Maltby—*Coffee Roaster.*

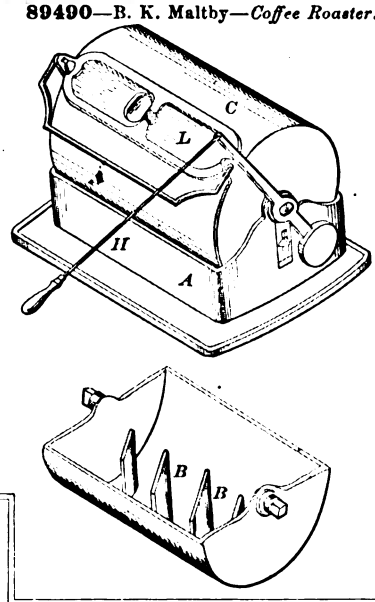

89491—J. J. Marcy—*For Spinning Metal.*

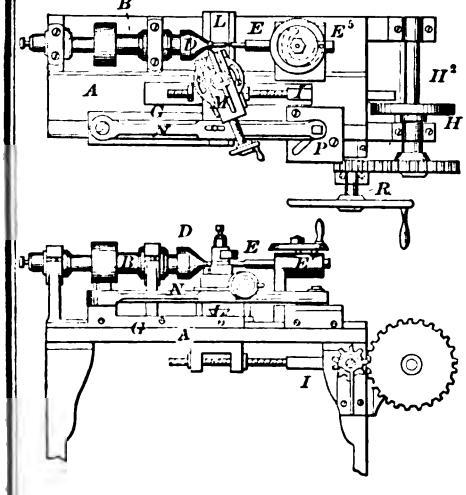

89492—J. McCann—*Retort.*

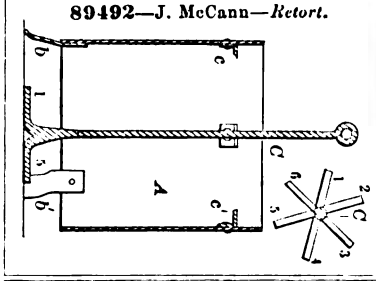

89494—M. Ohmer—*Bed Bottom.*

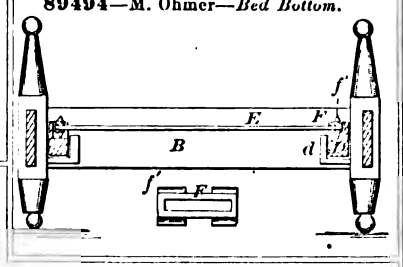

89495—J. Olmsted—*Car Brake.*

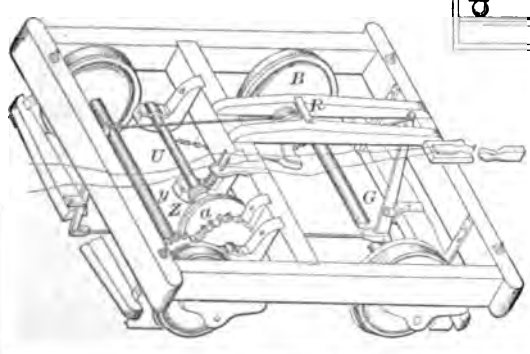

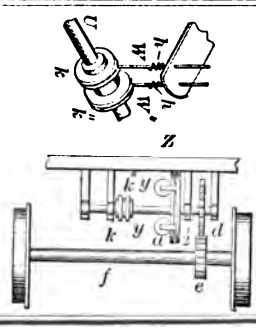

89496—J. W. Owen—*For Chair Seats. &c.*

89497—W. S. Owen—*Churn Dasher.*

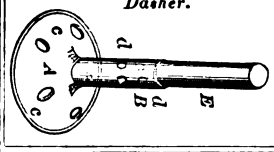

89498—S. H. Parish—*Shears.*

89499—H. L. Pierce—*Belt Hook.*

89500—Peyton & Wallach—*Bag Holder.*

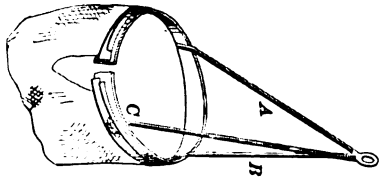

89501—G. M. Pratt—*For Sewing Machines.*

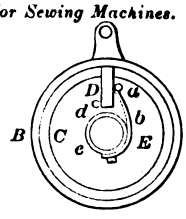

89503—C. R. Rand—*Trunk.*

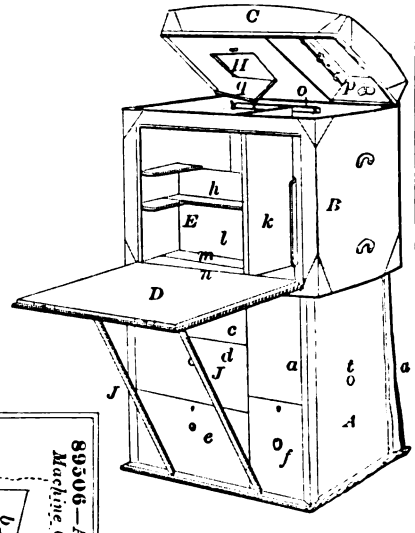

89505—T. P. Rossiter—*Stove.*

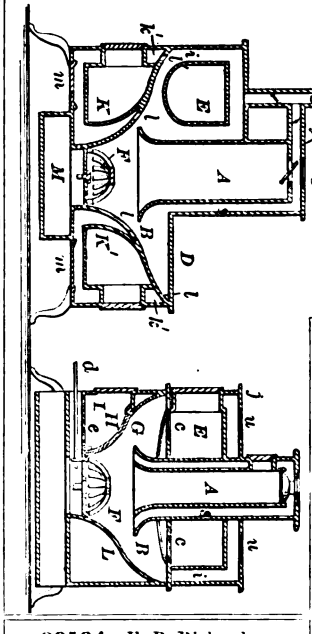

89506—A. F. Rumpf—*Sewing Machine Guide.*

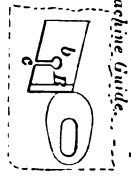

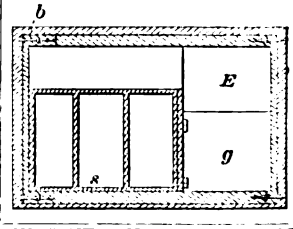

89504—E. P. Richardson—*Boots and Shoes*

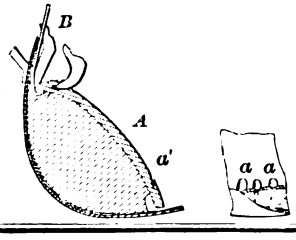

89502—T. Prosser—*Pin Drill.*

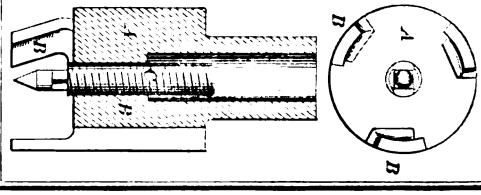

89507—C. W. Saladee—*Envelope.*

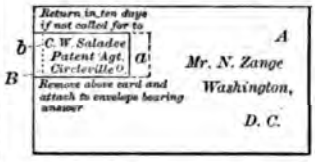

89509—J. W. Shaw—*Harvester.*

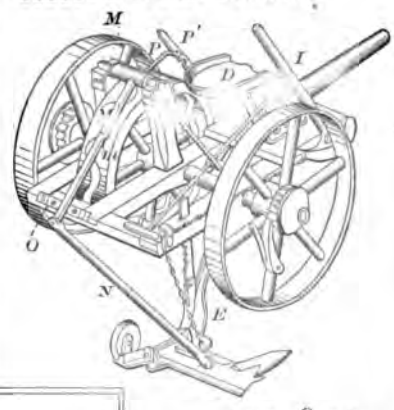

89514—Stevens & Brown—*Cleat and Chock.*

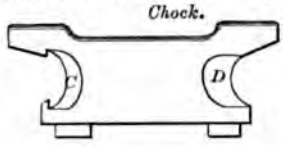

89511—J. F. Sipple—*Bolt.*

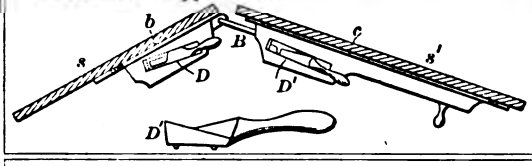

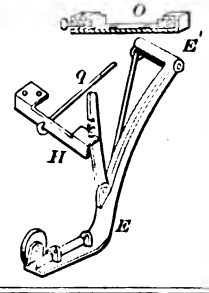

89512—E. & E. C. Slosson—*Corn Planter.*

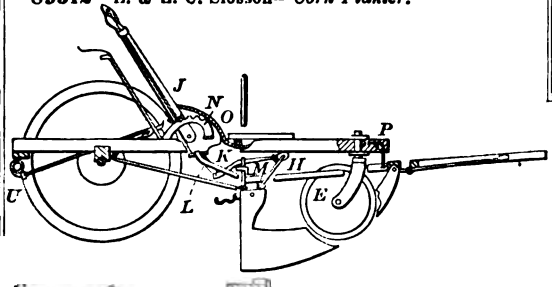

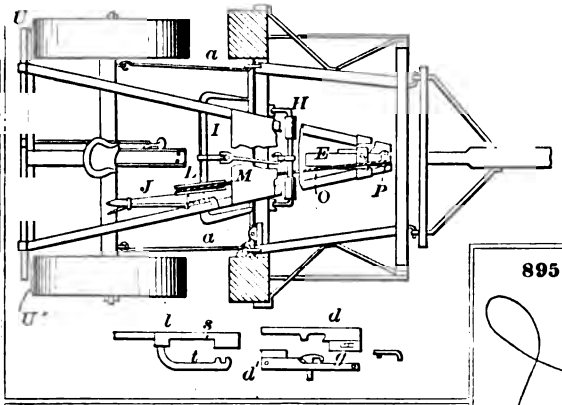

89513—C. Smith—*Abdominal Corset.*

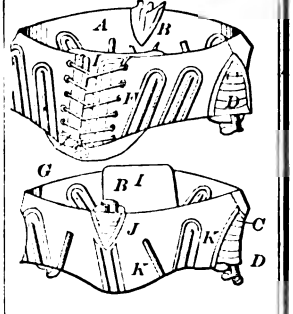

89516—B. L. Stone—*Toy Target.*

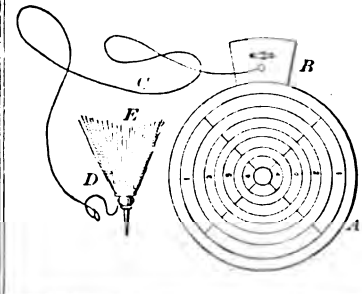

89517—G. C. Taft—*Wrench.*

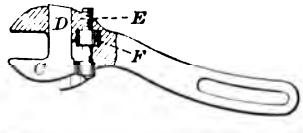

89518—E. B. Talbott—*Saw Mill.*

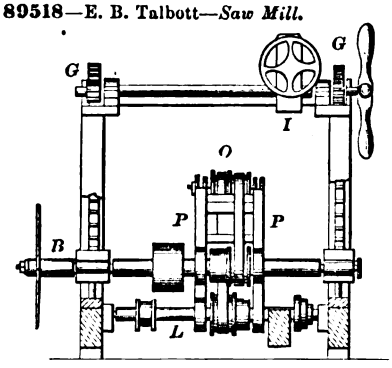

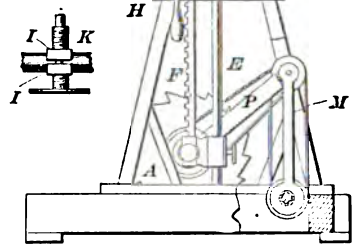

89519—J. P. Thompson—*Spool Case.*

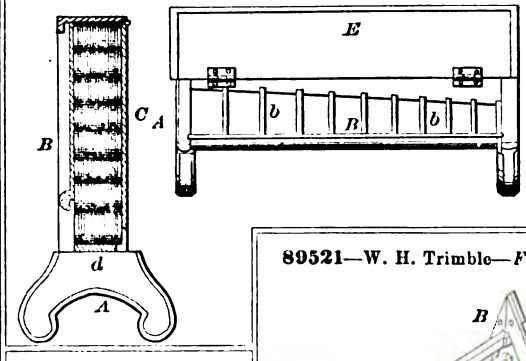

89520—N. Thompson—*Lantern.*

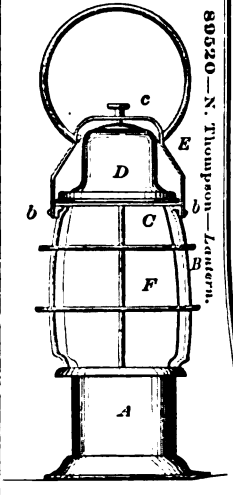

89521—W. H. Trimble—*Fence.*

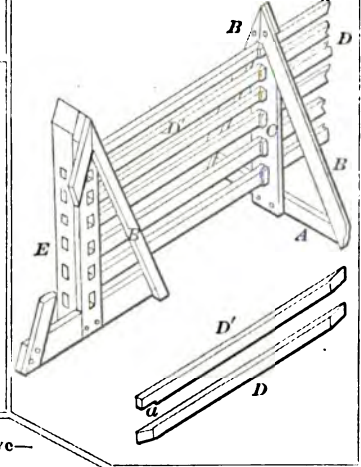

89522—H. Tucker—*Ornamenting Metal Surfaces.*

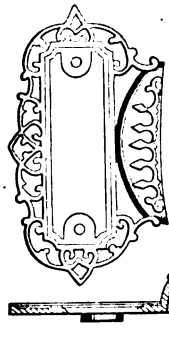

89525—W. V. Wall—*Car Coupling.*

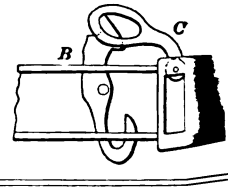

89524—A. H. Vancleve—*Railroad Time Table.*

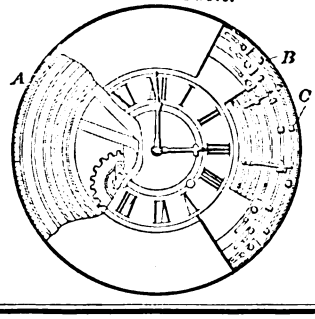

89526—Watson & Tinkel—*For Screening Grain and Seed*

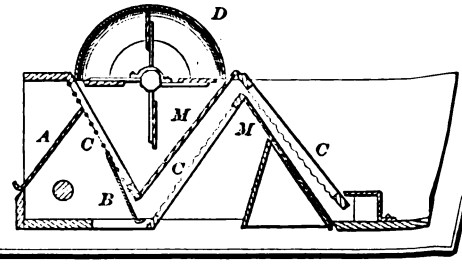

89528—A. Webster—*For Making Screws.*

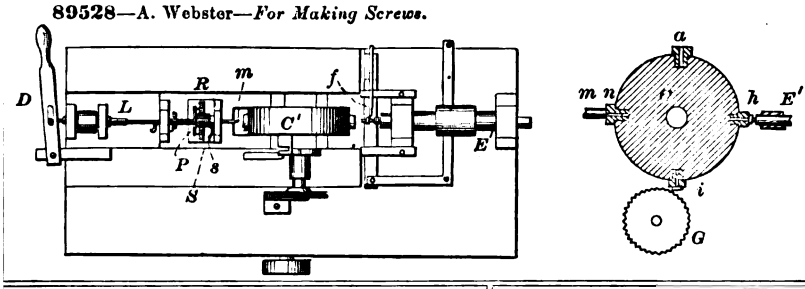

89530—E. Weissenborn—*For Polishing Pencils.*

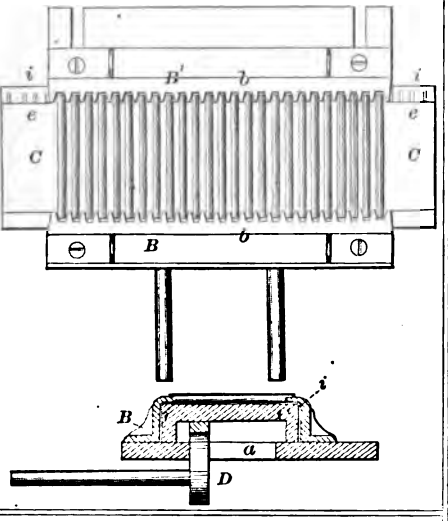

89529—A. Weeks—*Car Heater and Ventilator.*

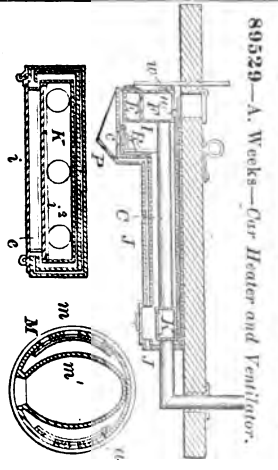

89533—A. Whitcomb—*Corn Husker.*

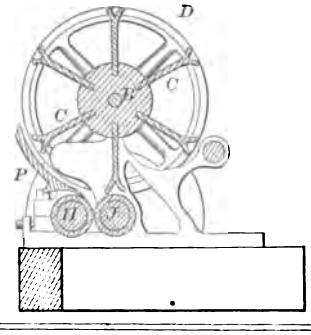

89534—J. C. Wightman—*Steam Pump.*

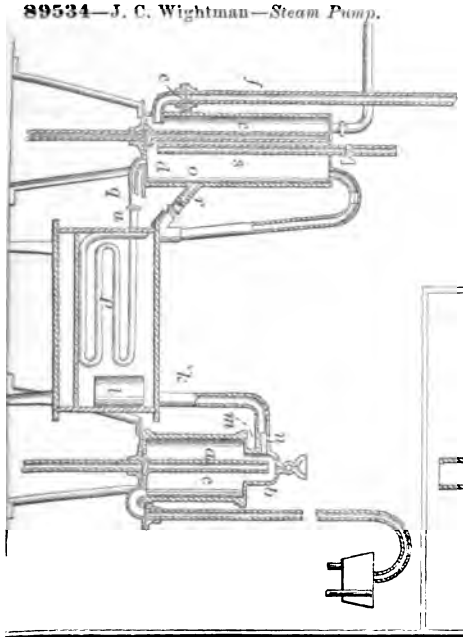

89536—J. S. Wood—*Lamp.*

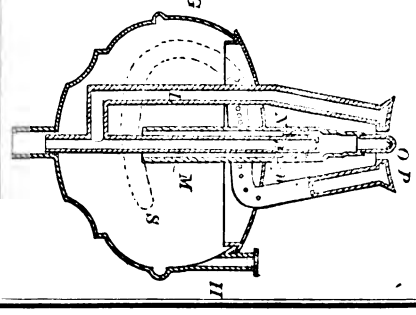

89535—J. W. Wilson—*Game.*

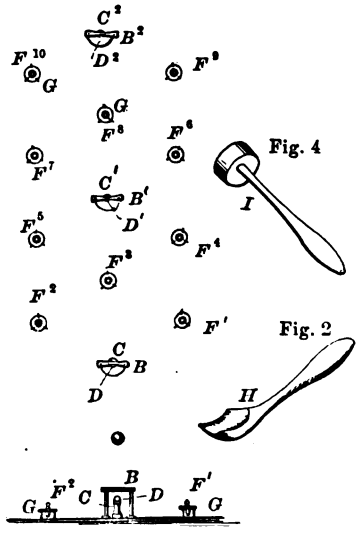

89537—G. M. Pullman—*Dining Car.*

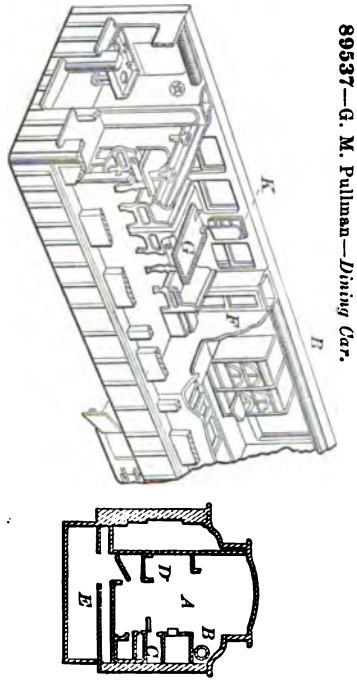

89538—G. M. Pullman—*Hotel Car.*

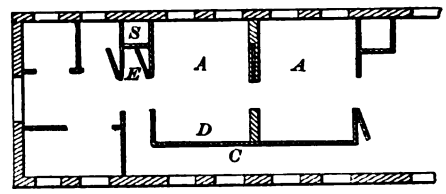

89539—A. Longstreet—*For Lifting Cars.*

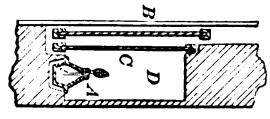

89540—R. Montgomery—*Corrugated Metal Building.*

89541—R. Montgomery—*Elevated Railway.*

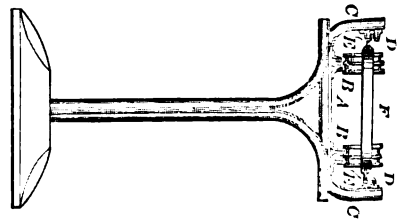

89543—H. C. Lawrence—*Velocipede.*

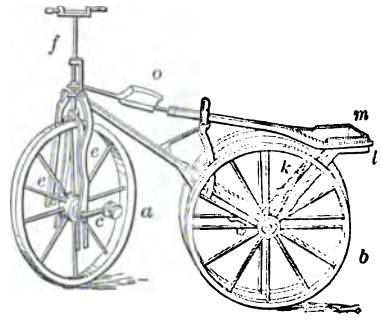

89542—T. C. Theaker—*Car Seat and Couch.*

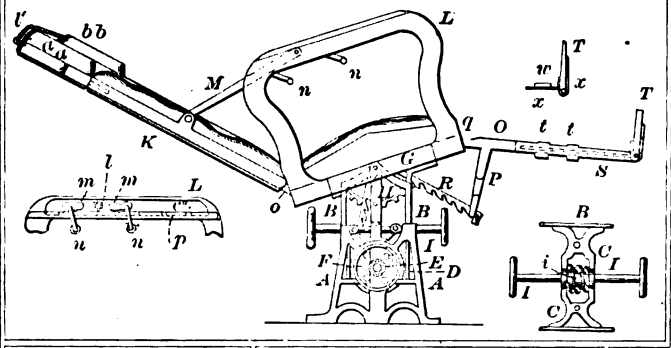

89544—D. Dolmage—*Car Coupling.*

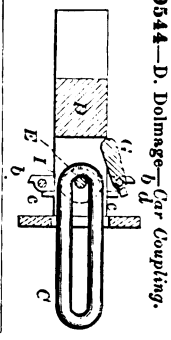

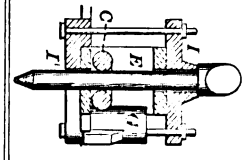

89545—C. E. Miller—*Wash Boiler.*

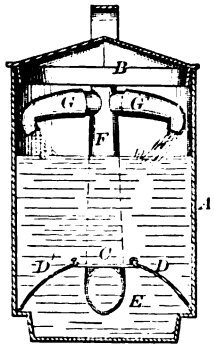

89547—L. L. Bettys—*Potato Digger.*

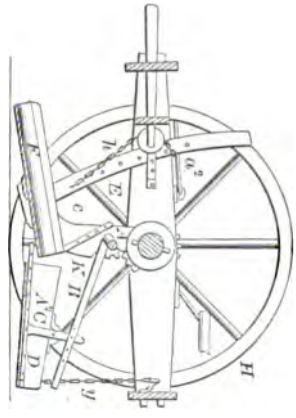

89548—E. Blake—*Spindle Step.*

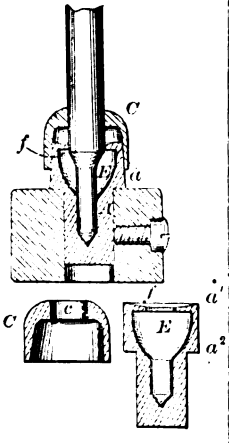

89546—B. F. Barney—*Corn Harvester.*

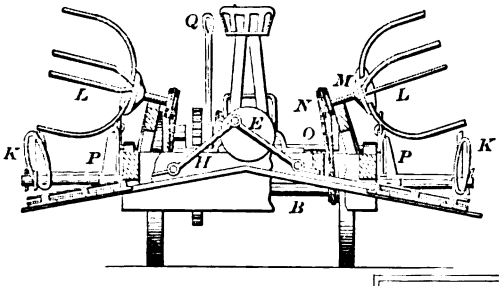

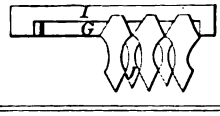

89549—N. A. Boynton—*Furnace.*

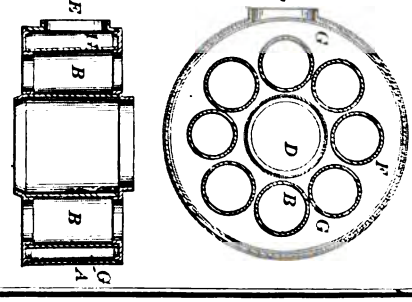

89551—J. N. Bunnell—*Trap.*

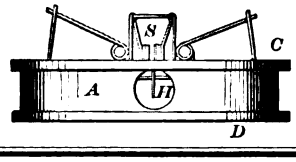

89550—J. Bowles—*Corn Sheller.*

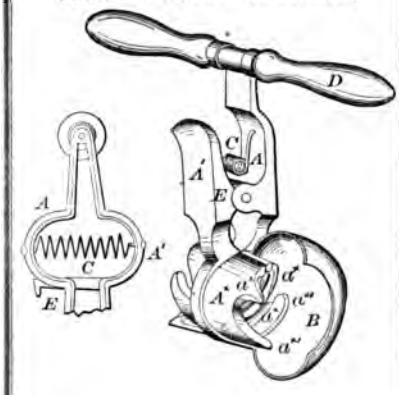

89552—M. Burnell—*Boot Blacking Machine.*

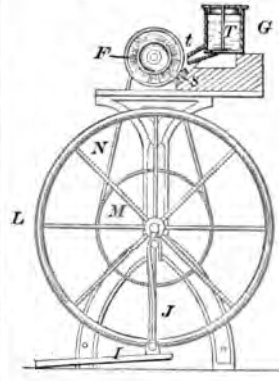

89553—E. Burnham—*Rope Guide.*

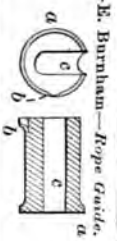

89554—R. Bustin—*Snow Plow.*

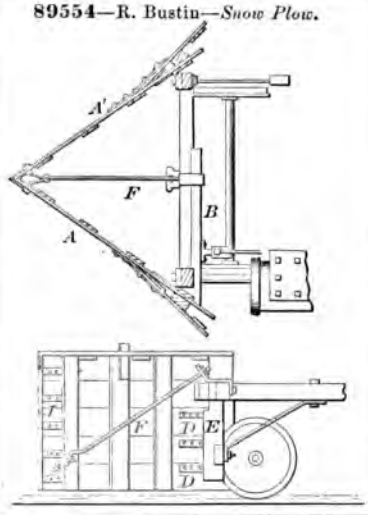

89556—J. Casson—*For Planing.*

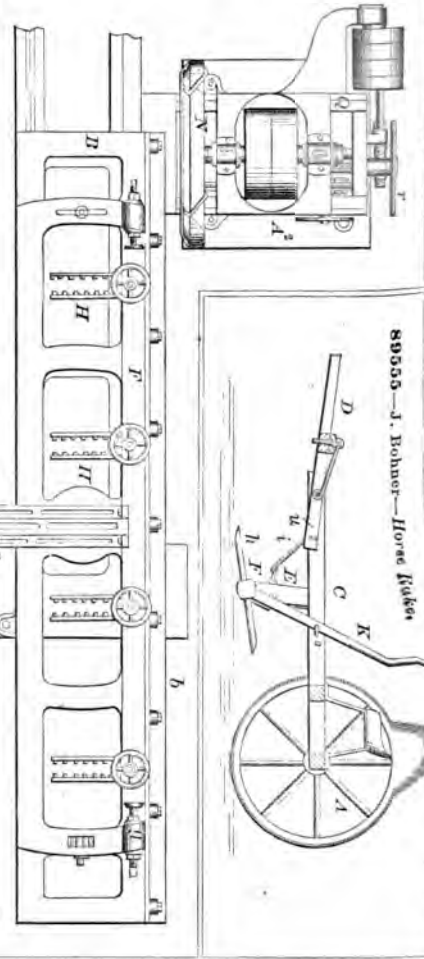

89555—J. Bohner—*Horse Rake.*

89557—W. A. Caswell—*Blind Stop.*

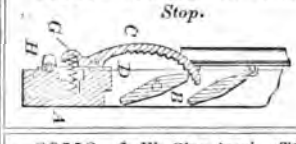

89558—J. W. Cleveland—*Tire Machine.*

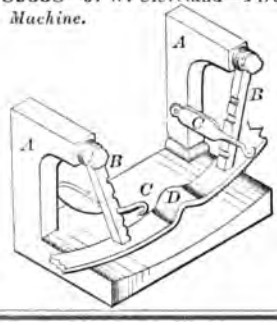

89559—E. Colson—*Saw Teeth.*

Fig. 2

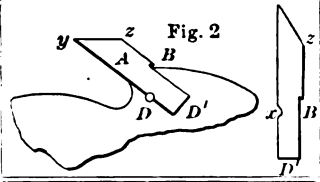

89560—H. Cooper—*Cheese Hoop Follower.*

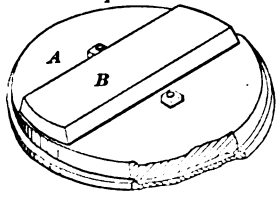

89563—G. H. Daw—*Cartridge.*

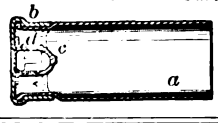

89567—E. Eaton—*Toy.*

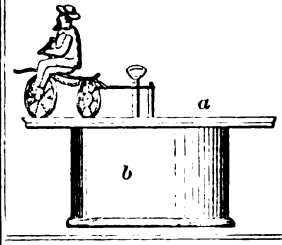

89564—J. M. De Witt—*Fastening Handles to Tools.*

89566—Dunn & Burroughs—*Fan.*

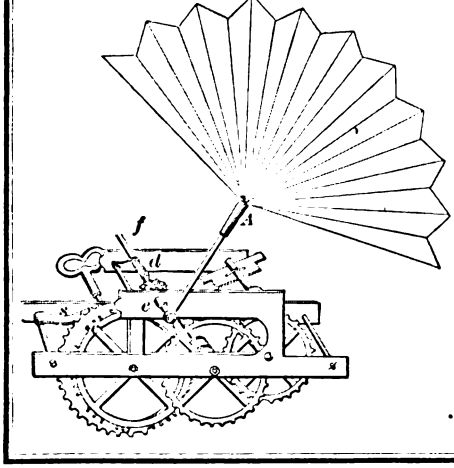

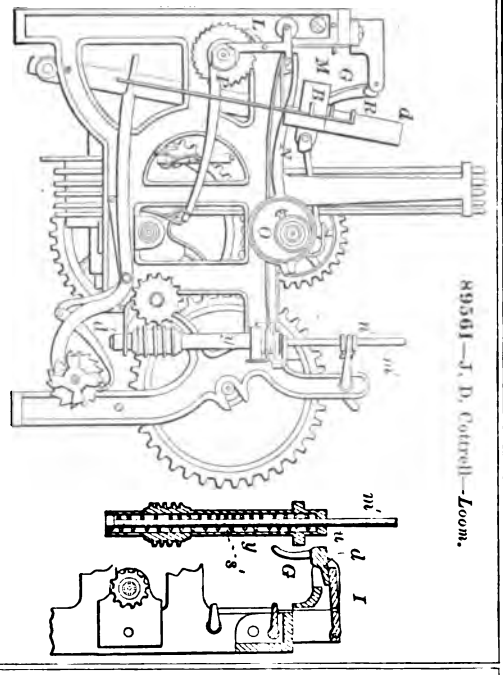

89561—J. D. Cottrell—*Loom.*

89565—J. M. Dormon—*Plow.*

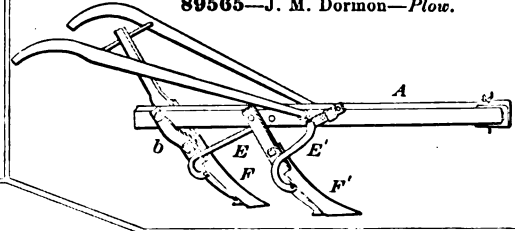

89568—C. E. Evard—*Freeing Tool, Screw and Jewel Setter.*

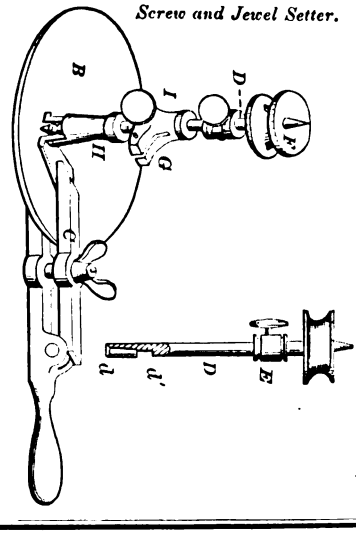

89569—J. Fanyon—*Measure and Funnel.*

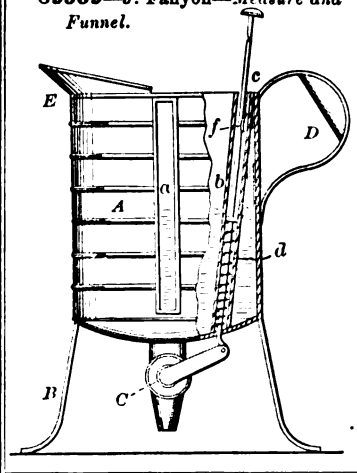

89570—J. H. Fellows—*Fastening Wagon Seats.*

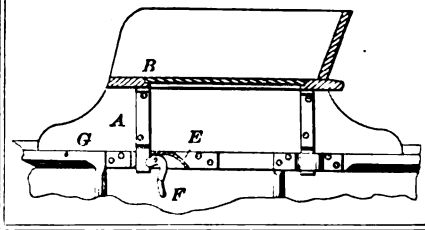

89571—W. A. Field—*Potato Digger.*

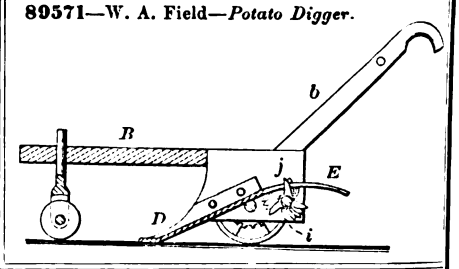

89572—S. Fisk—*Wash Boiler.*

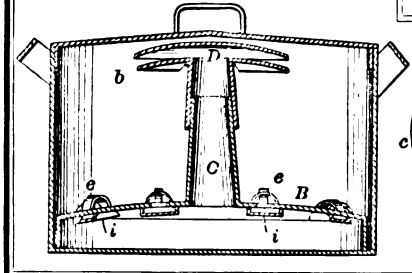

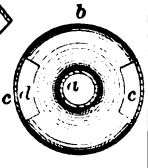

89573—Garrison & Stevens—*Holdback.*

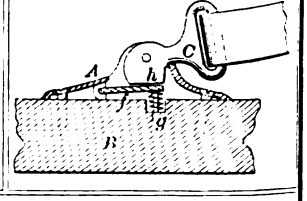

89578—S. Hodkinson—*Switch.*

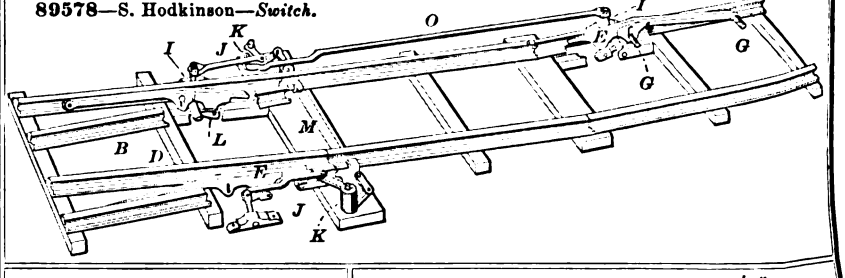

89577—J. A. Haase—*Floor Clamp.*

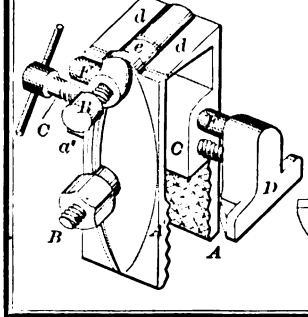

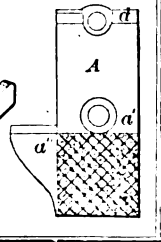

89575—J. Goodin—*Wrench.*

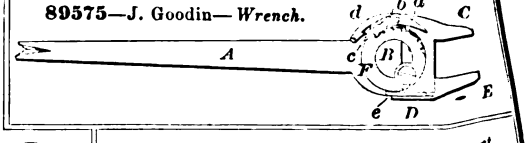

89576—G. H. Gregory—*Whip Socket.*

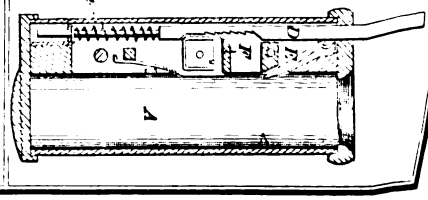

89580—H. S. Hudson—*Regulator for Lamps.*

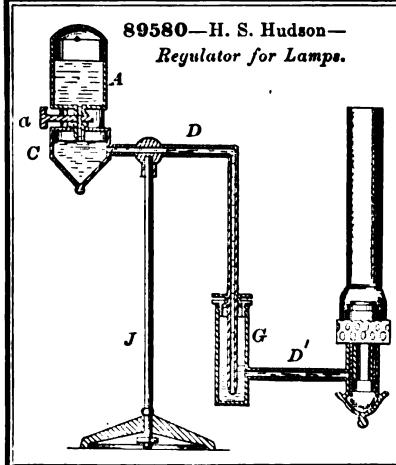

89581—R. K. Huntoon—*Governor.*

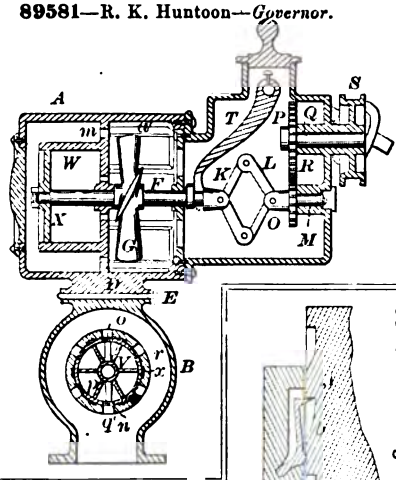

89584—J. H. Irwin—*Velocipede.*

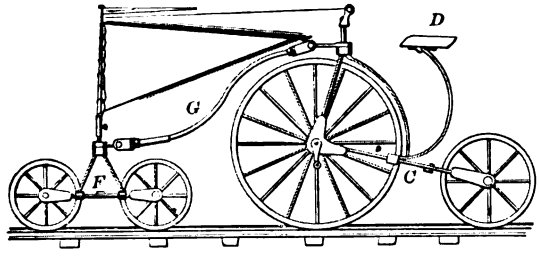

89587—G. King—*Sash Lock.*

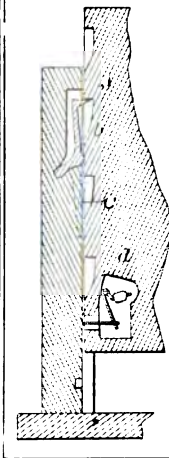

89583—I. Ickelheimer—*For Watch Winding.*

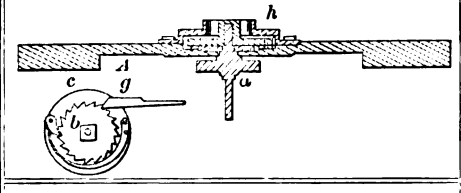

89589—E. McLane—*Corn Separator.*

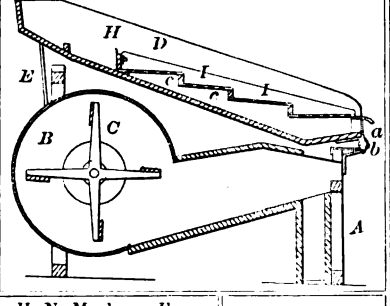

89586—C. F. Keller—*Locking Nuts.*

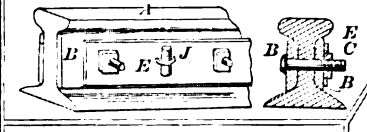

89590—H. N. Mecker—*For Washing Hides and Leather.*

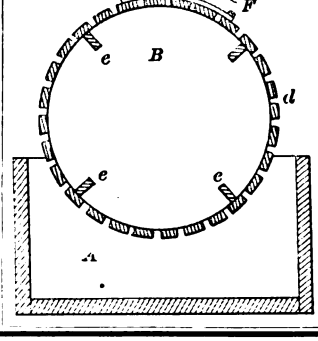

89591—A. P. Messer—*Inhaling Tube.*

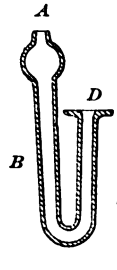

89585—J. Johnson—*Sun Dial.*

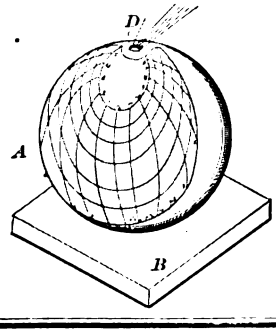

89588—Maxim & Radley—*For Making Gas.*

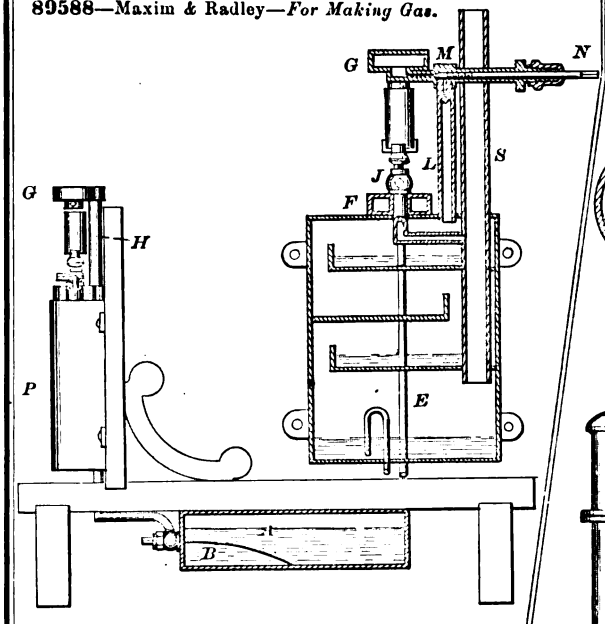

89592—P. Munzinger—*Straddle Pipe.*

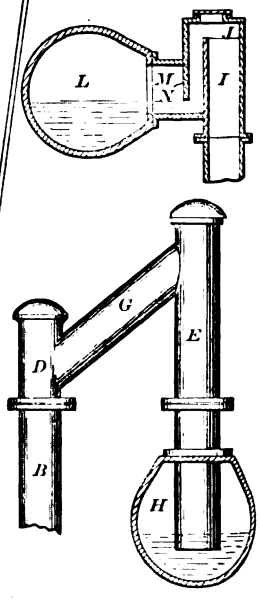

89594—E. W. Owen—*Inhaling Apparatus.*

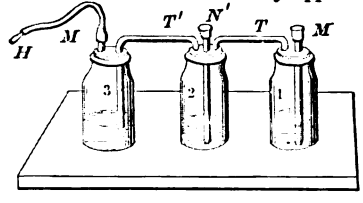

89595—Page & East—*Steam Generator.*

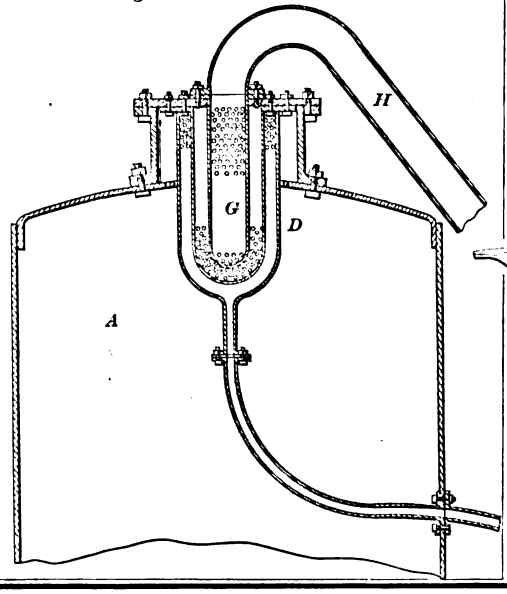

89593—J. H. Murrill—*Forming Machine.*

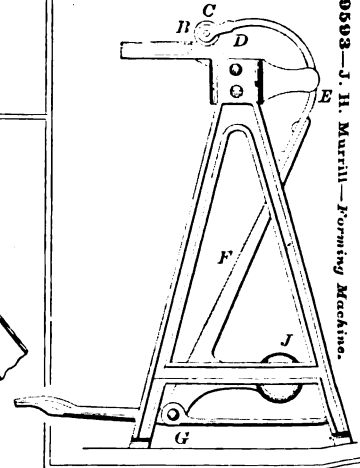

89596—E. Parker—*Door Key.*

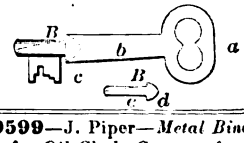

89599—J. Piper—*Metal Binding for Oil Cloth, Carpets, &c.*

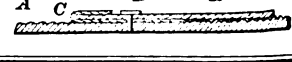

89597—S. B. Parmenter—*Spinning Frame.*

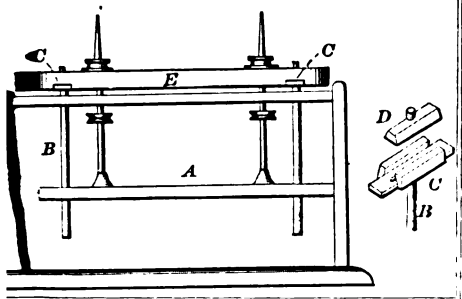

89598—E. S. Pierce—*For Conveying Screw Blanks.*

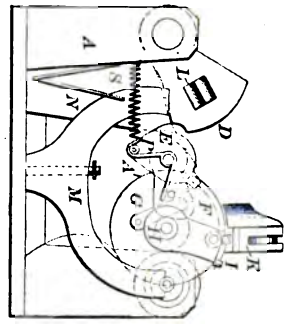

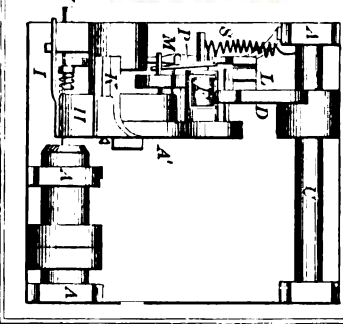

89602—G. Schreyer—*Axle Skein.*

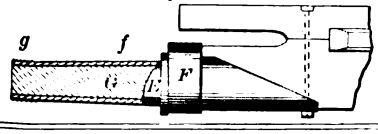

89601—J. Sheldon—*Hat Blocking Machine.*

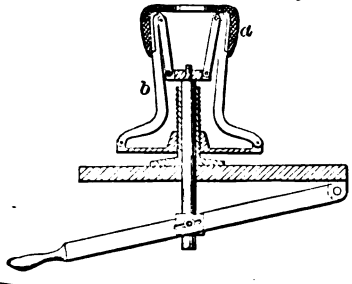

89600—J. F. Sanford—*Lamp.*

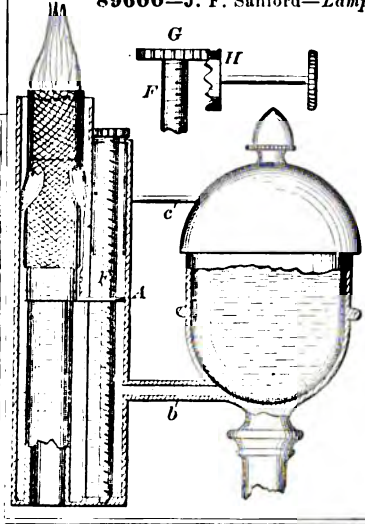

89604—W. Stewart—*Carriage Sash Fastener and Supporter.*

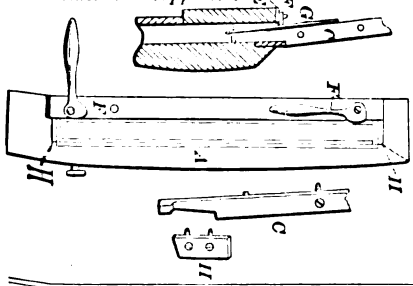

89605—S. Stoughton—*Horse Rake.*

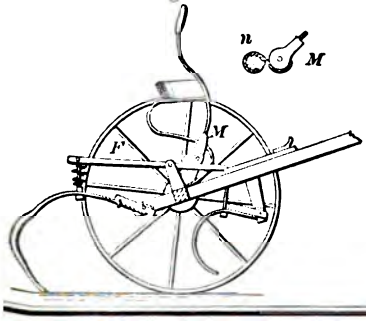

89603—R. A. Smith—*Horse Hay Fork.*

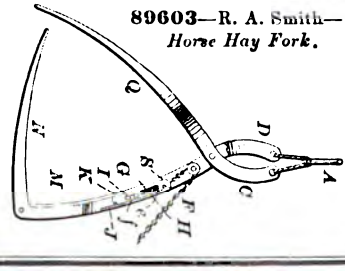

89606—J. H. Stringfellow—*Seeding Machine.*

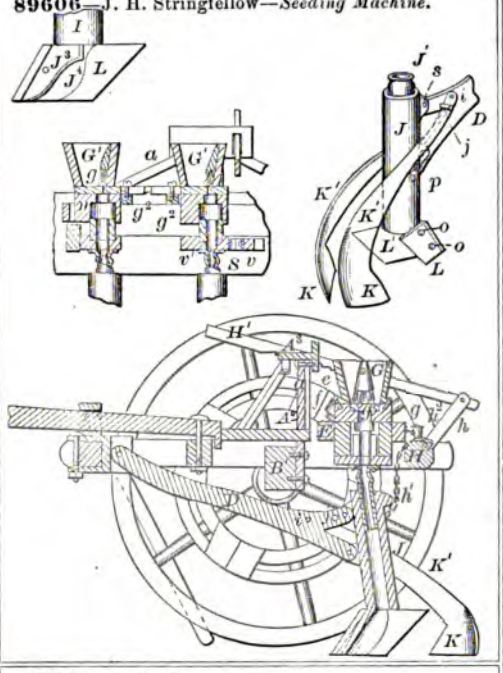

89609—Thwing & Fowler—*Grinding Mill.*

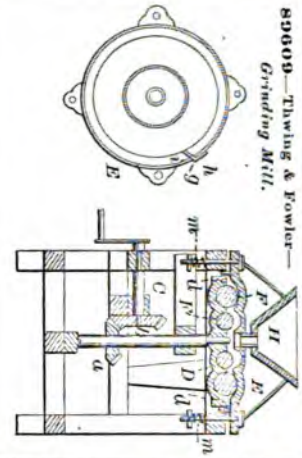

89610—W. D. Titus—*Furnace.*

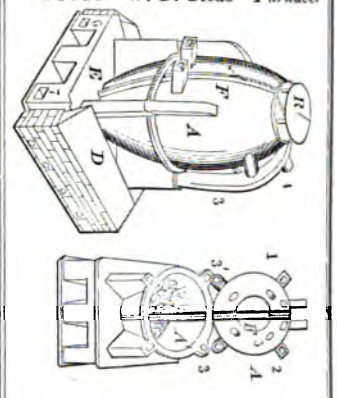

89607—C. B. Thayer—*Toy Gun.*

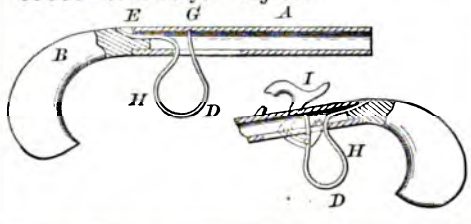

89608—S. R. Thompson—*Plow.*

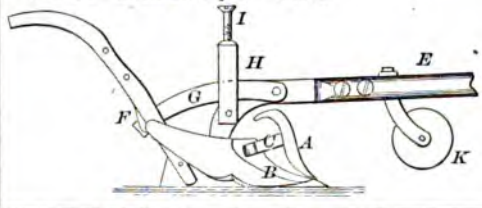

89612—J. S. Wallis—*Cotton Bale Tie.*

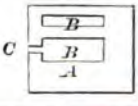

89613—B. Wardwell—*Culinary Apparatus.*

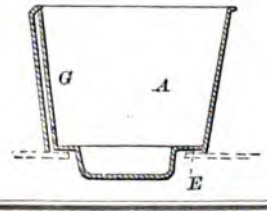

89614—S. H. Wheeler—*Draught Equalizer.*

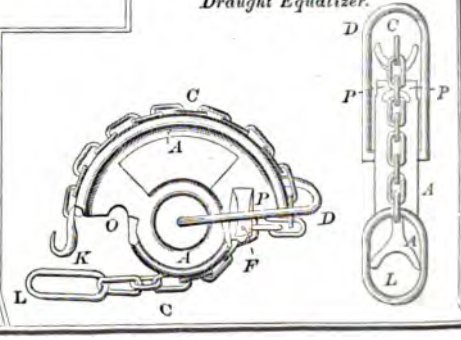

89611—J. Wadleigh—*For Raking and Cocking Hay.*

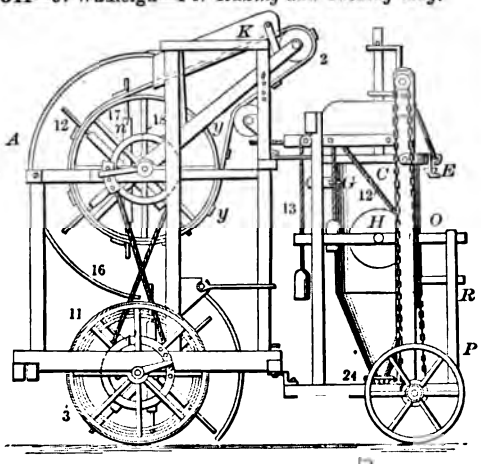

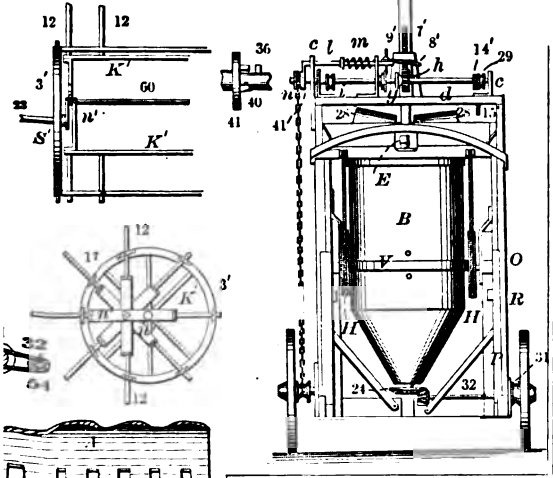

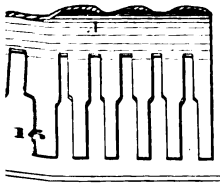

89615—B. Wright—*Root Digger.*

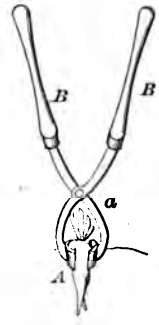

89616—S. S. Allen—*Churn.*

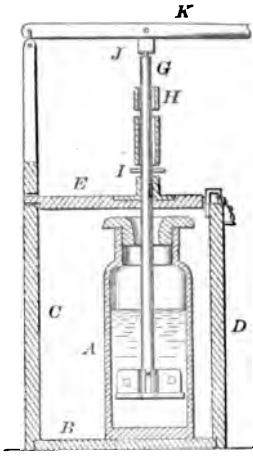

89617—J. S. Baldwin—*For Regulating the Flow of Liquids under Pressure.*

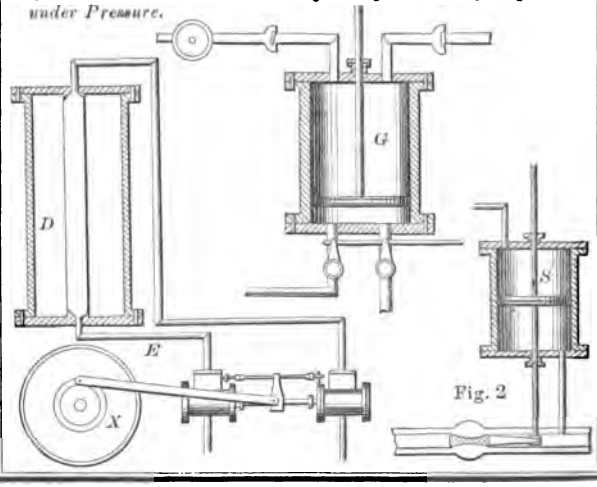

Fig. 2

89618—Barber & Loomis—*Needle Setter and Thread Pincers.*

89619—A. Bayley—*Hay Rack.*

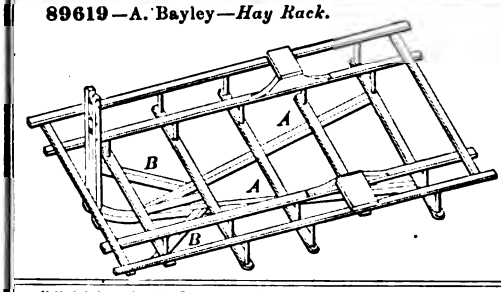

89620—A. G. Bevin—*Furnace.*

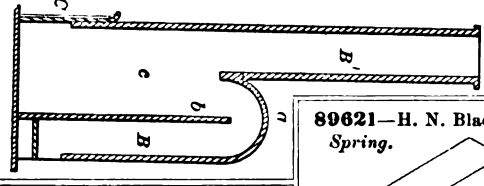

89621—H. N. Black—*Spring.*

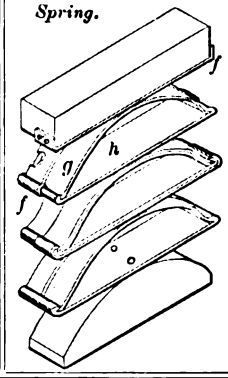

89622—W. I. Blackman—*Book Binding.*

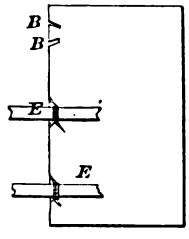

89623—Blake & Carpenter—*For Swaging Axe Polls.*

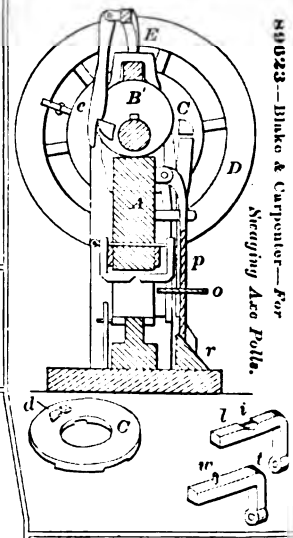

89624—J. E. Boyle—*For Trimming Cue Leathers.*

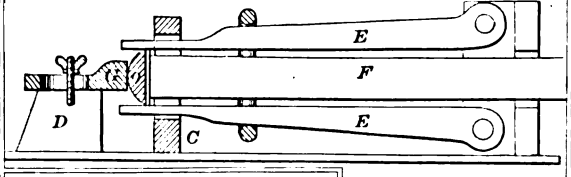

89625—W. H. Brock—*Centre Square.*

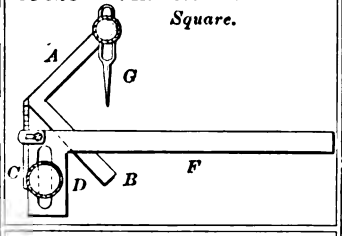

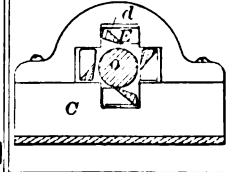

89626—E. Brown—*Trap.*

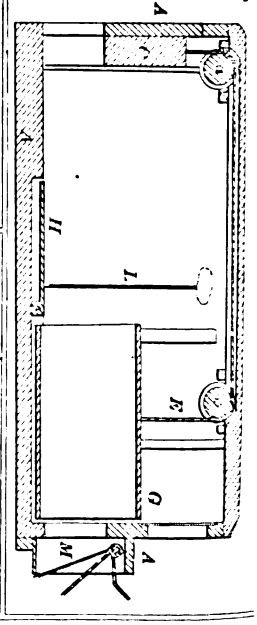

89627—J H. Brown—*Mitre Machine.*

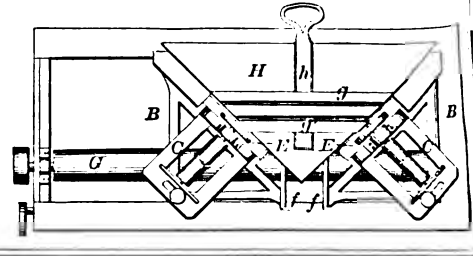

89628—M. S. Brownell—*Caster.*

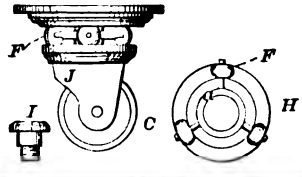

89629—J. M. Buchanan—*Churn Dasher.*

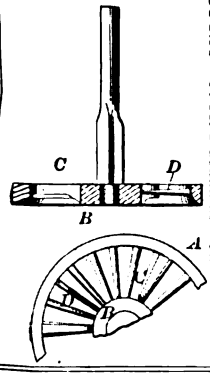

89630—S. Carlton—*Drain Pipe.*

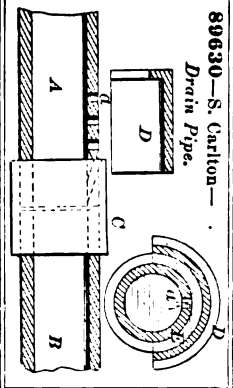

89631—Carter & Gibson—*Upsetting Machine.*

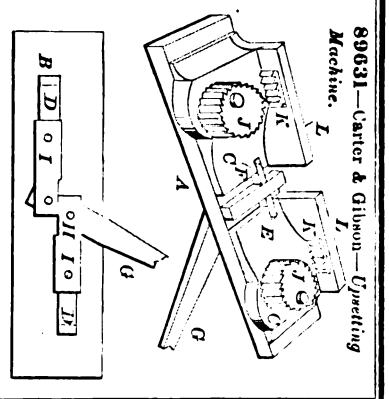

89632—J. Conway—*Balance Line for Mast Hoops.*

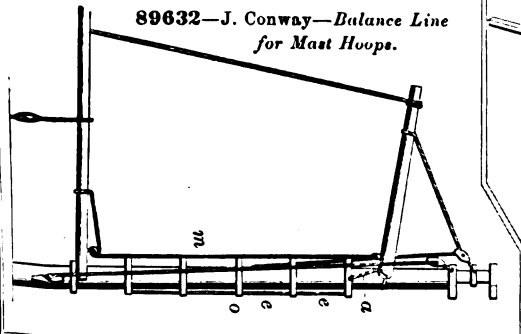

89634—J. M. Culver—*Cultivator.*

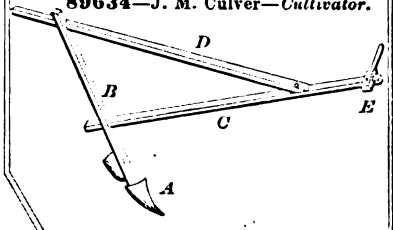

89633—P. Cullen—*Boot Jack.*

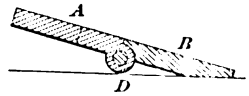

89636—Davis & Smith—*Car Starter.*

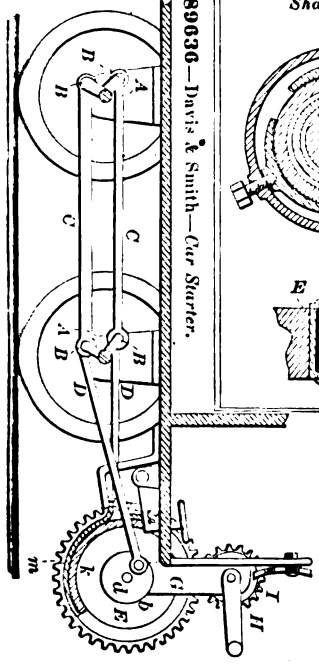

89637—E. A. Dayton—*Shaft Bearing.*

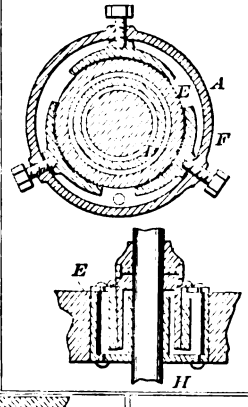

89635—G. H. Davis—*Steering Apparatus.*

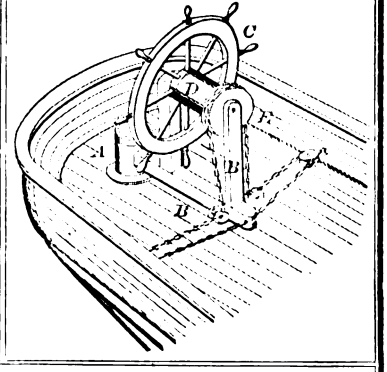

89638—J. Dittrich—*Sad Iron.*

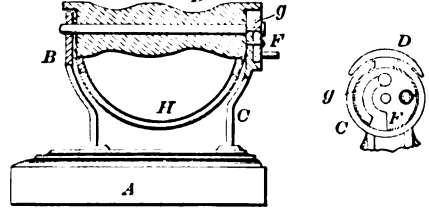

89639—G. B. Douglas—*Wagon Brake.*

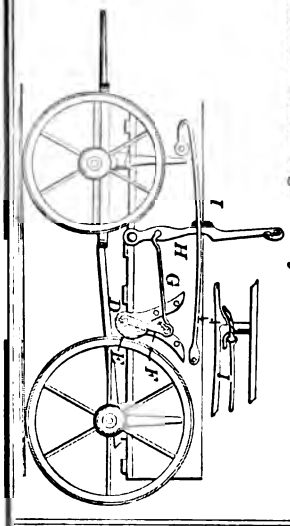

89640—W. R. Dunn—*Boot Crimper.*

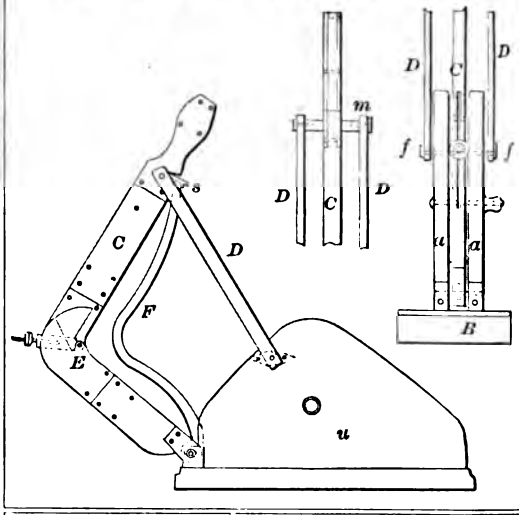

89641—R. S. Dunning—*Key Fastener.*

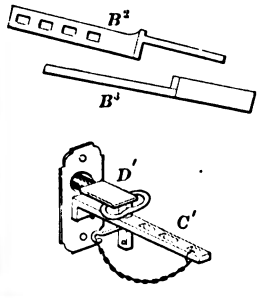

89642—F. J. Emery—*Metal Ornaments.*

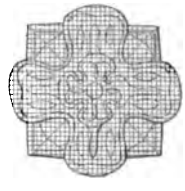

89643—Farnham & Mosher—*Fanning Mill.*

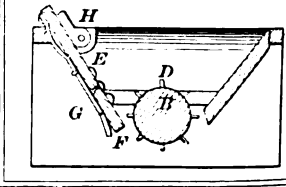

89644—J. E. Finley—*Beehive*

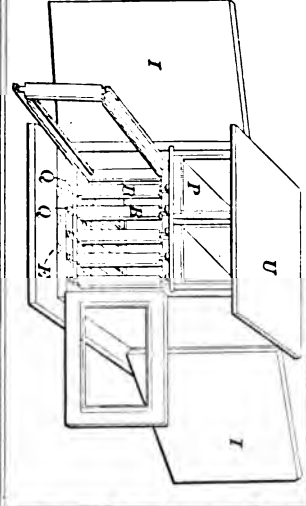

89646—C. J. Fisher—*Neck Pad for Horses.*

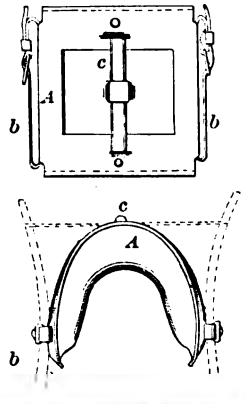

89345—J. E. Finley—*Churn.*

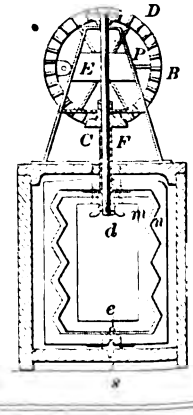

89647—E. J Fraser—*Uterine Supporter.*

89648—T. Fravel—*For Treating Diseases.*

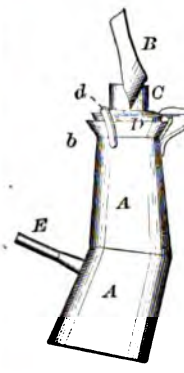

89650—A. C. Gallahue—*Steam Engine.*

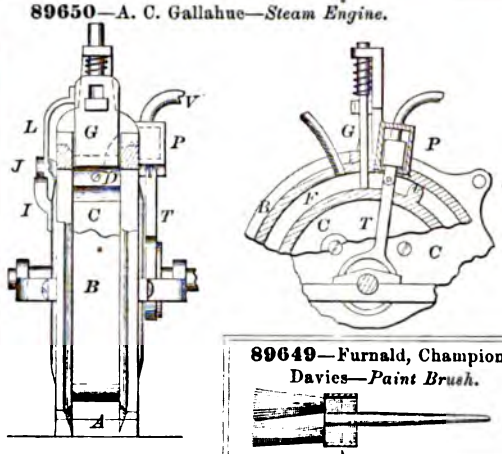

89649—Furnald, Champion & Davies—*Paint Brush.*

89652—Goodrich & Colburn—*Pulley.*

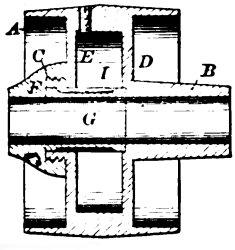

89651—G. L. Gerard—*Bed Bottom.*

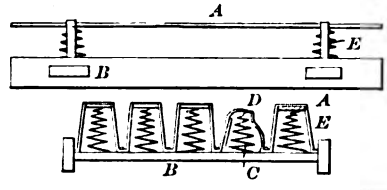

89656—T. Harbottle—*Press.*

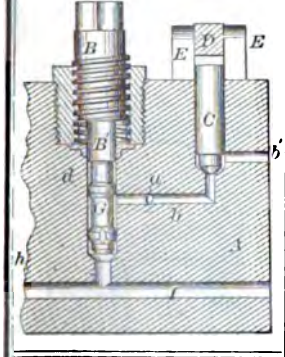

89657—W. Haslup—*Water Wheel.*

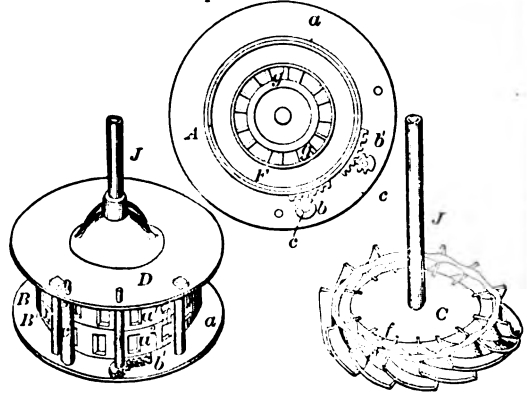

89655—R. Ham—*Stove.*

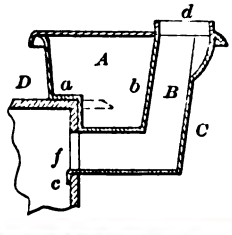

89653—Goodwin & Bennett—*Dough Rolling Machine.*

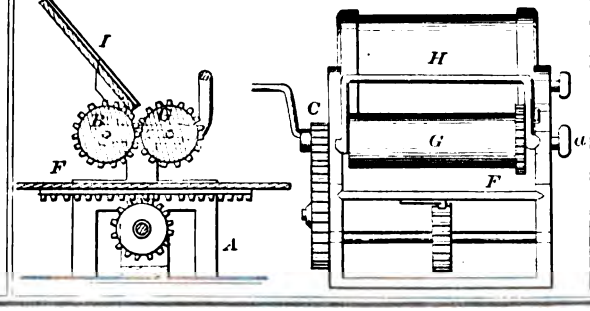

89658—G. W Hatch—*Sleigh Runner.*

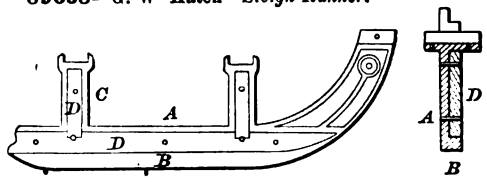

89659—Hazelton, Southard & Merwin—*Nut Lock.*

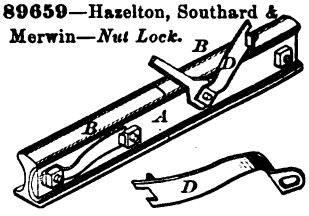

89660—G. W. Helt—

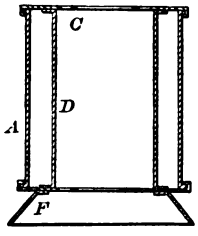

Stove Pipe Thimble.

89662—D. P. Henry—*Pump.*

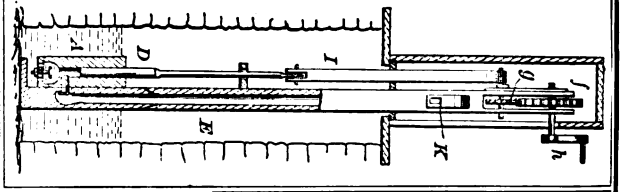

89661—T. N. Henderson—*Potato Digger.*

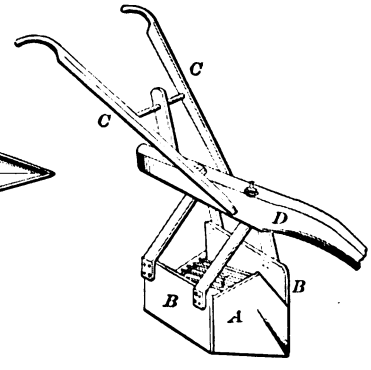

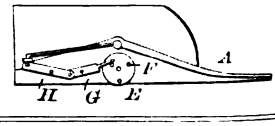

89663—J. Heroux—*For Propelling Boats.*

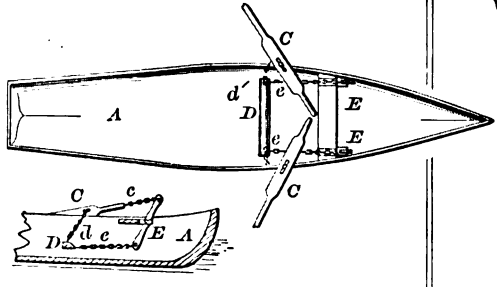

89664—E. Jeanjaquet—*Bottle Filler.*

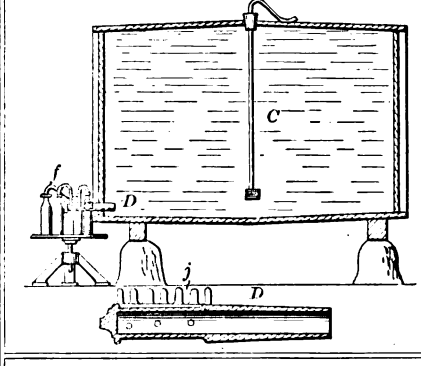

89665—J. Jonson—*Carburettor.*

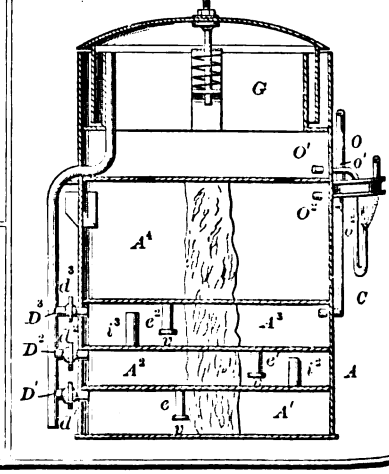

89666—J. G. Krichbaum—*Pail Ear.*

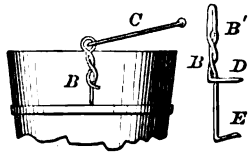

89667—A. Lange—*For Setting the Hands of Watches.*

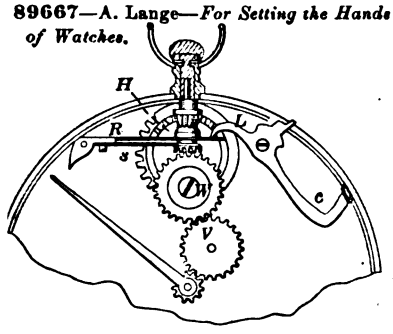

89669—G. W. Lee—*Feed Cutter for Threshing Machines.*

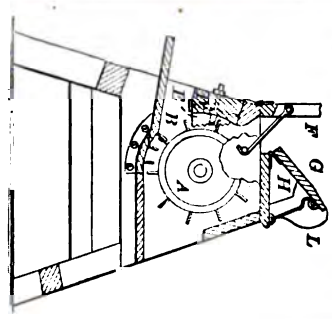

89668—D. S. Leavitt—*Truss Supporter.*

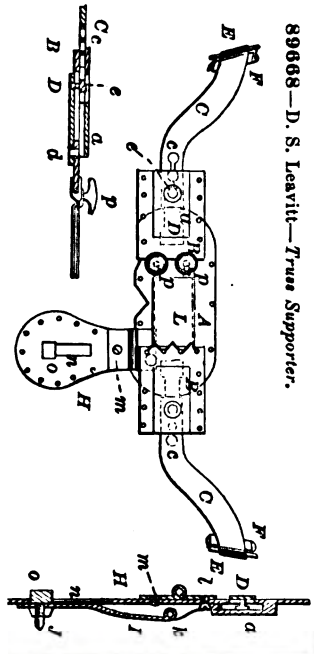

89671—J. H. Lewis—*Vise.*

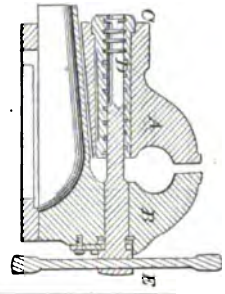

89670—M. Lehmer—*Stove.*

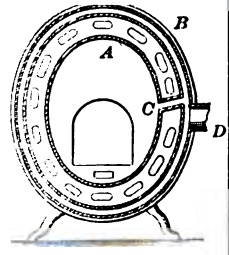

89672—J. H. Luddington—*Pump.*

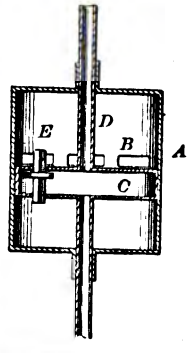

89673—O. E. Mabie—*For Elevating Hay.*

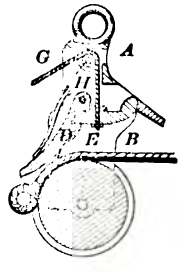

89674—T. W. Mahler—*Water Wheel Gate.*

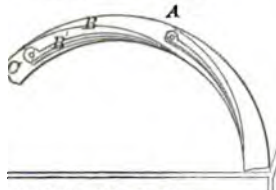

89675—W. H. Mantz—*Envelope Opener.*

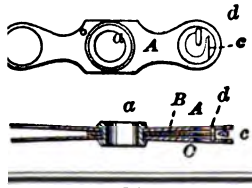

89676—W. D. McKinney—*Ditching Machine*

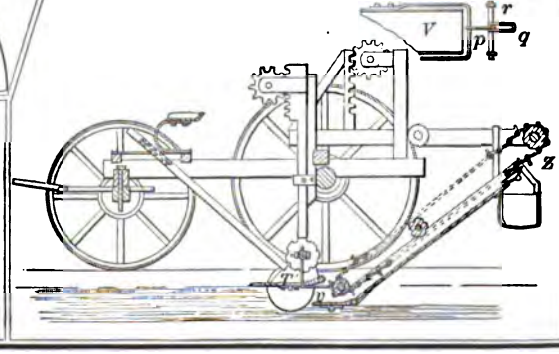

89677—J. F. McNee—*Rain Lead.*

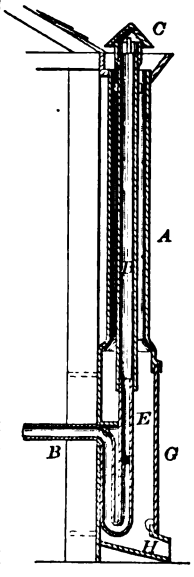

89678—C. L. Merrill—*Horse Power.*

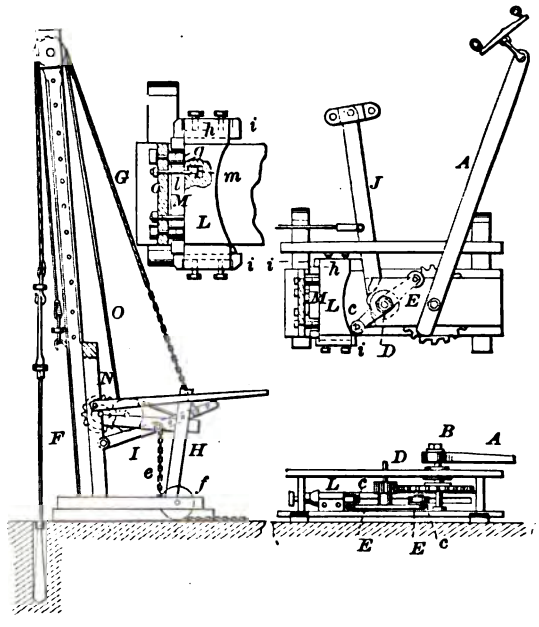

89679—H. T. Metzgar—*Velocipede.*

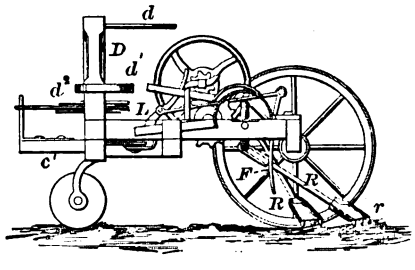

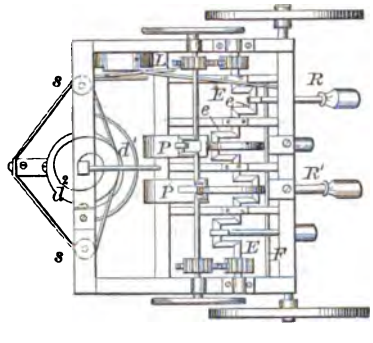

89680—A. Morgan—*Brick Machine.*

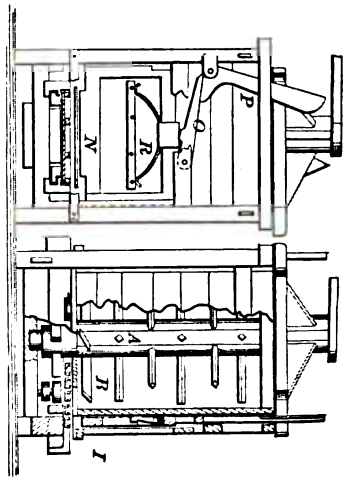

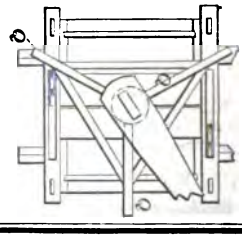

89694—H. Skinner—*Loom.*

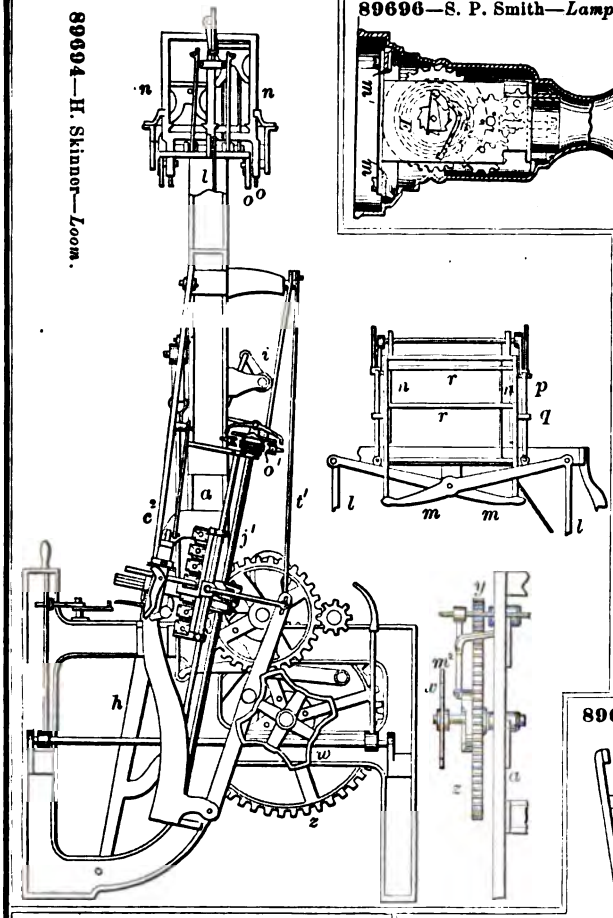

89696—S. P. Smith—*Lamp.*

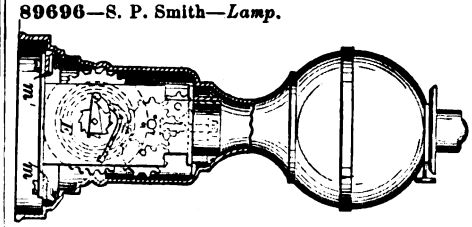

89698—F. Städter—*Stove Drum.*

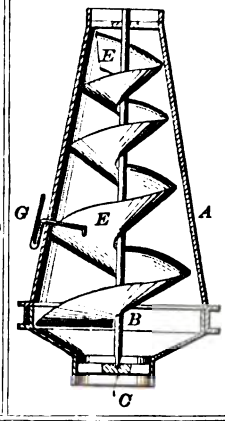

89697—S. P. Smith—*Horse Rake.*

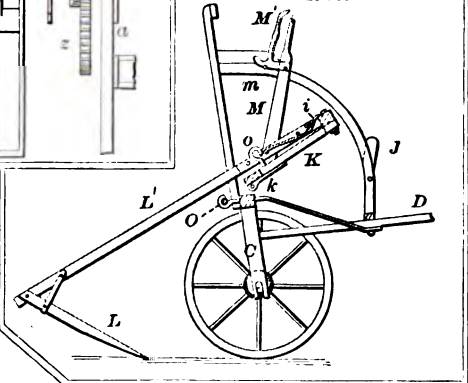

89699—A. C. Stevens—*Fire Arm.*

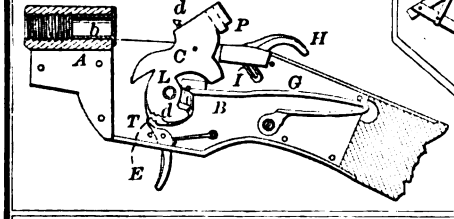

89700—Sturdy & Young—*Velocipede.*

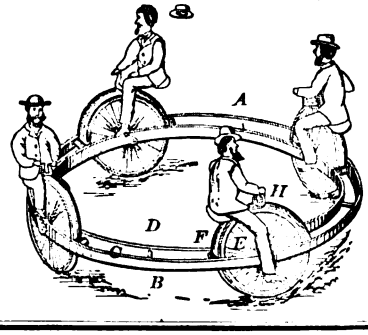

89702—G. C. Taft—*Wrench.*

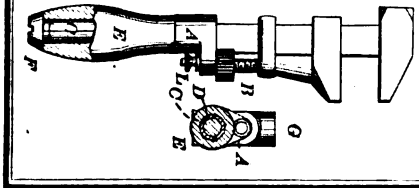

89687—H. D. Richardson—*Tool for Turning Centres.*

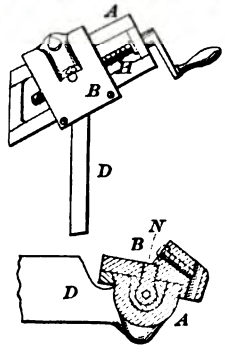

89689—F. C. Richer—*Buckle.*

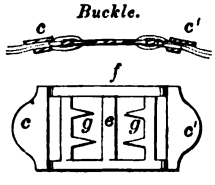

89690—F. C. Richer—*Wrench.*

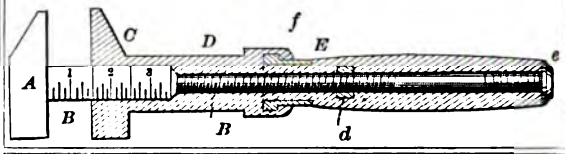

89691—A. Rosewater—*Switch.*

Fig. 1

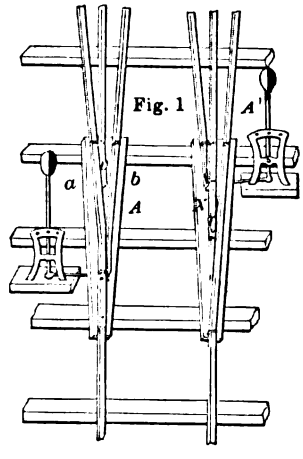

Fig. 2

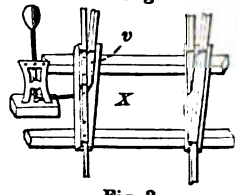

Fig. 3

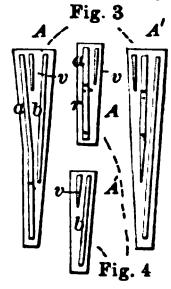

Fig. 4

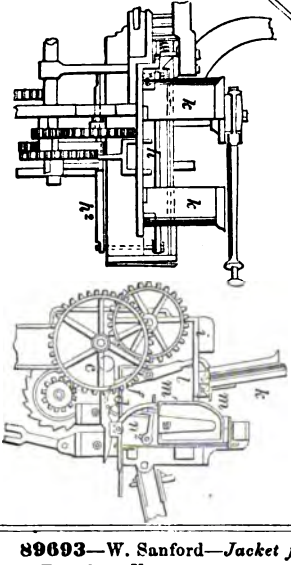

89692—W. Rossetter—*Loom.*

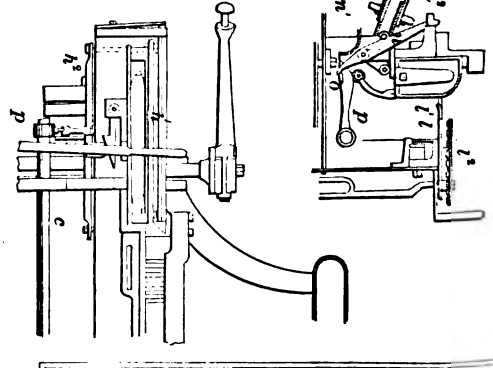

89693—W. Sanford—*Jacket for Fireplace Heaters.*

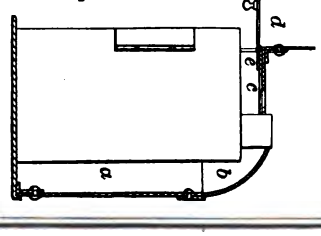

8.—J. C. Smith—*Velocipede.*

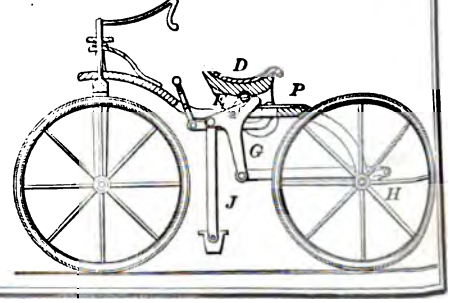

89694—H. Skinner—*Loom.*

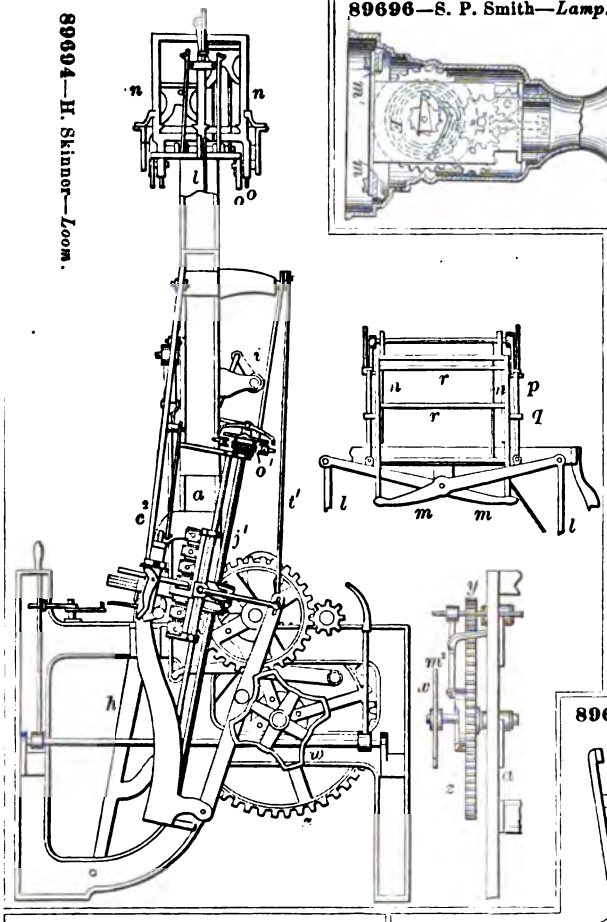

89696—S. P. Smith—*Lamp.*

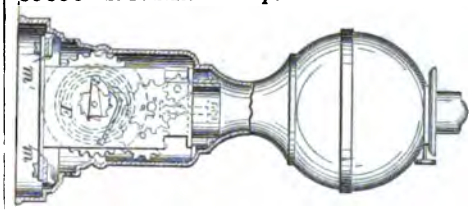

89698—F. Städter—*Stove Drum.*

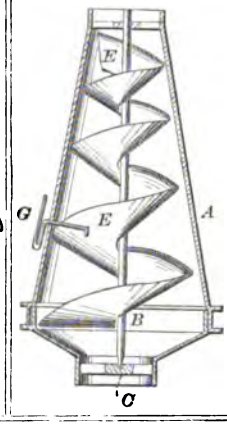

89697—S. P. Smith—*Horse Rake.*

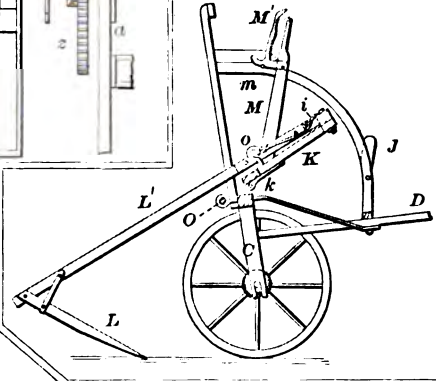

89699—A. C. Stevens—*Fire Arm.*

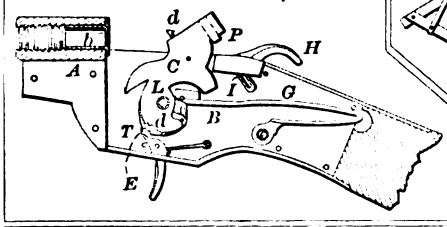

89700—Sturdy & Young—*Velocipede.*

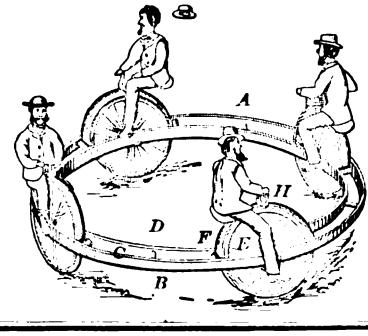

89702—G. C. Taft—*Wrench.*

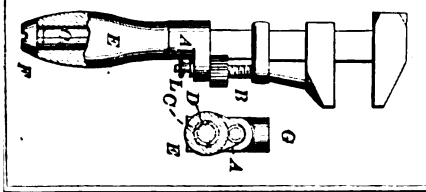

89701—D. F Sweet—*Heat Radiator.*

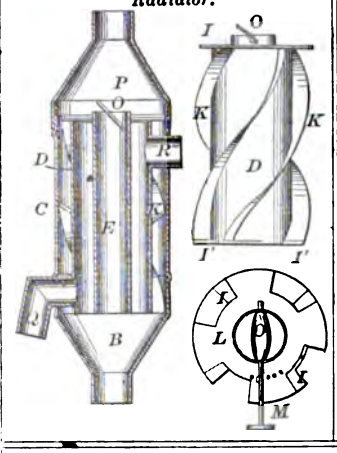

89706—J. B. Terry—*Steam Heating.*

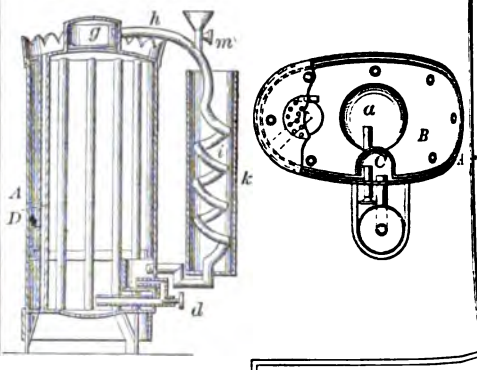

89705—L. Z. Terrill—*Fire Arm.*

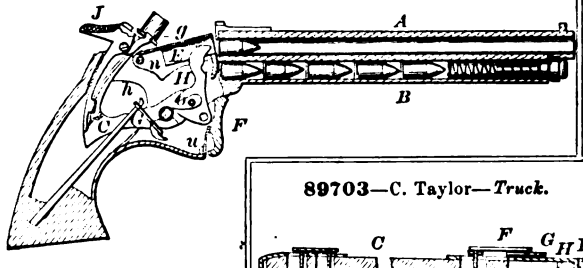

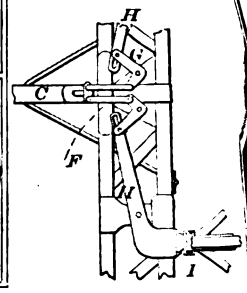

89703—C. Taylor—*Truck.*

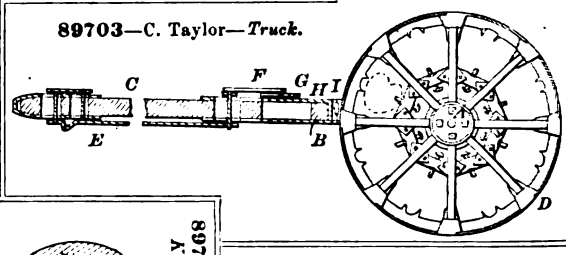

89707—G. W. Tucker—*Lamp Shade.*

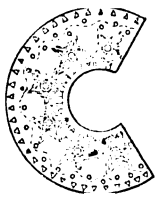

89708—H. B. Tuthill—*Attaching Knobs.*

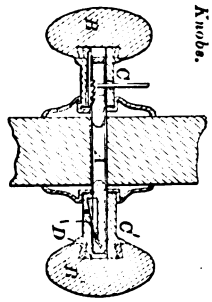

89710—M. Vandeusen—*Seed Sower and Harrow.*

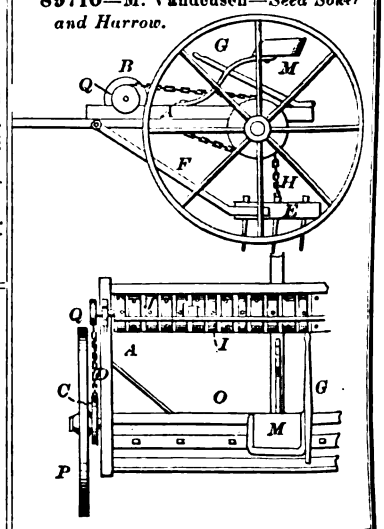

89711—J. D. Van Dusen—*Washing Machine.*

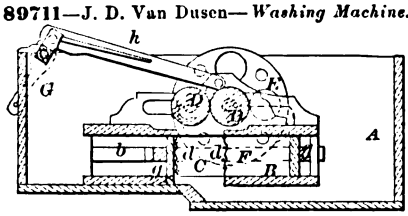

89712—H. Vansittart—*Screw Propeller.*

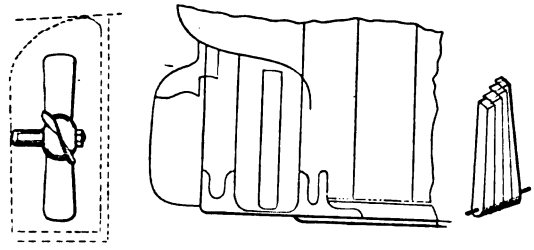

89713—J. Vatter—*Oven.*

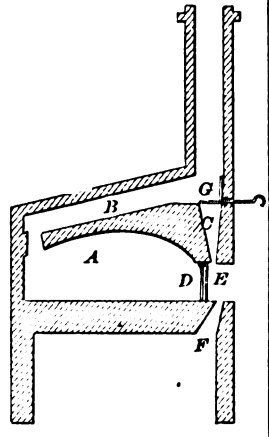

89714—W. W. Virdin—*Low Water Indicator.*

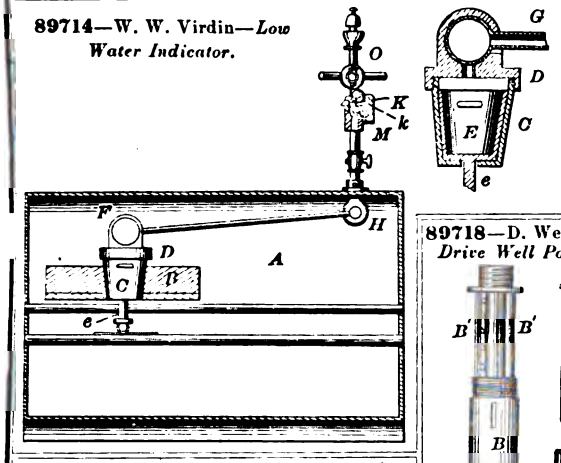

89718—D. Weaver—*Drive Well Point.*

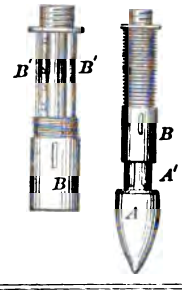

89719—H. J. Wickham—*Match Box.*

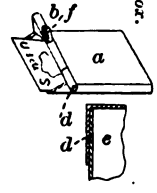

89716—J. J. Walker—*Cistern.*

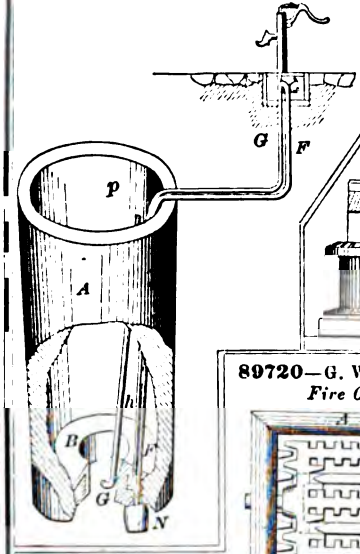

89717—P. M. Warren—*Steam Engineery.*

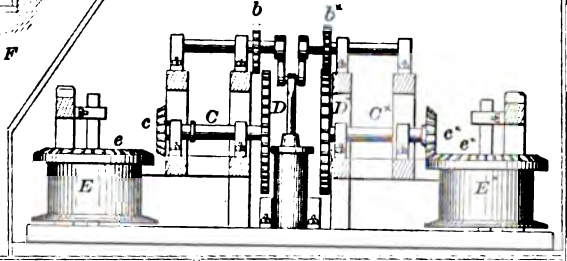

89720—G. Williamson—*Fire Grate*

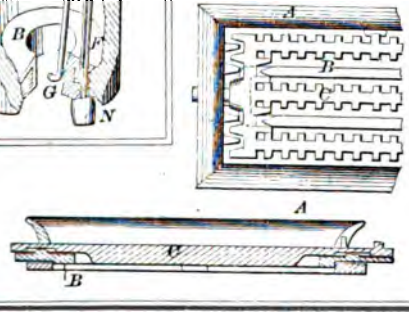

89721—J. Williams—*Mill Bush and Spindle.*

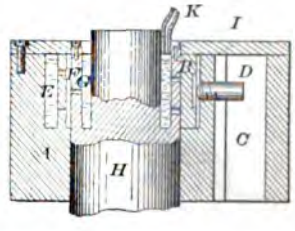

89722—A. J. Williams—*Pea Dropper.*

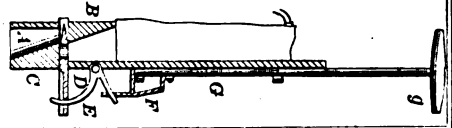

89723—R. A. York—*Lifting Jack and Wrench.*

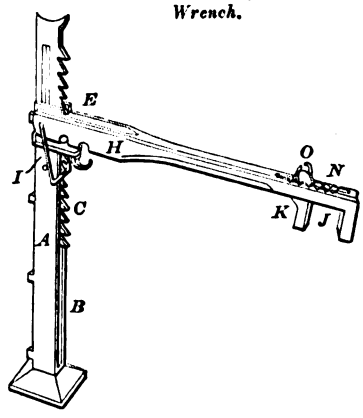

89724—Abbott, Harrison & Welch—*For Grinding Saws.*

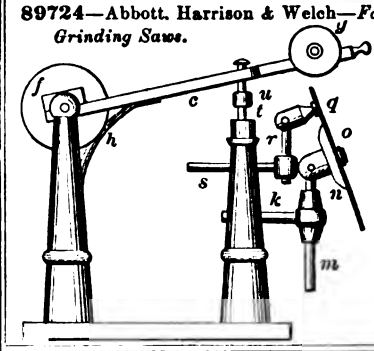

89725—T. Barfield—*For Preventing Incrustation in Boilers.*

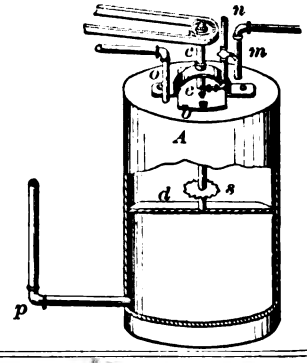

89726—C. R. Arnold—*Wash Boiler.*

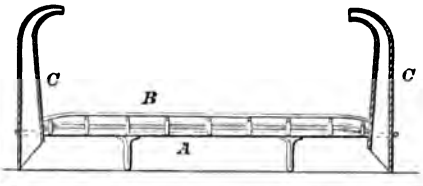

89729—Bell & Bronson—*Corn Cultivator.*

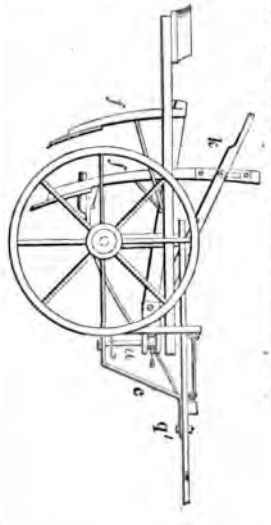

89728—H. Bean—*Seeding Machine.*

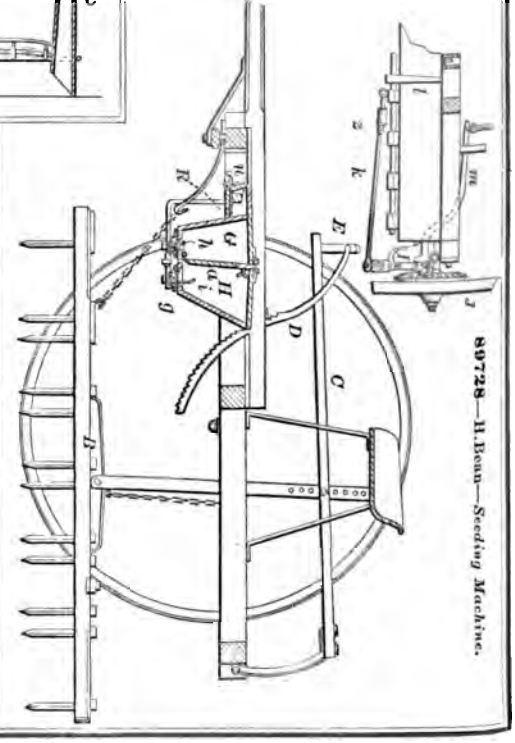

89739—G. H. Crocker—*Seed Sower.*

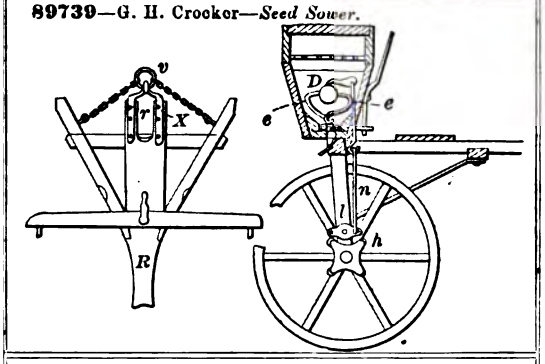

89740—J. Cyester—*Feather Renovator.*

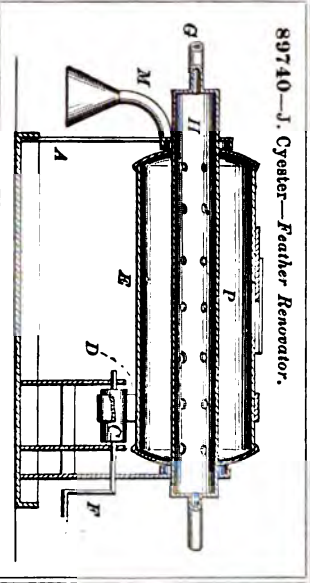

89742—Doddridge, Reitenour & Swhier—*Corn Dropper.*

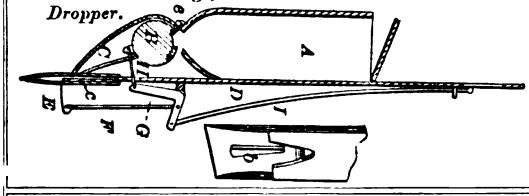

89741—A. Davis—*Sash Holder.*

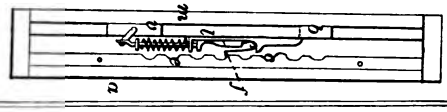

89743—J. G. Dreyfus—*Lamp Chimney Cap.*

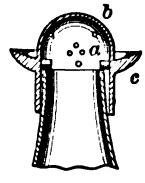

89744—L. E. Dugas—*Velocipede.*

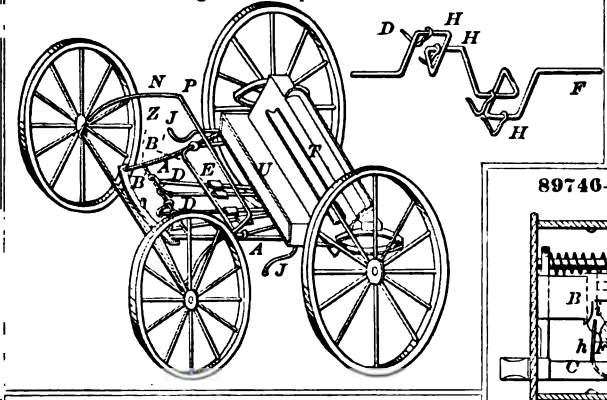

89746—J. Ebling—*Lock.*

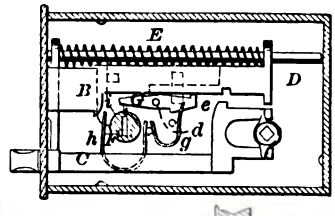

89745—J. B. Eads—*Bridge.*

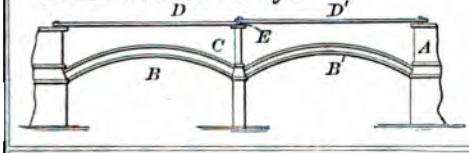

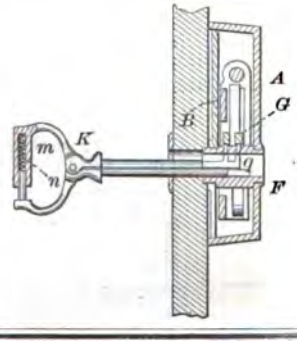

89747—H R. Ekegrén—*Stop Watch.*

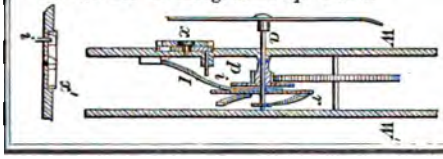

89732—H. Brackett—*Harvester Dropper.*

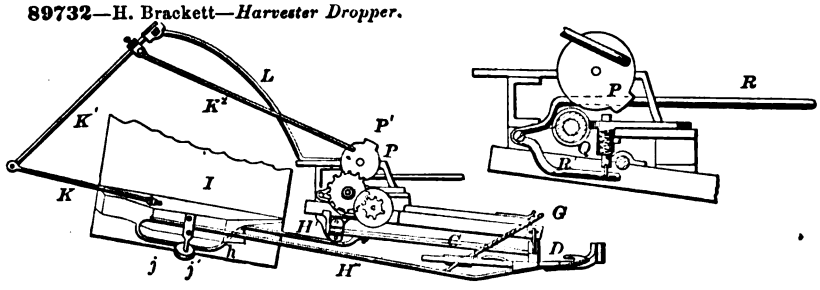

89733—H. Brackett—*Harvester Dropper.*

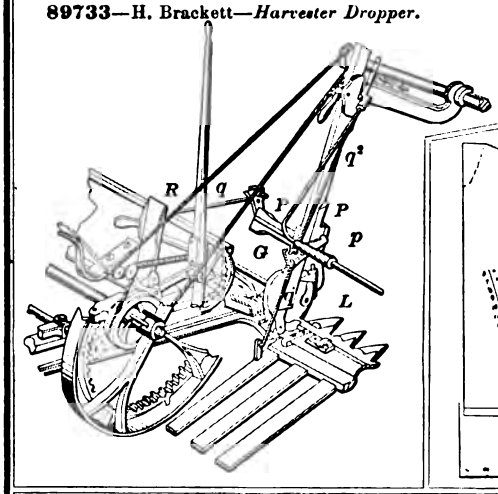

89735—H. M. Burrows—*For Patterns and Measuring for Ladies' Dresses.*

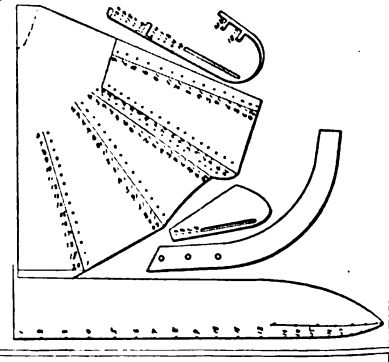

89734—J. M. Bryan—*Ore Concentrator.*

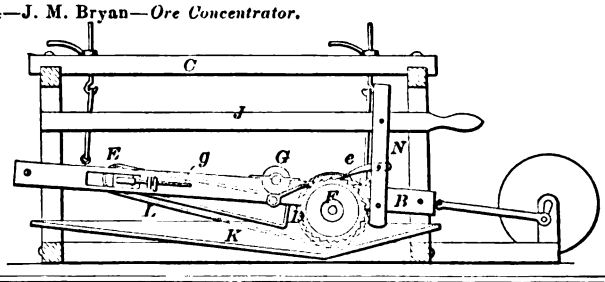

89736—W. Carr—*Spring Seat.*

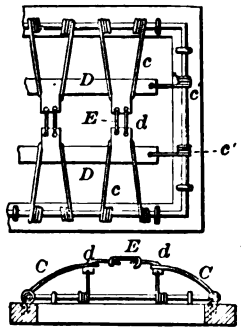

89737—J. Christie—*For Making Horse Shoes.*

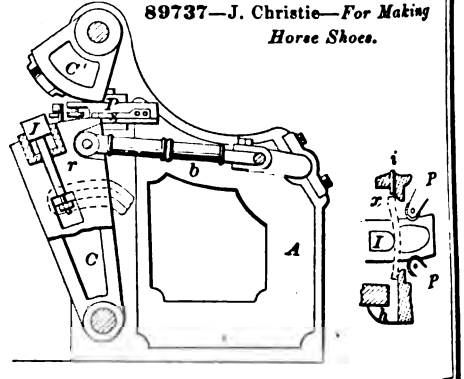

89758—S. L. Fremont—*For Changing Car Trucks.*

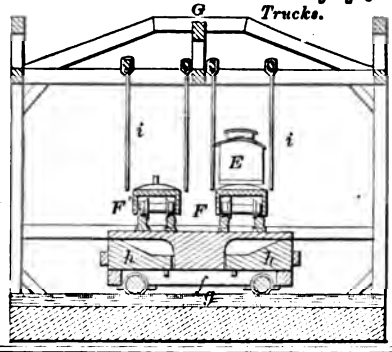

89759—J. W. Gosling—*Carriage Step and Wheel Fender.*

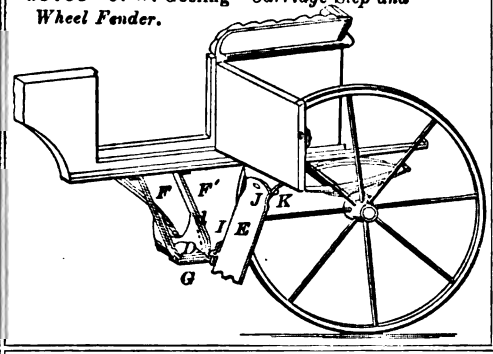

89760—C. J. Graf—*Chair.*

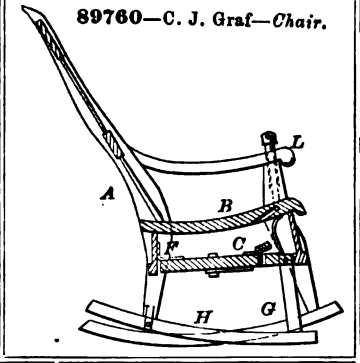

89761—A. Havens—*Washing Machine.*

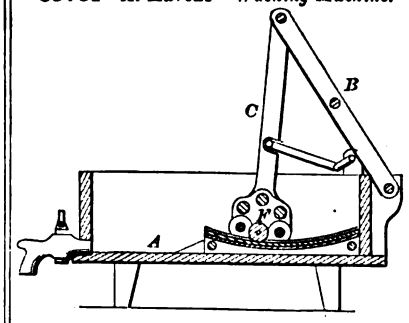

89762—E. Herbster—*Alarm Lock.*

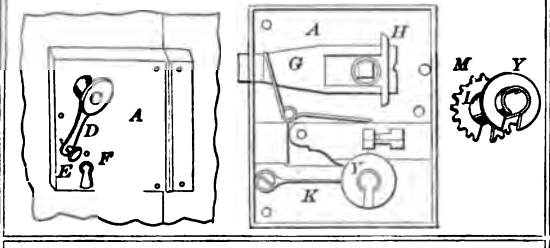

89763—C. Hewitt—*Pile for Beams.*

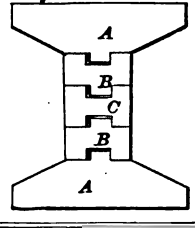

89764—W. Heylman—*For Bending Plow Handles.*

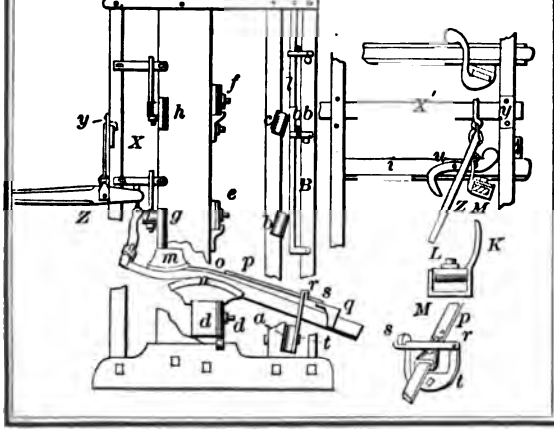

89765—A. Hitchcock—*Rock Breaker.*

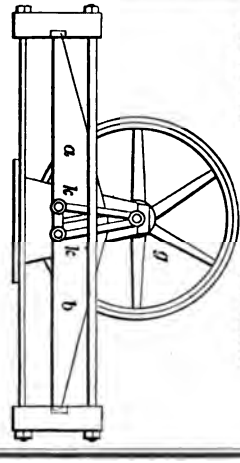

89749—C. L. Fleischmann—*Distilling Apparatus.*

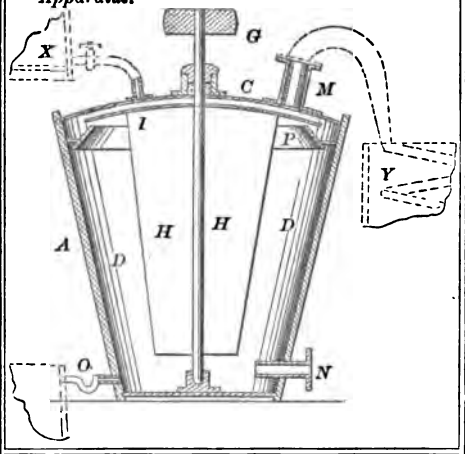

89751—C. L. Fleischmann—*Cotton Gin.*

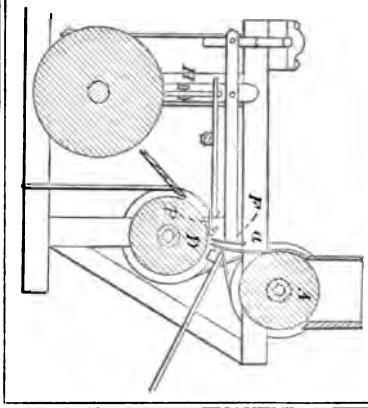

89753—M. B. Foote—*Lock.*

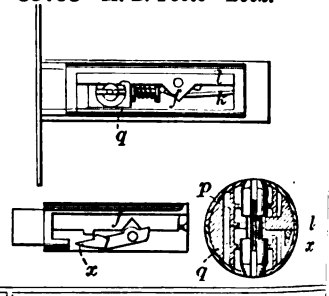

89755—D. P. Foster—*Bit Stock.*

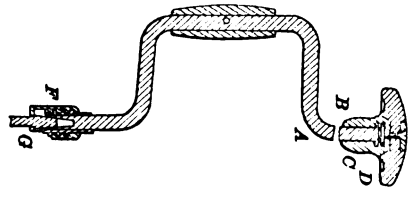

89754—P. S. Foster—*Edge-Plane for Boots and Shoes.*

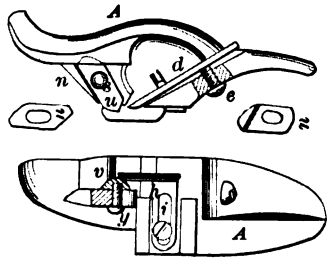

89752—A. C. Fletcher—*Car Wheel.*

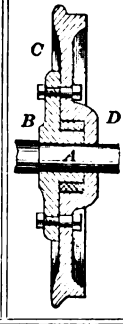

89757—Fournier & Lemaire—*Temperature Alarm.*

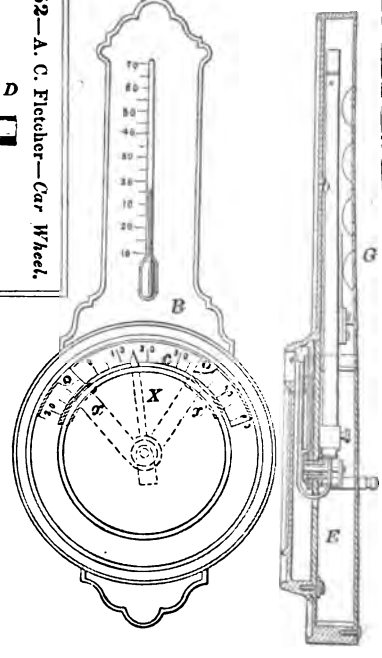

89756—G. A. Fountain—*Refrigerator.*

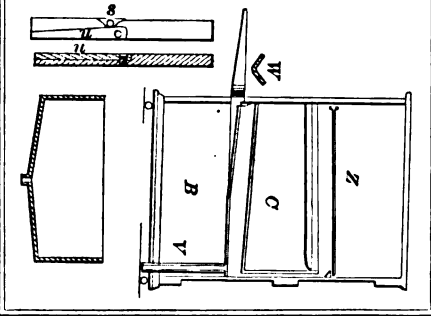

89776—W. B. Jones—*Sofa, Lounge and Table.*

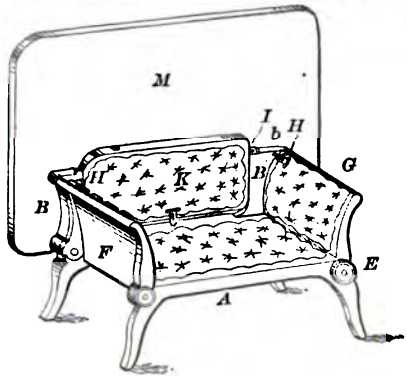

89777—A. C. Loud—*Propeller.*

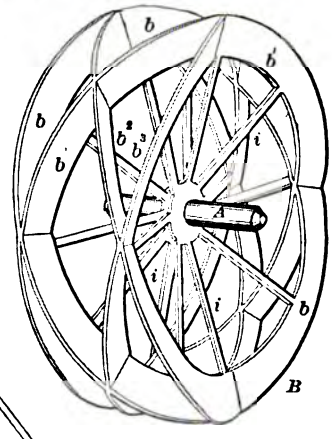

89778—W. Lowden—*Scythe*

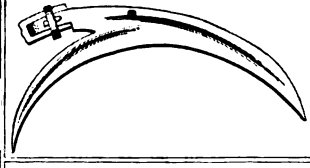

89779—S. Macferran—*Seat.*

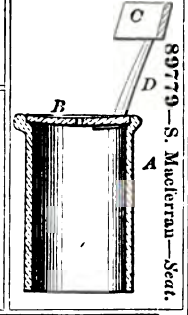

89780—J. A. Marden—*Governor.*

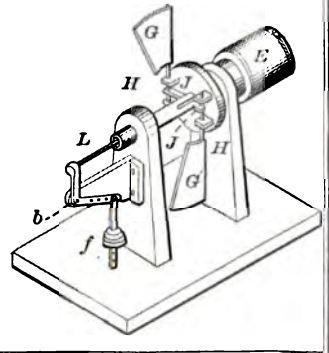

89781—B. G. Martin—*Stop Valve*

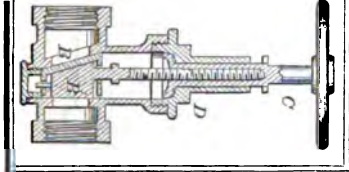

89782—E. May—*Fireproof Building.*

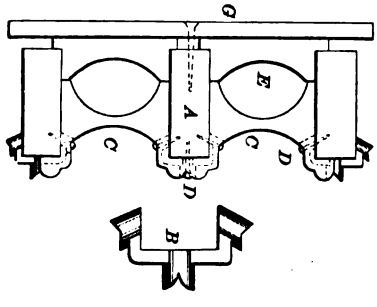

89783—S. T. McDougall—*Velocipede.*

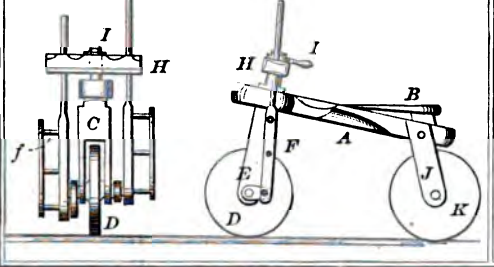

89784—F. W. Miller—*Wash Boiler.*

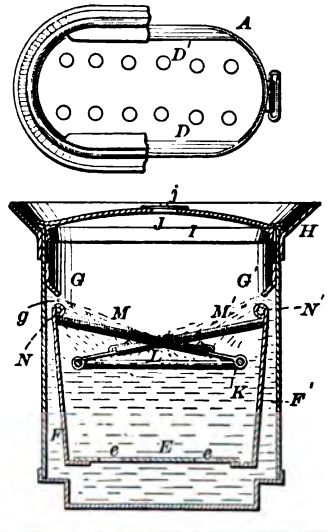

89766—C. Hofmann—*Paper Machine.*

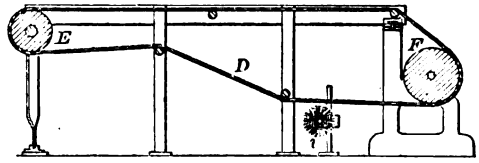

89767—D. B. Hunt—*Car Axle.*

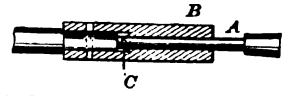

89769—S. T. Hyde—*Hedge Trimmer.*

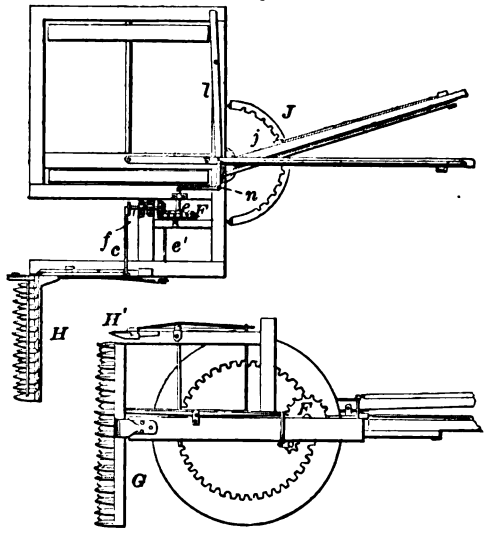

89770—J. H. Irwin—*Lantern.*

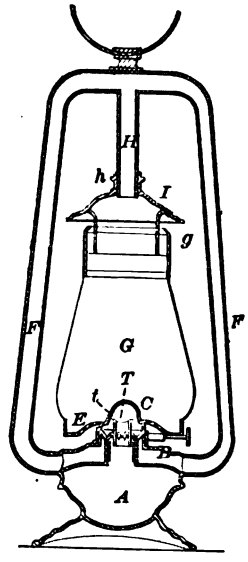

89771—J. W. Jarboe—*Coal Scuttle.*

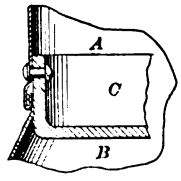

89773—W. S. Jessup—*Trunk Clamp.*

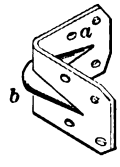

89774—J. Johnson—*Horse Shoe.*

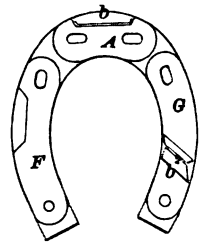

89772—E. Jennings, Jr.—*Suspenders.*

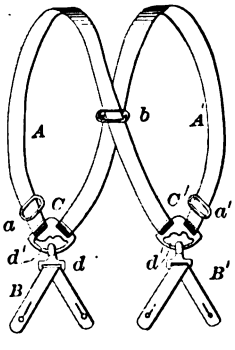

89775—J. Johnson—*Horse Shoe.*

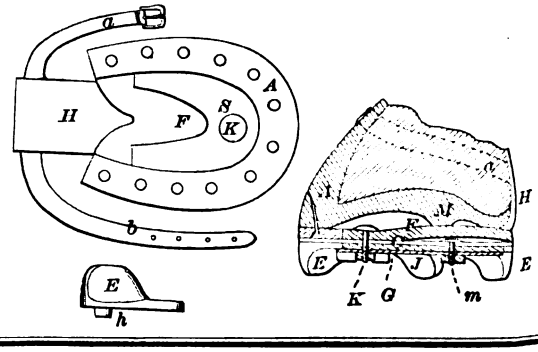

89793—L. D. & C. C. Roberts—*Coal Chute.*

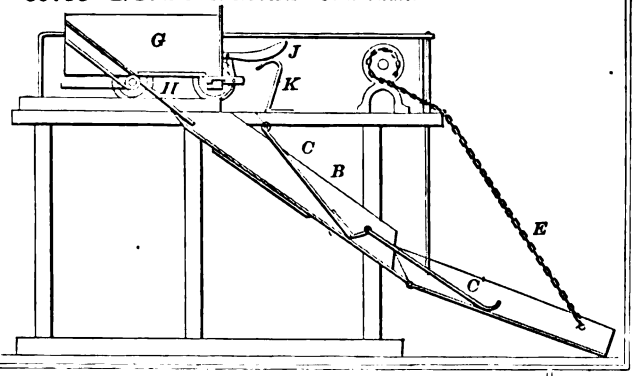

89794—T. F. Rowland—*Drilling Apparatus.*

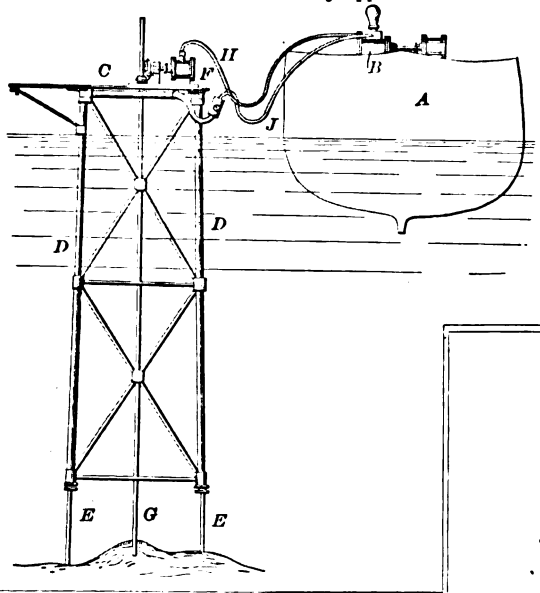

89797—G. & J. Seibert—*Plow.*

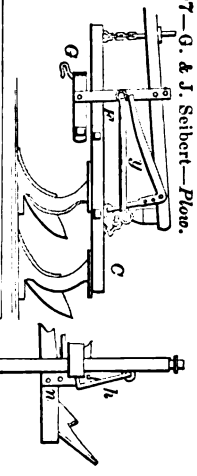

89795—F. Saunders—*Lamp.*

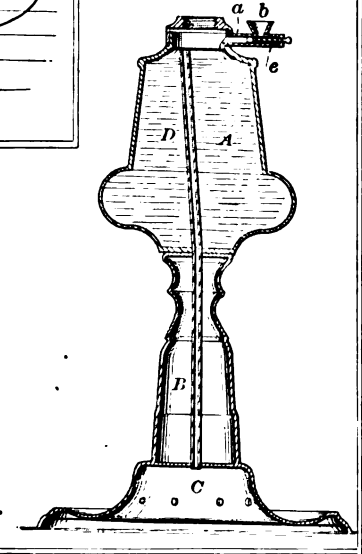

89798—J. B. Sias—*For Skiving and Channeling Soles.*

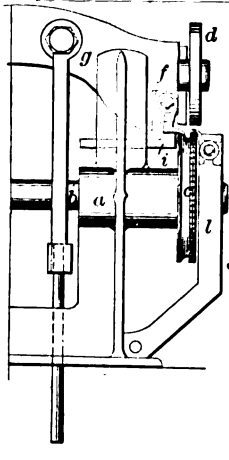

89796—I. & H. H. Scoville—*Plow.*

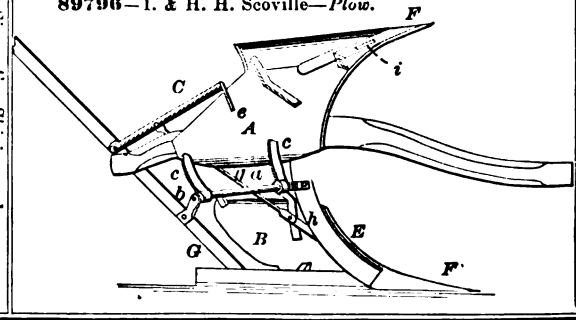

89785—W. Miller—*Weather Strip.*

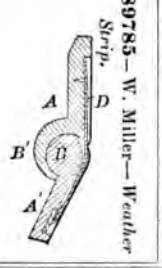

89786—J H. Mills—*Steam Generator.*

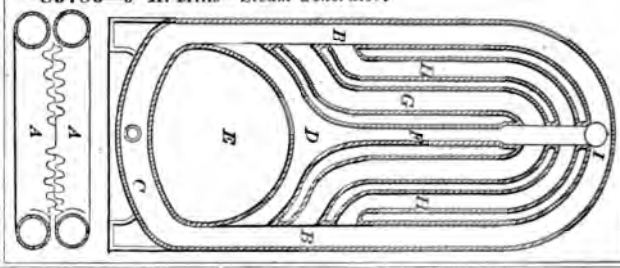

89787—Mundy & Hoffman—*Meat Cutter.*

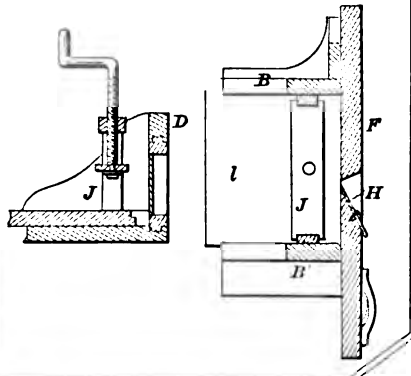

89789—A. W. Pratt—*For Buffing Whitening, Polishing and Stoning Leather.*

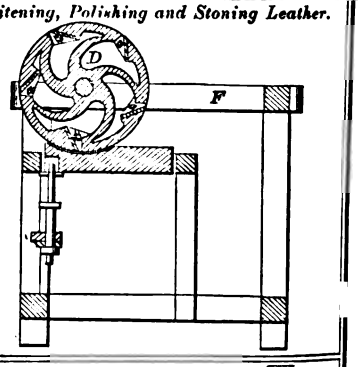

89788—M Murphy—*Gang Plow.*

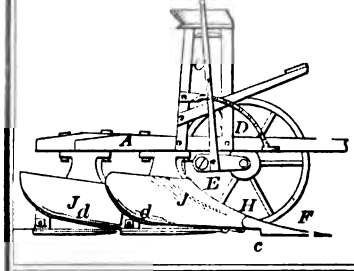

89790—N. Purdy—*Wood Bending Machine.*

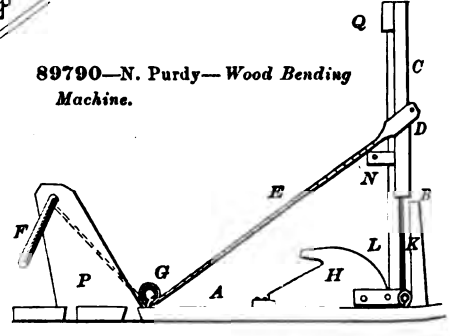

89792—A. Rank—*Harvester Dropper.*

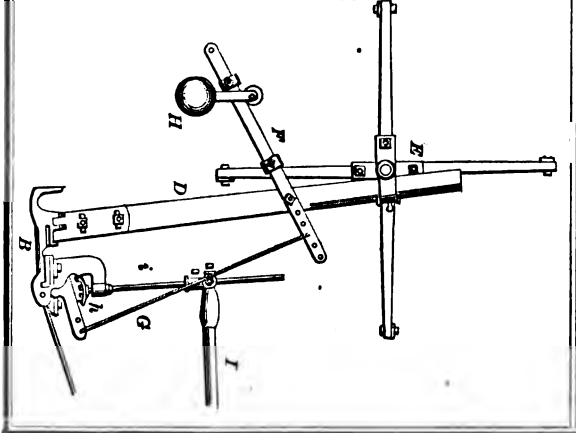

89791—J. A. Quick—*Cultivator.*

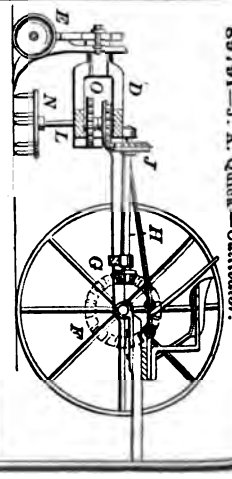

89808—H. A. Streeter—*Horse Rake.*

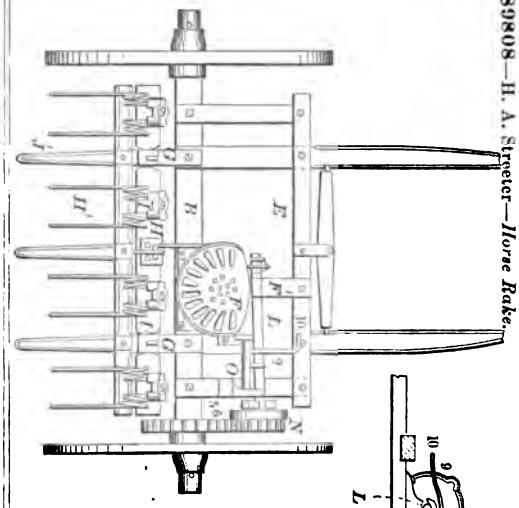

89806—*Continued.*

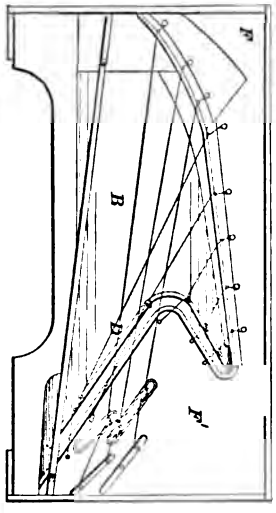

89807—A. Stockwell—*Spinning Mule.*

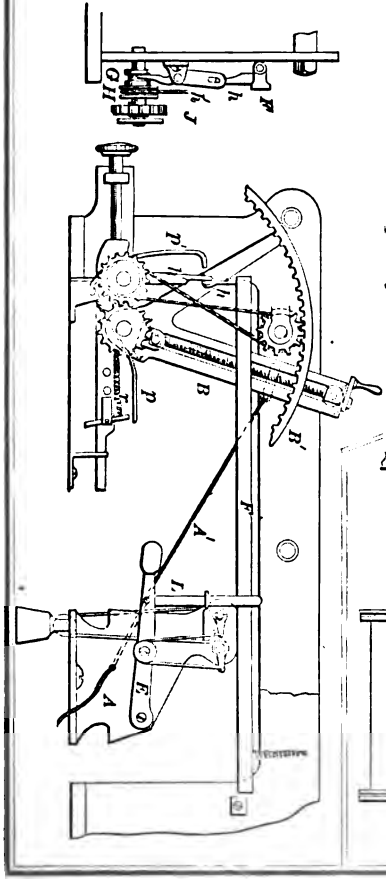

89809—J. S. Stuart—*Locomotive.*

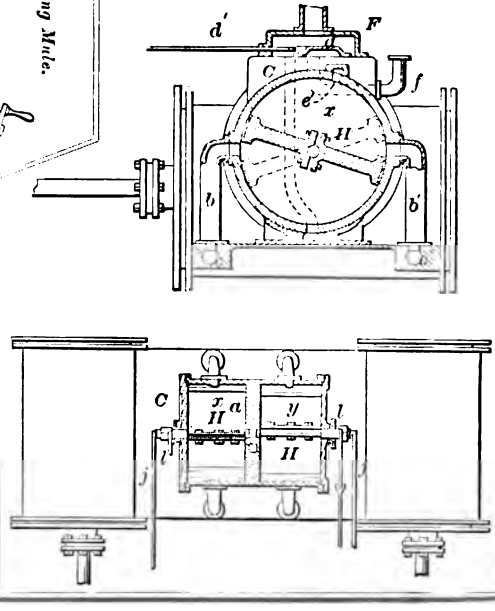

89799—W. J. Simmons—*Quilting Frame.*

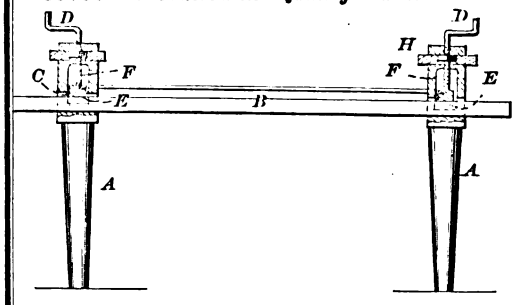

89800—A. Smith—*For Desiccating Fertilizers.*

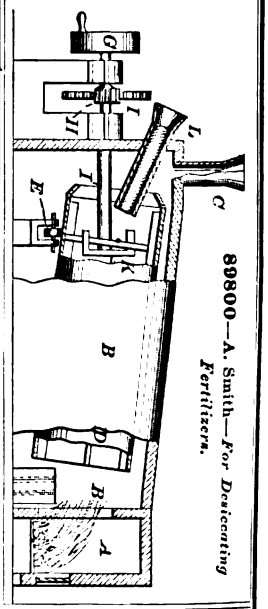

89801—P. Sprague—*Cultivator.*

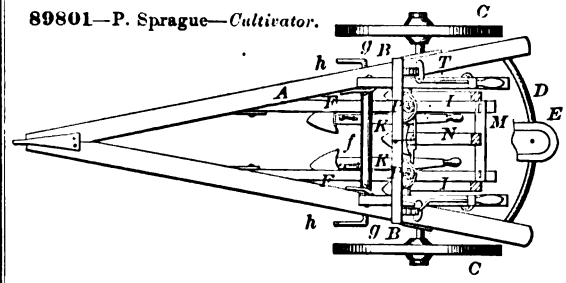

89802—T. G. Springer—*Producing Gas for Heating and Lighting.*

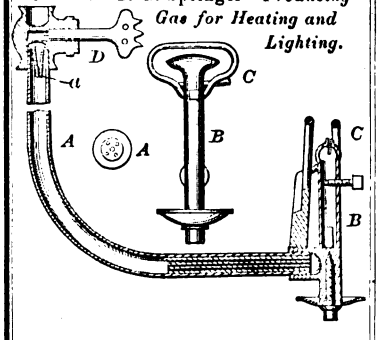

89803—G. Stackpole—*Mop Holder.*

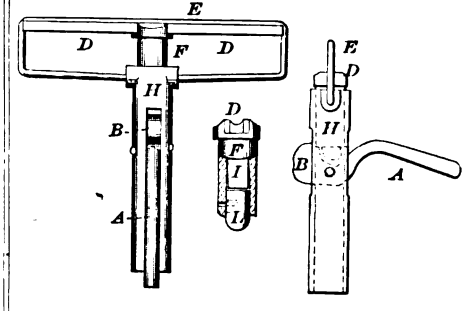

89804—E. T. Starr—*Skate.*

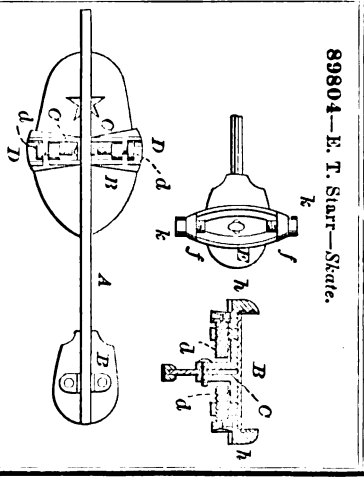

89806—D. Stirn—*Piano Forte.*

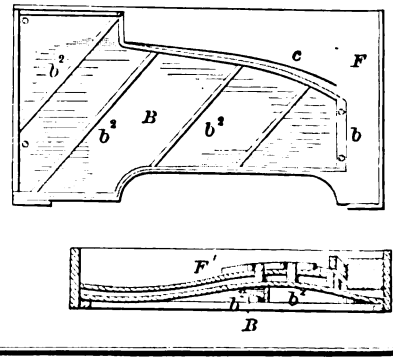

89806—*Continued.*

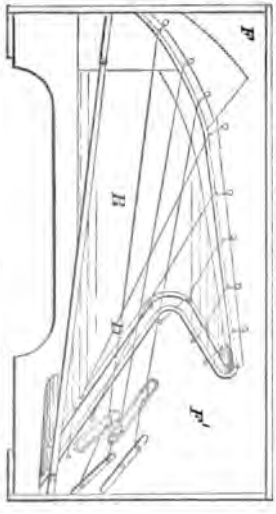

89808—H. A. Streeter—*Horse Rake.*

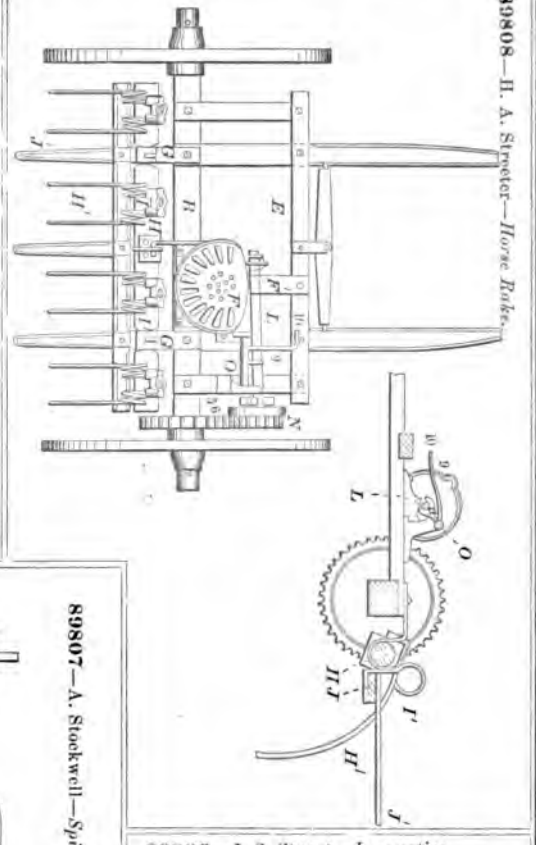

89807—A. Stockwell—*Spinning Mule.*

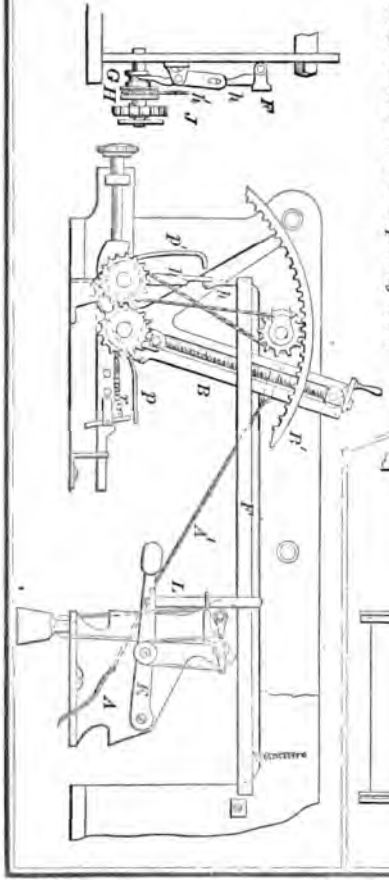

89809—J. S. Stuart—*Locomotive.*

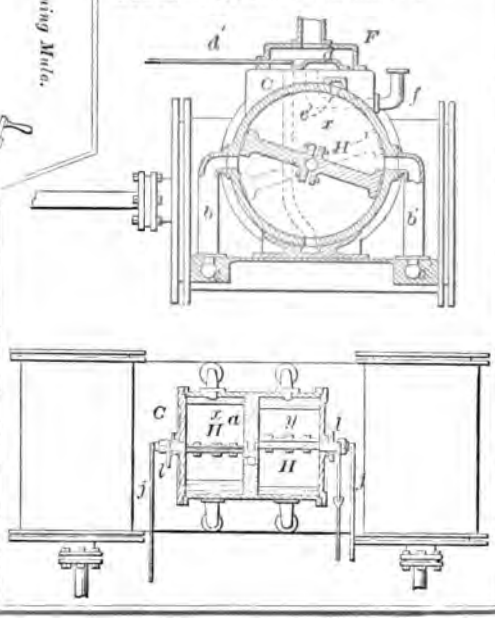

89810—J. B. Sweetland—*Horse Hay Fork.*

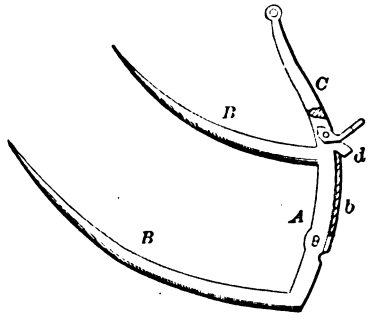

89811—F. A. Taber—*Candlestick*

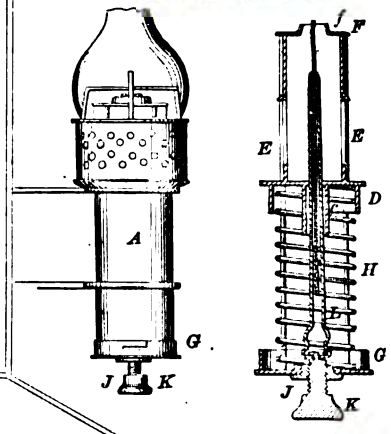

89812—A. L. Taveau—*Harrow and Seeder.*

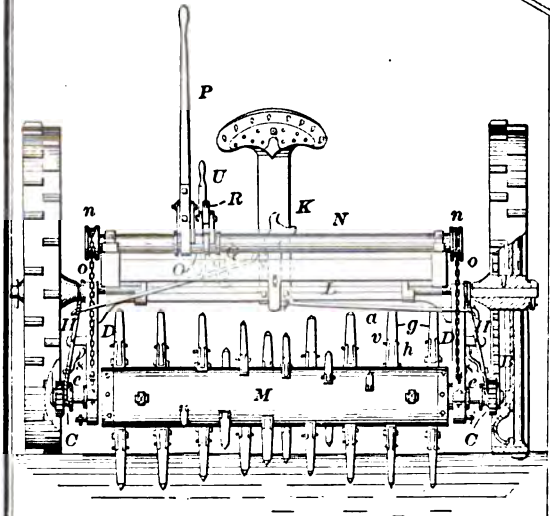

89813—J. I. Tay—*For Hanging Window Shades.*

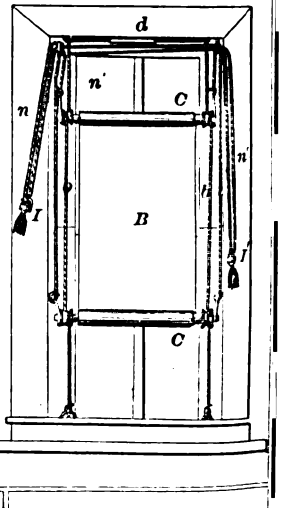

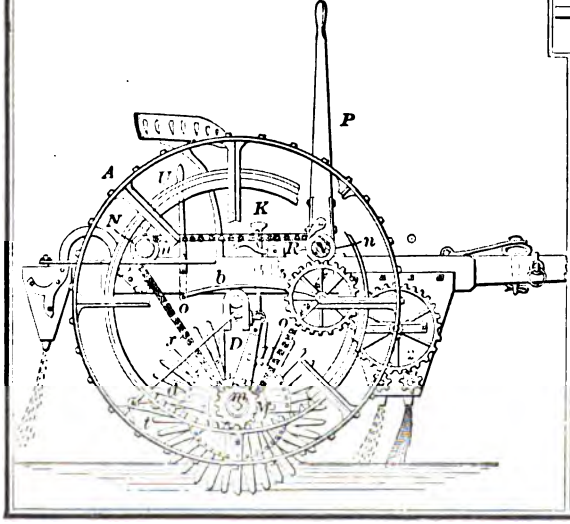

89814—A. M Utley—*Cheese Table, Shelving, &c.*

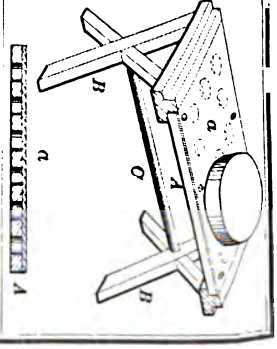

89815—J. Van—*Laundry.*

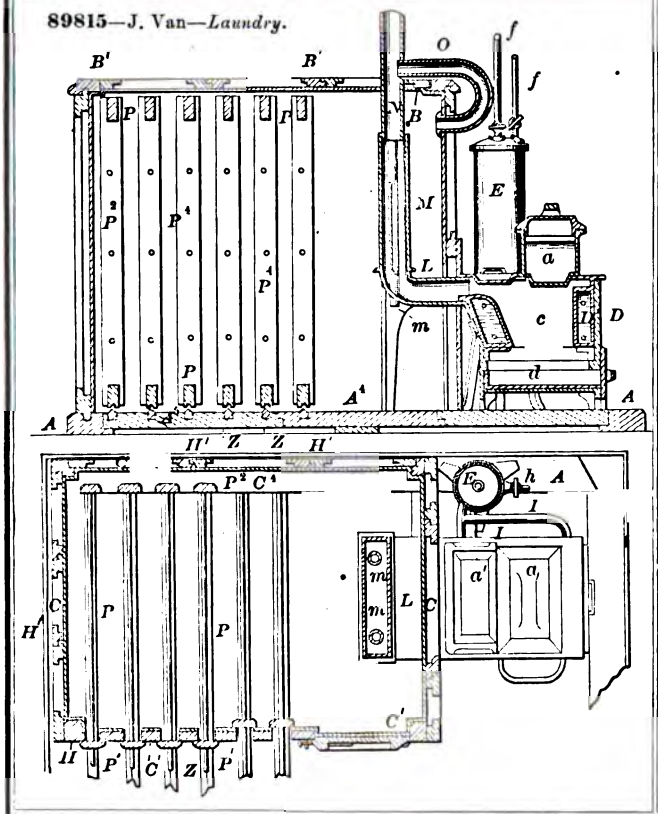

89816—F. Vié—*Boat.*

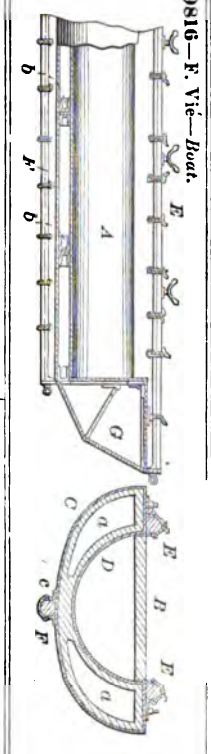

89817—E. Vorbe—*Lock.*

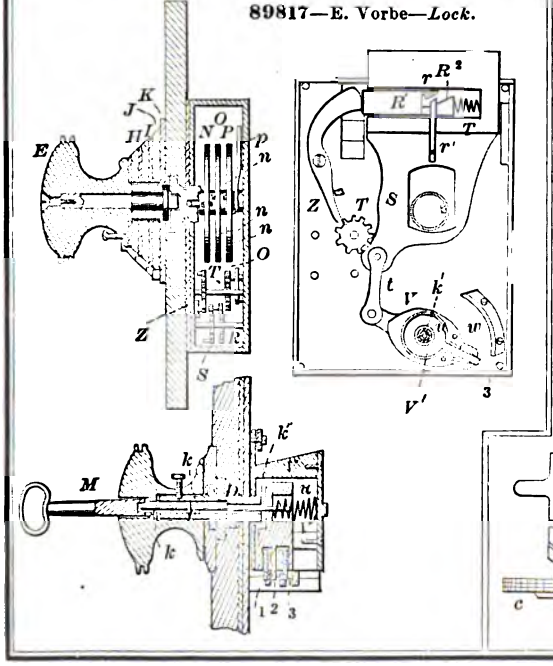

89818—H. S. Vrooman—*Sole Channeling and Feather Edging Machine.*

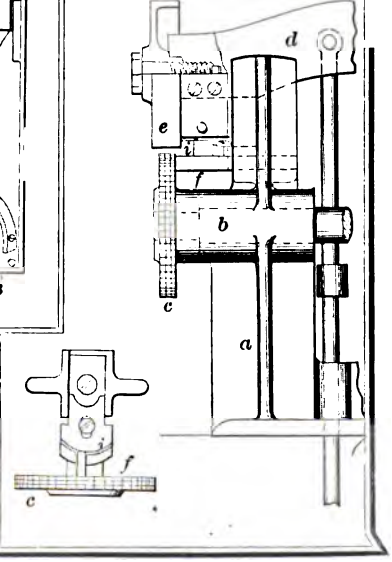

89819—S. Wagner—*Door Catch and Cushion.*

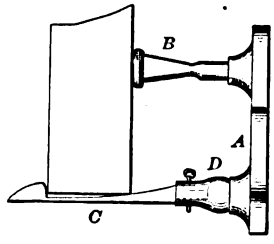

89821—P. A. Willson—*Sash Balance.*

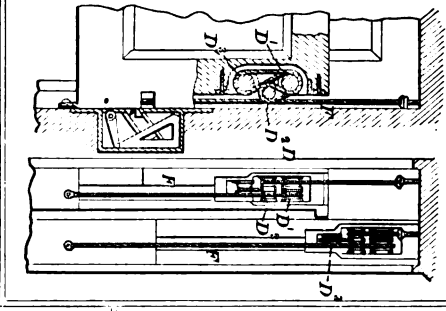

89822—S. Wilmarth—*Velocipede.*

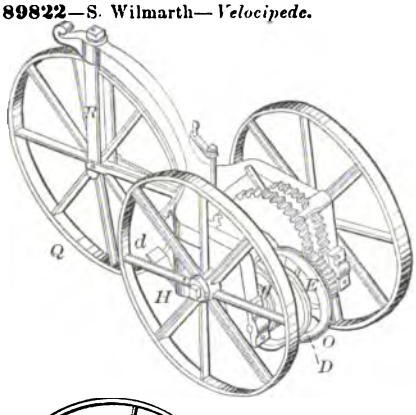

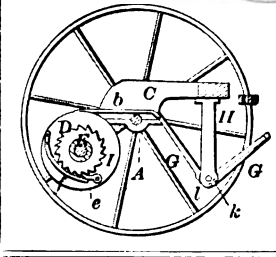

89823—A. Winship—*Tire Upsetting Machine.*

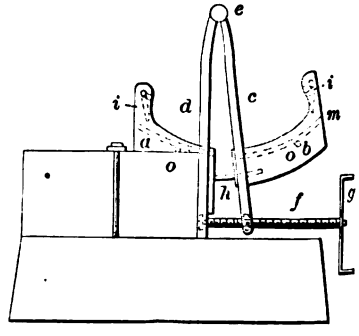

89820—B. P. Walker—*Belt Joint.*

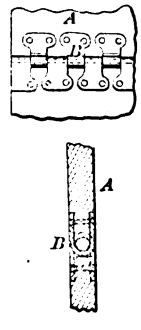

89825—J. M. Albertson—*Horse Power.*

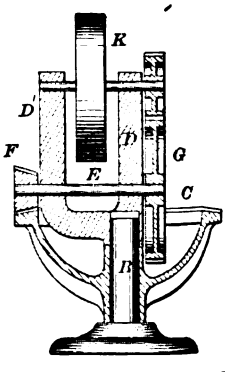

89824—R. Wright—*For Cutting Stalks.*

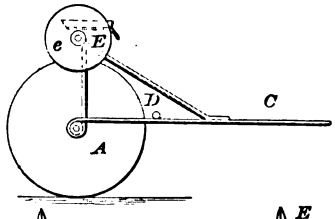

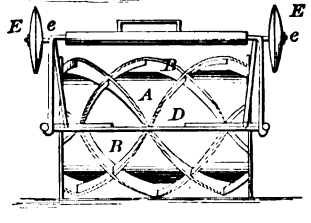

89826—H. L. Arnold—*Letter Lock.*

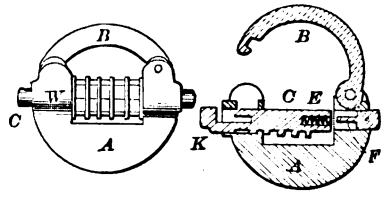

89827—Badlam & Lang—*Foot Rest.*

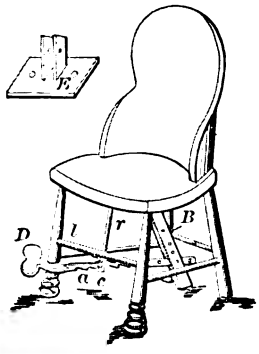

89828—J. Chapin—*Ticket Punch.*

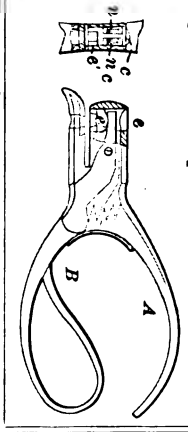

89829—J. W. Dodge—*Branding Apparatus.*

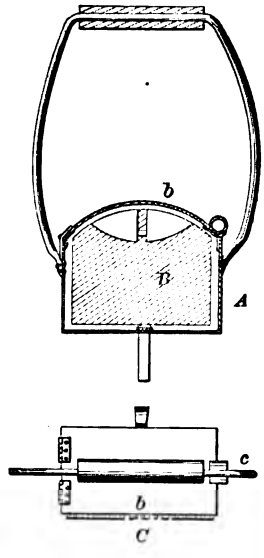

89830—L. M. Ham—*Prison Door Lock.*

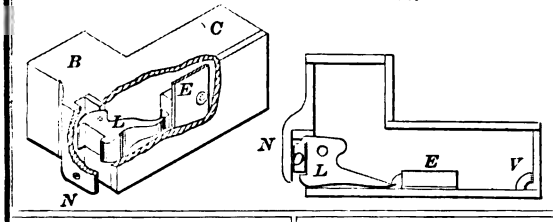

89831—W. Hoffman—*For Rolling and Notching Railroad Rails.*

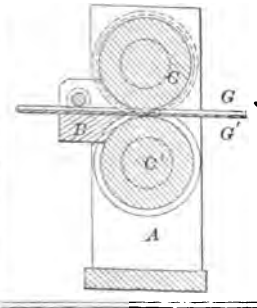

89832—B. Kindblade—*Sash Holder.*

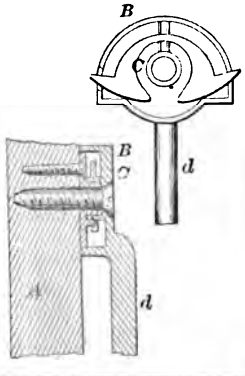

89834—G. C. Howard—*Hut Press.*

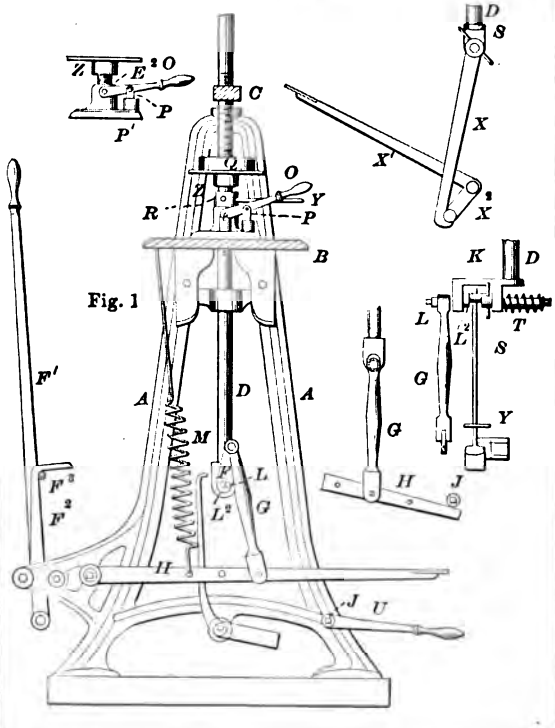

Fig. 1

89833—T. L. Luders—*Skate.*

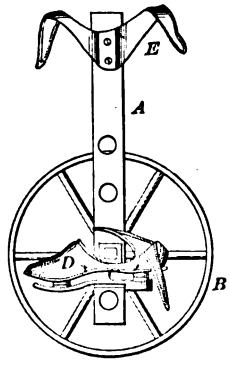

89837—Z. Walsh—*Lock.*

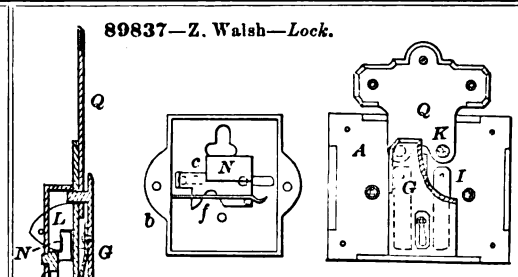

89838—J. Weaver, Jr.—*Washing Machine.*

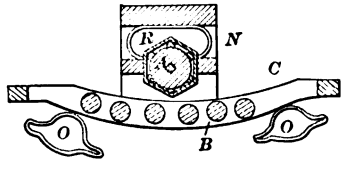

89835—V. Price—*Carriage Wheel.*

89836—W. M. K. Thornton—*Buckle.*

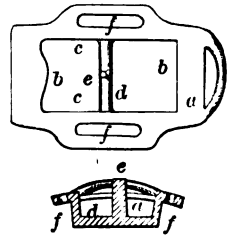

89841—T. Atkinson—*Beehive.*

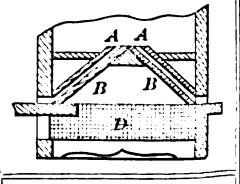

89840—G. Adams, Jr.—*Scaffold.*

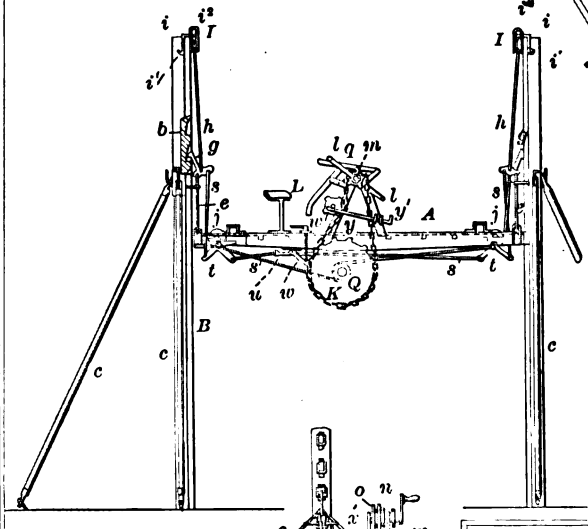

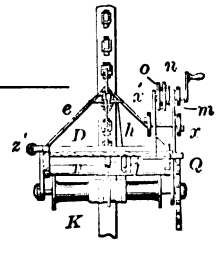

89839—R. Sibley—*Journal Box.*

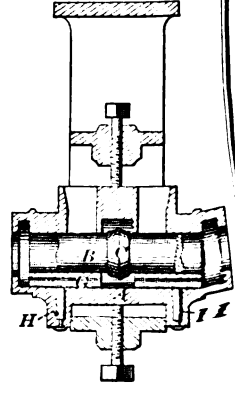

89842—I. W. Barnum—*Tuck Creaser.*

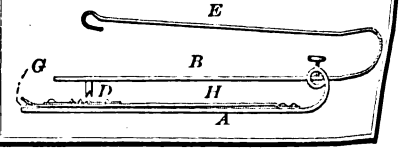

89843—E. Barto—*Corn Marker, Planter and Cultivator.*

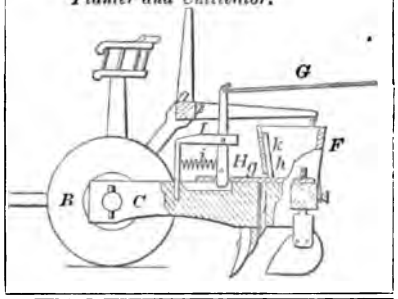

89844—G. N. Beard
Cotton Bale Tie.

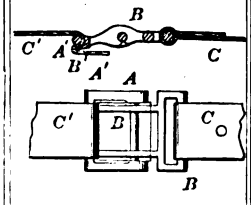

89845—L. R. Boyd—*Cap for Jars.*

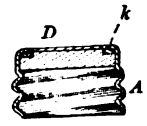

89846—H. R. Bozorth—*Refrigerator.*

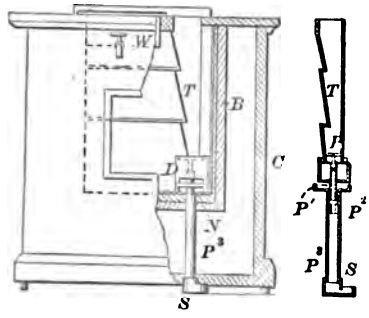

89848—J. G. Breslin—*Spark Conveyor.*

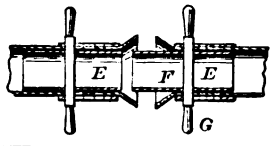

89849—S. Brillinger—*Pump.*

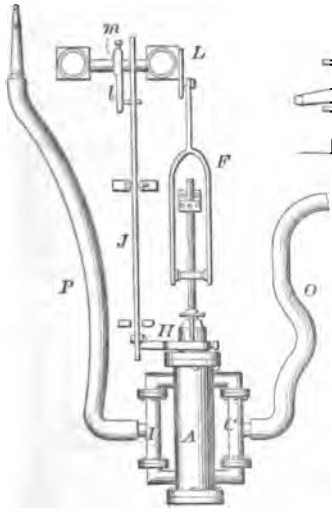

89850—D. L. Cady—*Sheep Shearing Table.*

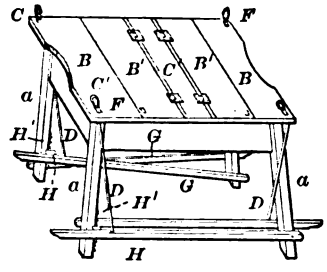

89851—W. Churchill—*Punching Machine.*

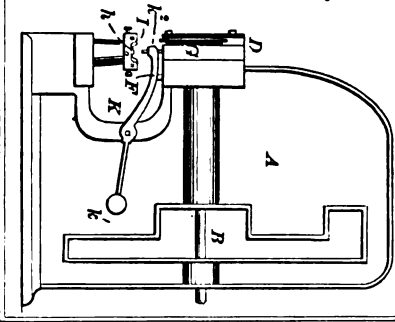

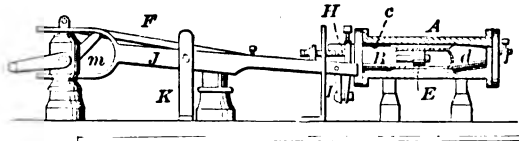

89852—G. W. Cilley—*Lock and Latch.*

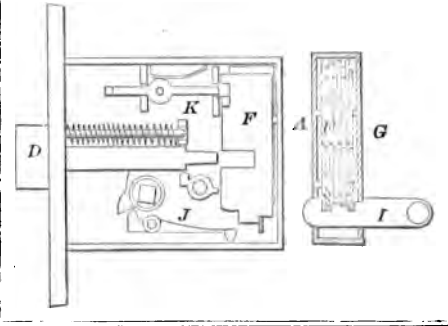

89853—G. W. Cilley—*Lock and Latch.*

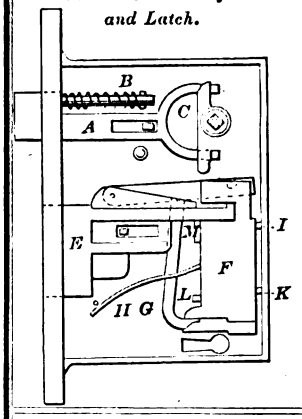

89854—I. W. Clarke—*For Doubling Yarn.*

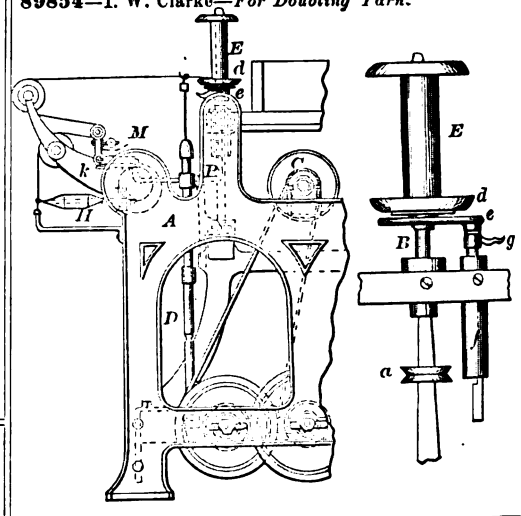

89855—A. Couturier—*Vegetable Fibre to Imitate Hair.*

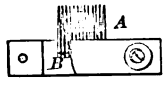

89856—H. H. Craigie—*Cock for Water Closets.*

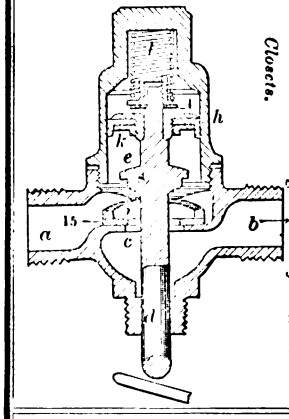

89857—H. H. Craigie—*Water Closet.*

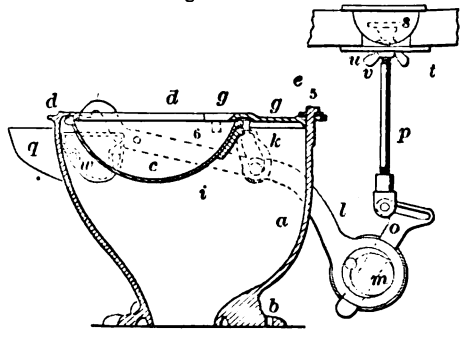

89858—H. H. Craigie—*Waste Trap for Wash Basins.*

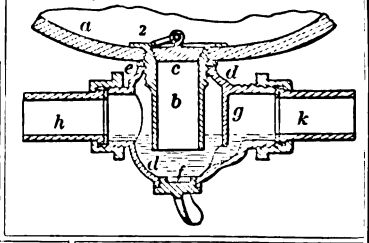

89859—H. H. Craigie—*Water Closet.*

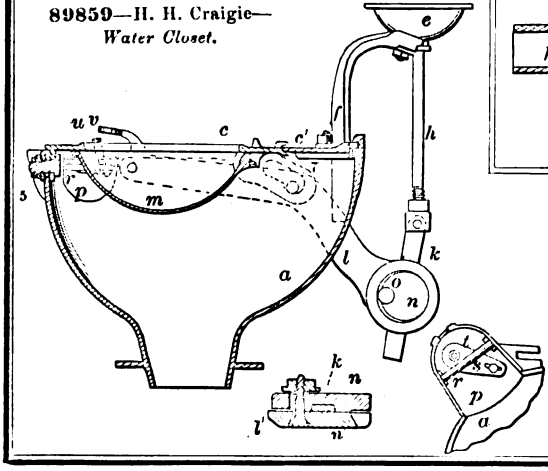

89860—H. A. Crossley—*Stave Jointer.*

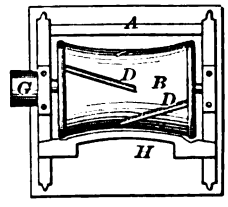

89861—W. Doyle—*Stove Lid and Damper.*

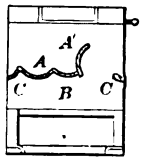

89862—J. G. Dyer—*Weighing Scale.*

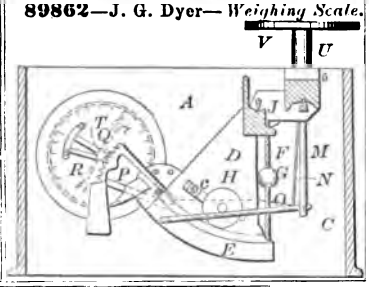

89864—A. Hasbrouck—

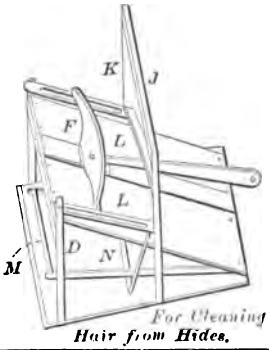

For Cleaning Hair from Hides.

89865—J. W. & R. Hewitt—*Lubricator.*

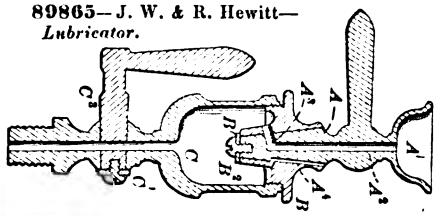

89863—W. Hailes—*Stove Grate.*

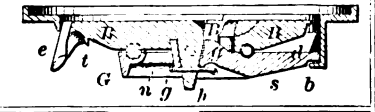

89866—P. L. Higley—*For Moulding Disks, Rivets, &c.*

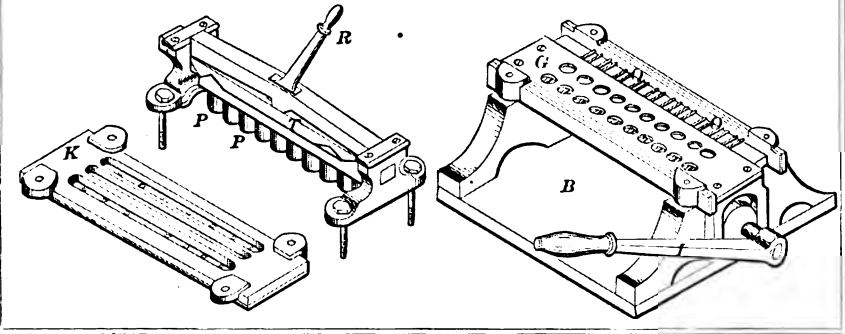

89867—S. Hull—*Harvester Rake.*

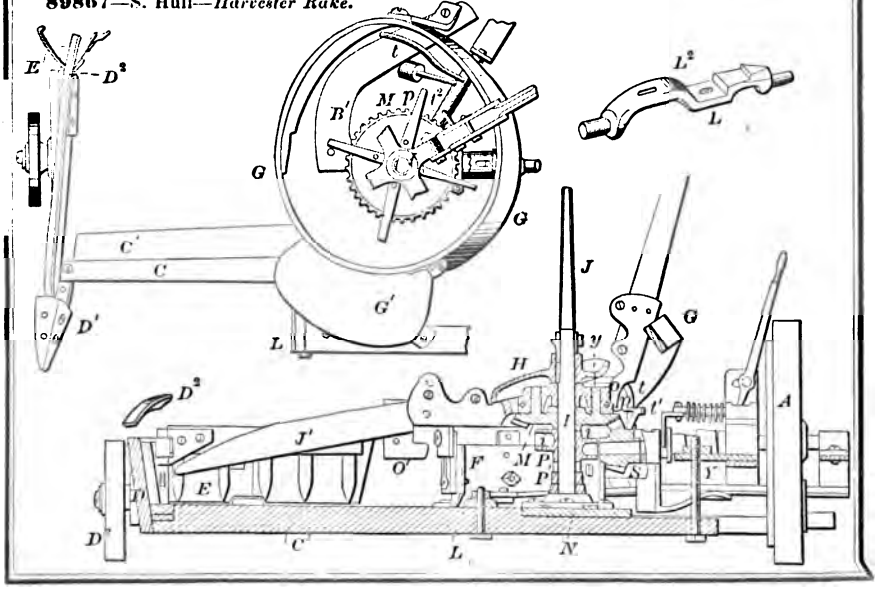

89868—L. J. Johnson—*Bedstead.*

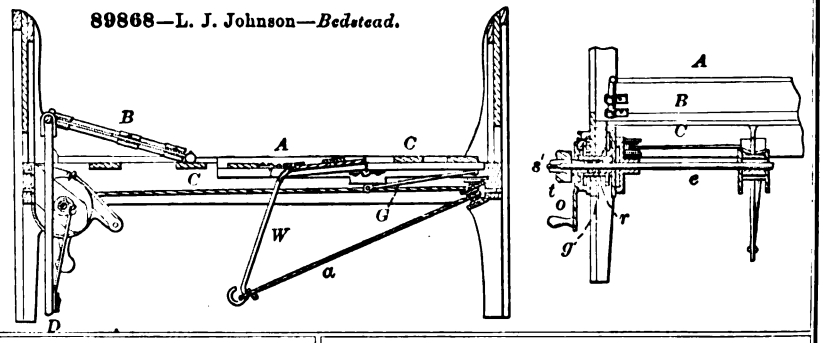

89870—G. King—*Clothes Dryer.*

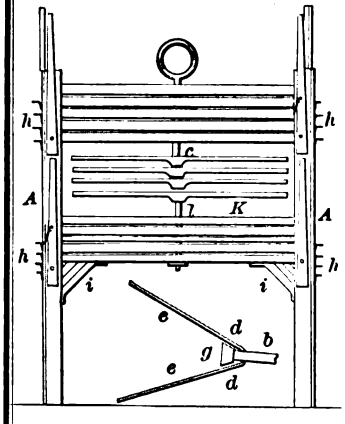

89869—R. Kent—*Die for Drawing and Reducing Wire.*

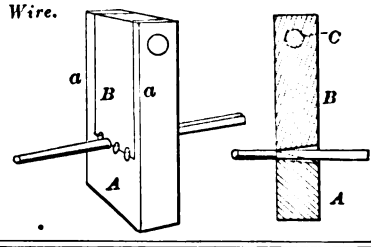

89873—Leman & Beals—*Vegetable Slicer.*

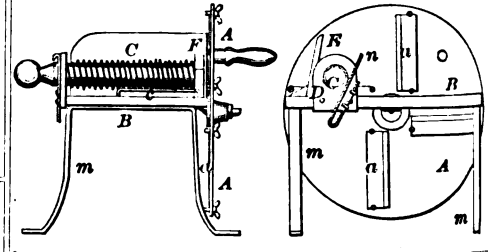

89871—E. M. Lang—*Lantern.*

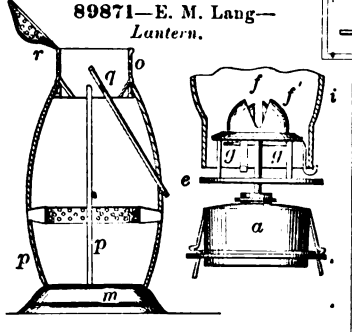

89872—H. B. Leach—*Suspender and Shoulder Brace.*

Fig. 4

Fig. 5

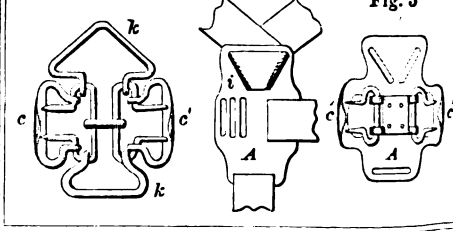

89874—J. McAuliffe—*Umbrella.*

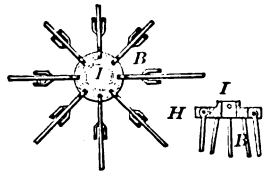

89875—J. L. McAlemy—*Truss.*

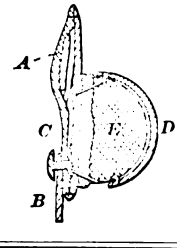

89877—R. R. McDonald—*Shoe Knife and Gauge.*

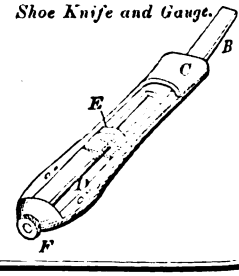

89878—J. C. McKenzie—*Tile Machine.*

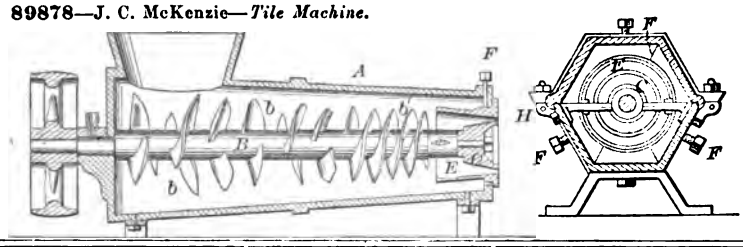

89879—S. M. Meyenberg—*Vail Holder.*

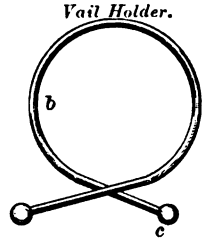

89880—G. Moody—*Stove Grate.*

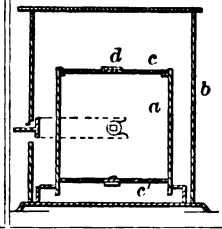

89883—G. W. Nell—*Curtain Fixture.*

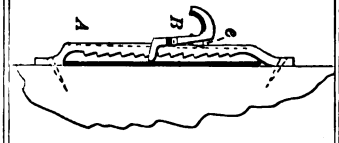

89886—E. Parker—*Key.*

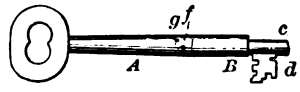

89882—W. H. Nauman—*Seed Drill.*

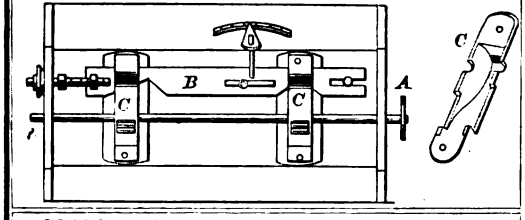

89884—R. Norris, Jr.—*For Hardening and Washing "Ransome Concrete Stone."*

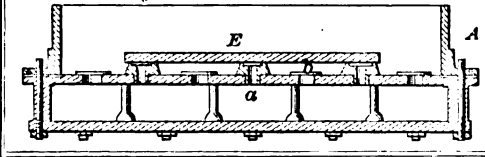

89890—C. G. Sargent—*Cotton Gin.*

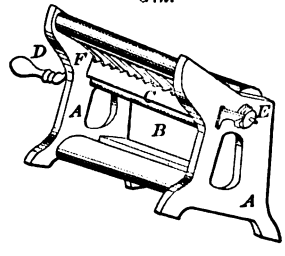

89885—D. C. Owen—*Pump*

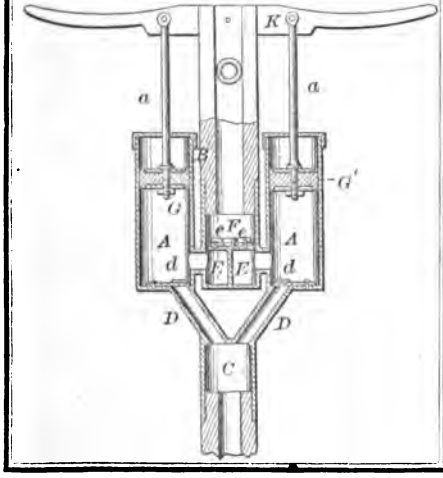

89888—J. Reynolds—*Grate Bar.*

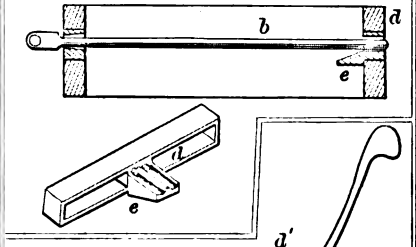

89889—W. Richards—*Fire Arm.*

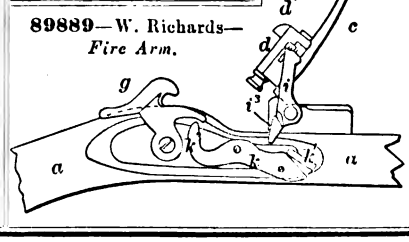

89887—G. M. Phelps—*Printing Telegraph.*

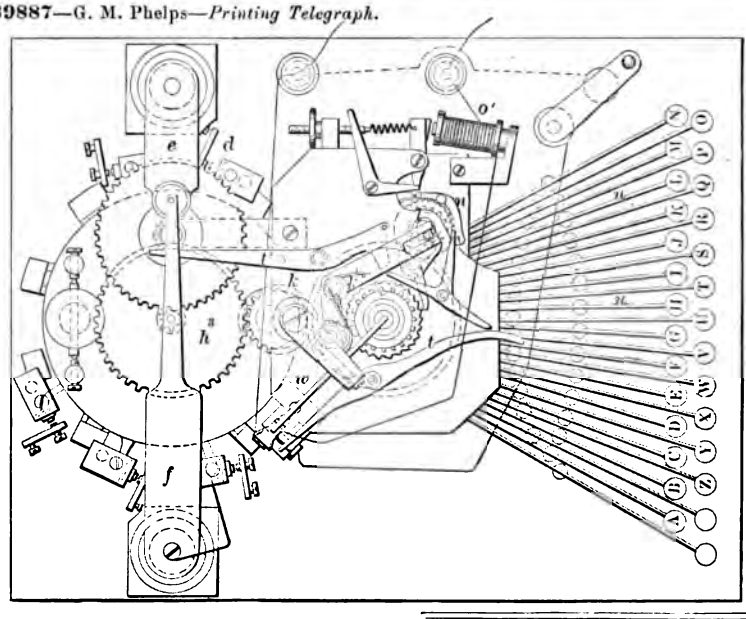

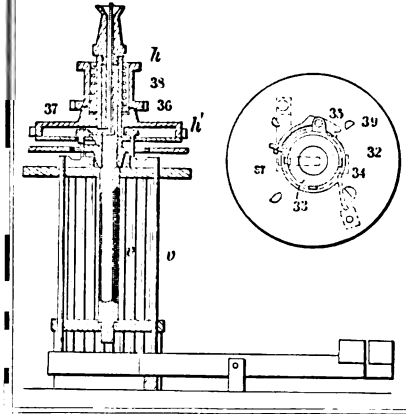

89890—C. G. Sargent—
Cotton Gin.

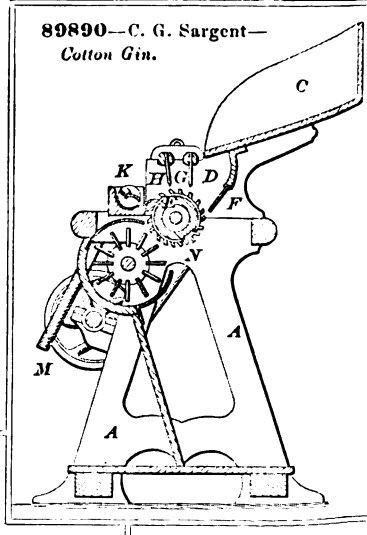

89892—J. & J. Seeberger—*Pump.*

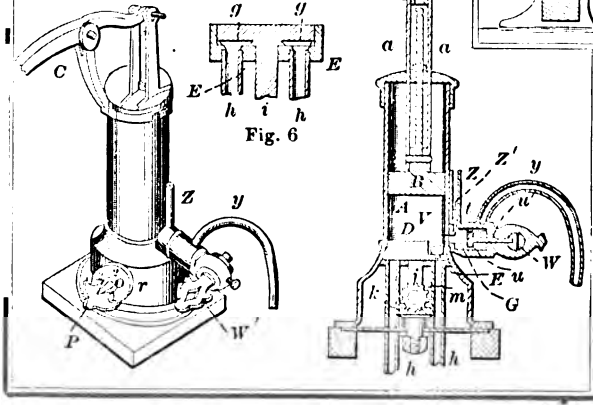

Fig. 6

89893—H. S. Shisler—
Gate Fastener.

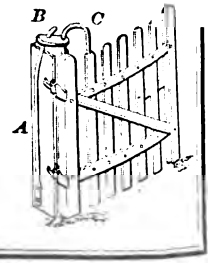

89894—A. W. Smith—*Parlor Game.*

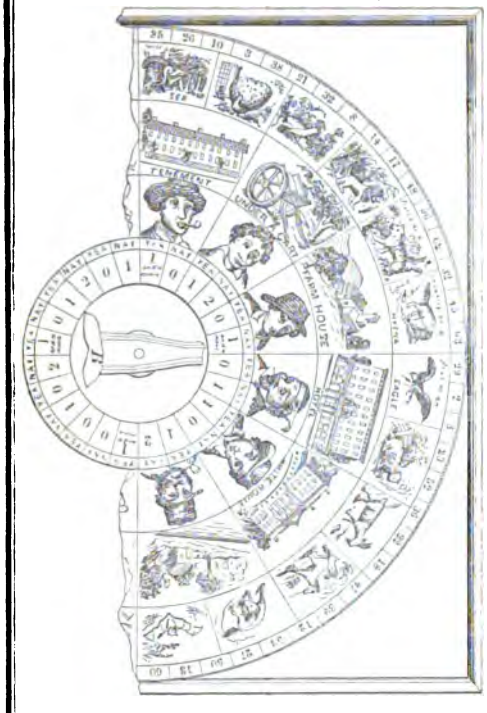

89895—E. J. Smith—*Revolving Bin.*

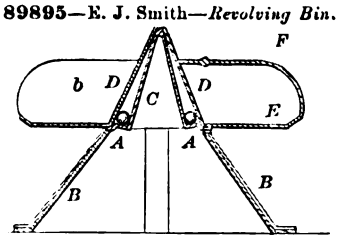

89896—C. E. Spaulding—*Beehive.*

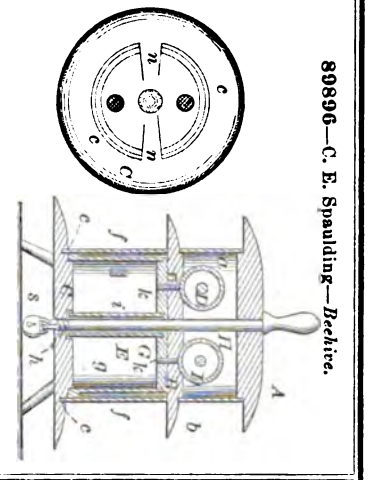

89897—M. Stiefenhofer—*Chair and Fan.*

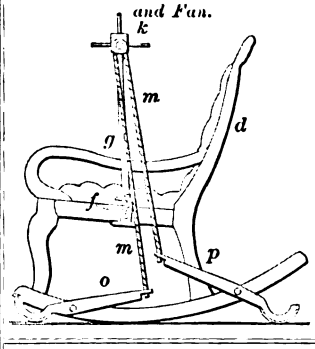

89899—J. F. Thomas—*Hay Spreader.*

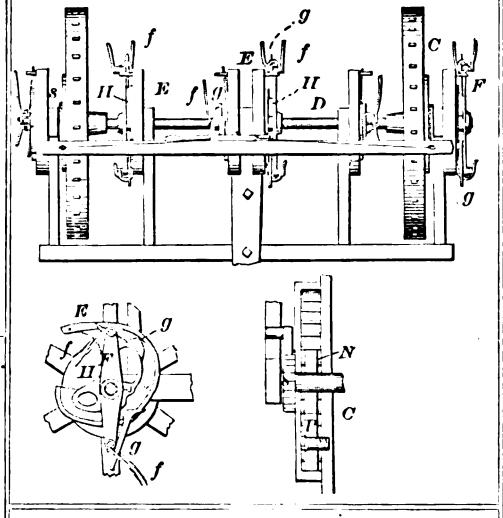

89900—A. Thompson—*Milk Cooler.*

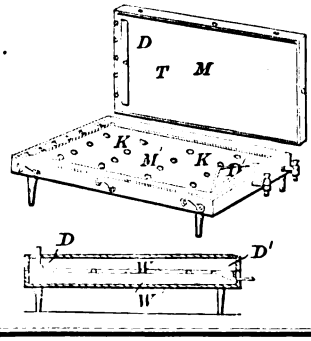

89898—J. F. Tapley—*Paper Fastener*

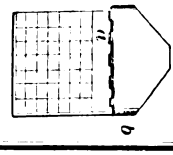

89901—Thompson & Darling—*Milk Cooler.*

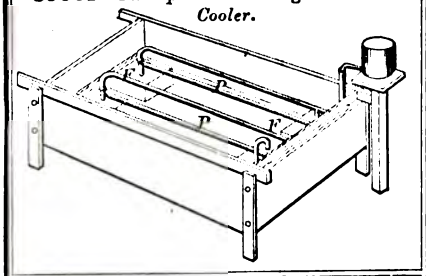

89902—S. F. Van Choate—*Fire Arm.*

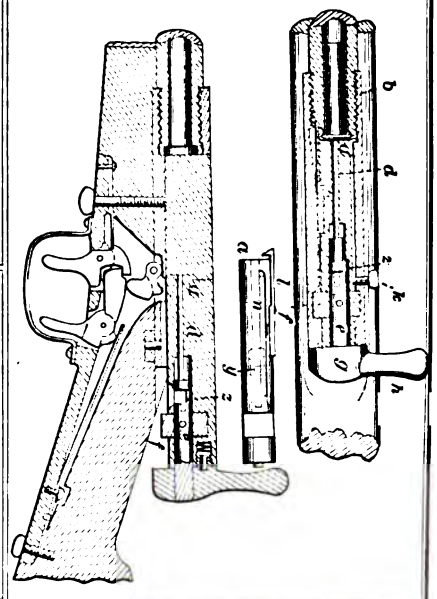

89903—T. B. Walker—*Stove.*

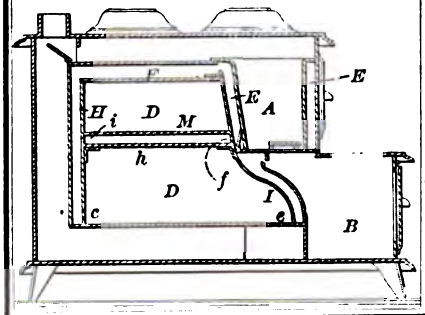

89904—M. Weaver—*Feed Regulater for Mills.*

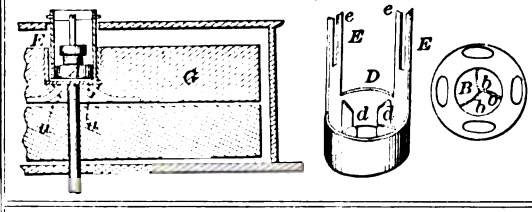

89905—W. Wellington—*Ventilator and Refrigerator.*

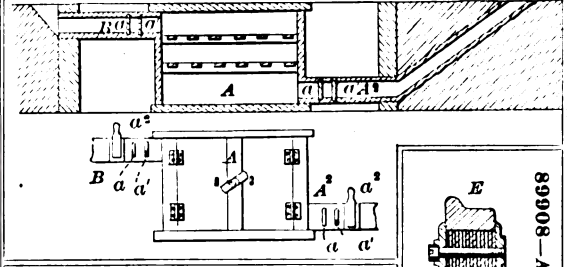

89906—W. L. Williams—*Wood Splitting Machine.*

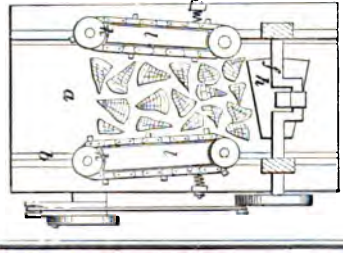

89907—Allen & Stoddard—*Flour Bolt.*

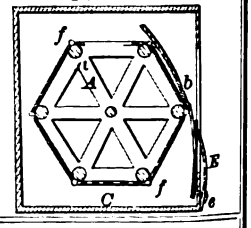

89908—Allen & Kimball—*Car Wheel.*

89909—J. A. Bailey *Pump.*

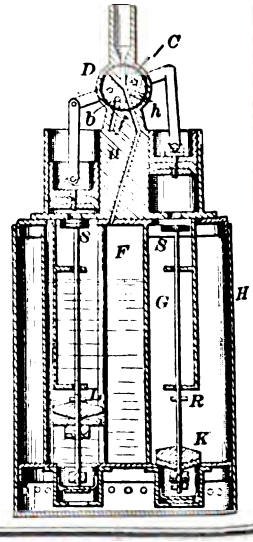

89911—V. W. Blanchard—*For Carving.*

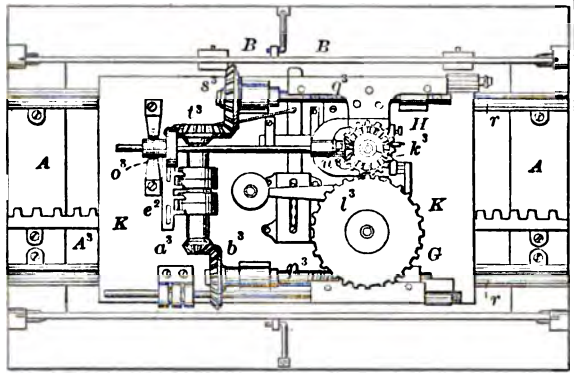

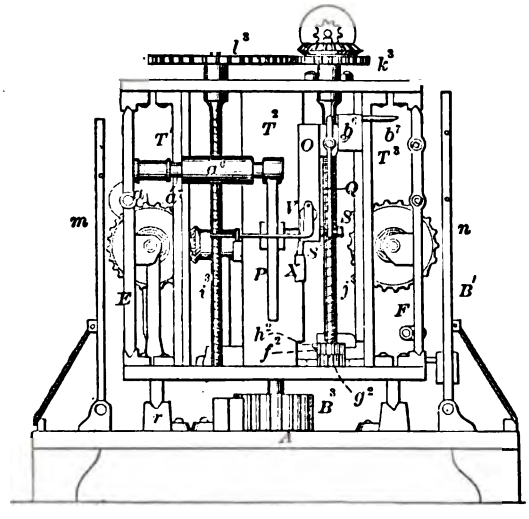

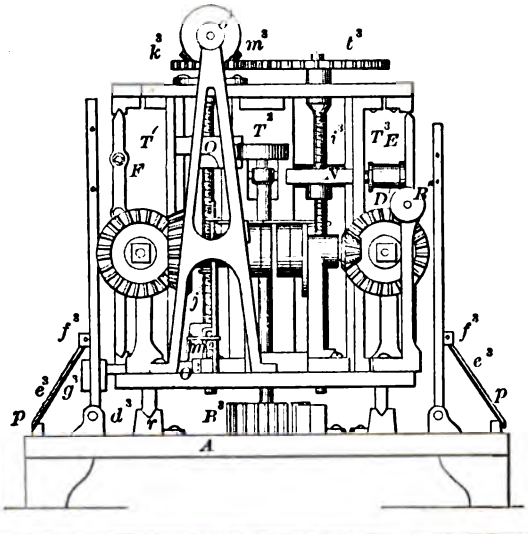

89910—O. H. Bandisch—
Explosive Compound.

89912—Boon & Bell—*Bed Bottom.*

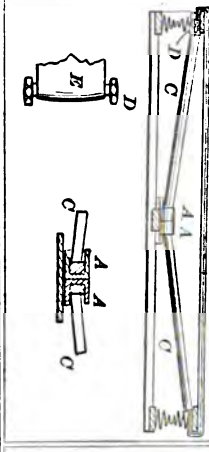

89913—A. Bransbaw—*Car Coupling.*

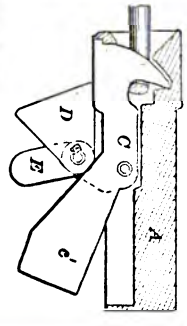

89914—T. W. Burger—
Vent for Cans.

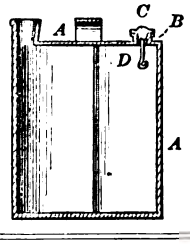

89915—D. C. Chester—
Braider for Sewing Machines.

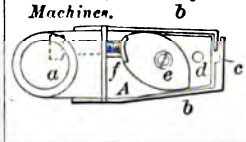

89916—J. M. Clark—*Steam Generator.*

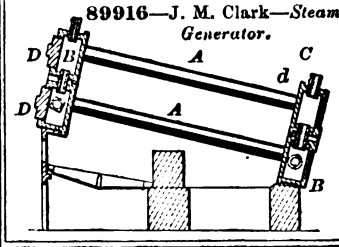

89917—B. F. Cloud—*Curtain Fixture.*

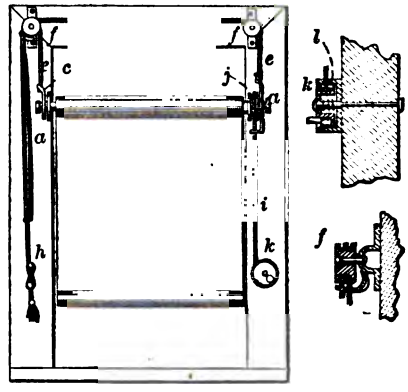

89918—J. W. Cole—*Pump.*

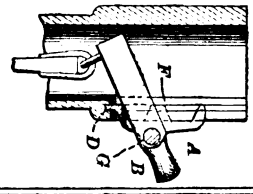

89919—C. Cross—*Foot Measure for Shoemakers.*

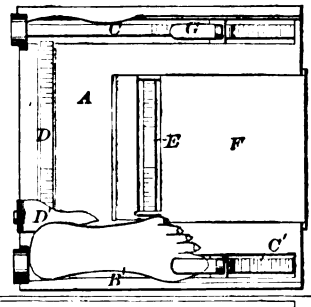

89920—F. Ebert—*Horse Hay Fork.*

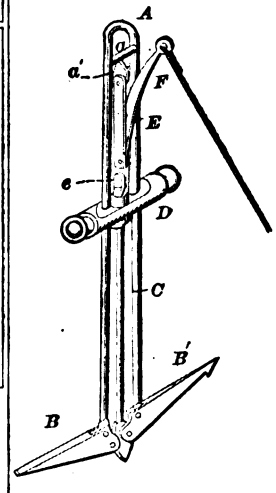

89921—G. Ewart—*Needle Wrapper.*

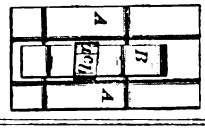

89922—D. Fasig—*For Seizing Animals.*

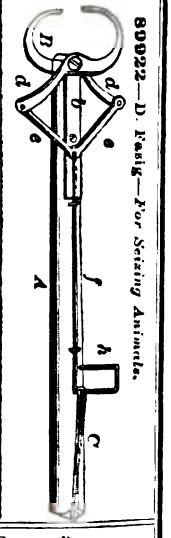

89923—J. Field—*Banjo.*

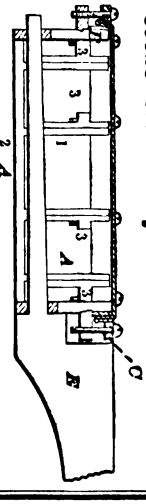

89924—G. Formica—*Rocking Chair.*

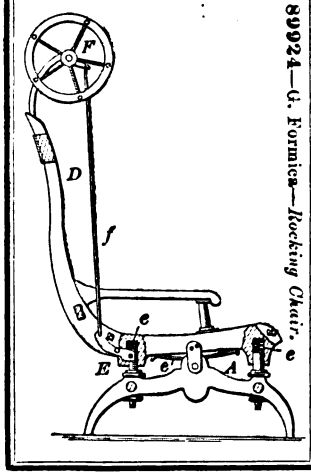

89925—J. S. Fray—*Brace Attachment.*

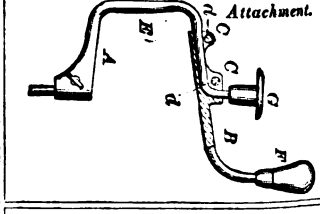

89927—L. P. Garner—*Coal Screen.*

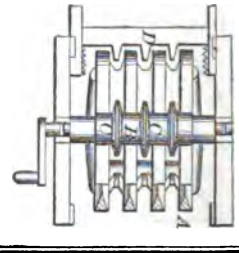

89926—C. G. Fritts—*Curtain Fixture.*

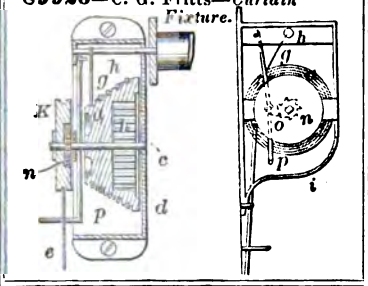

89928—Guest & Fawcett—*Memorandum Book.*

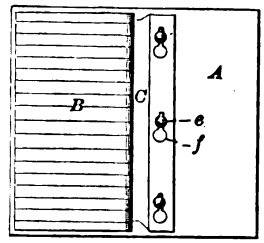

89929—V. T. Hall—*Locking Device for Stop Cocks.*

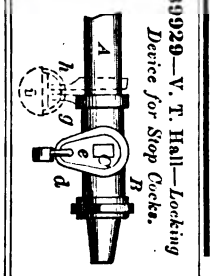

89930—V. T. Hall—*Locking Case for Stop Cocks.*

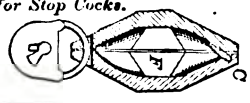

89931—J. W. Jones—*Door Lock.*

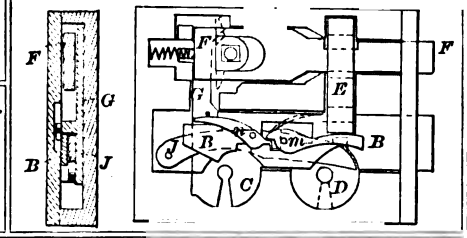

89932—T. D. Keith—*Operating Drills.*

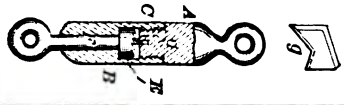

89934—I. Long—*Coffee Roaster.*

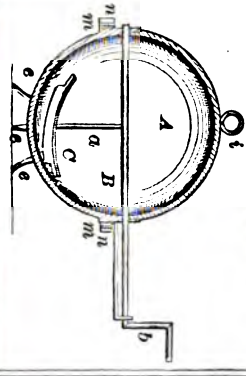

89936—C. T. Mason—*Electric Alarm.*

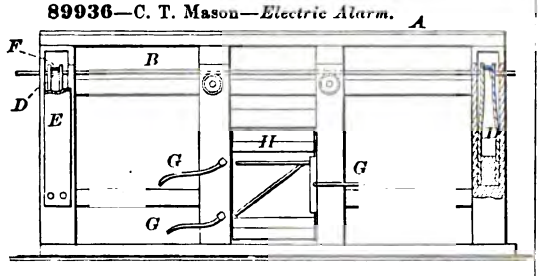

89937—W. A. McDonald—*For Cutting Mouldings in Wood.*

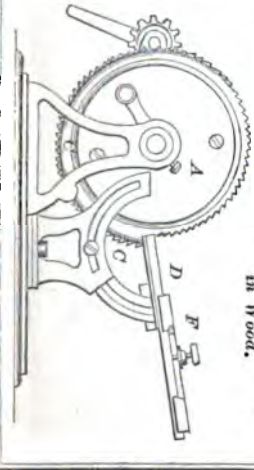

89938—D. B. Neal—*Horse Hay Fork.*

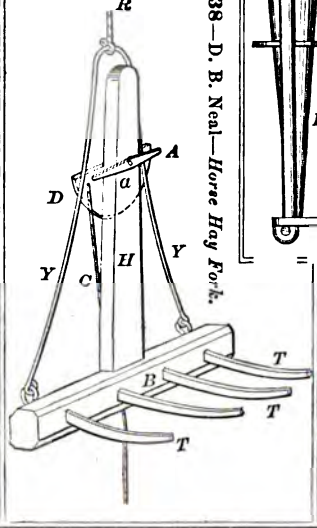

89935—F. X. Loughery—*Warp Beam.*

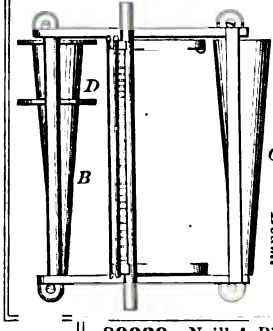

89939—Neill & Pick—*End Board for Wagons.*

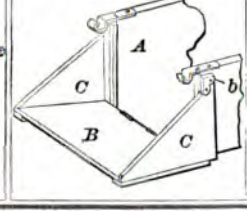

89940—H. L. Pratt—*Pen.*

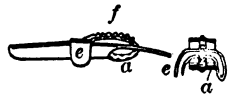

89941—H. L. Pratt—*Boiler Scraper.*

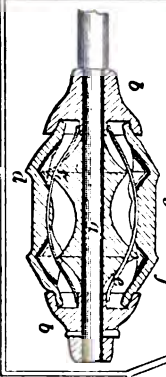

89942—W. Quayle—*Door Fastener.*

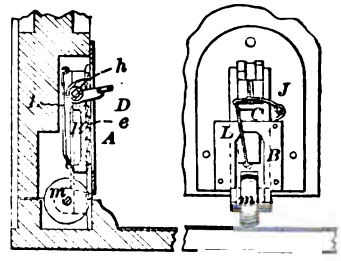

89944—J. H. Roberts—*Rock Drilling Machine.*

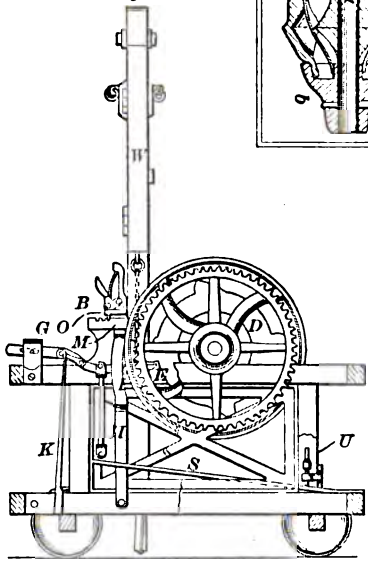

89943—T. M. Richards—*Ironing Table.*

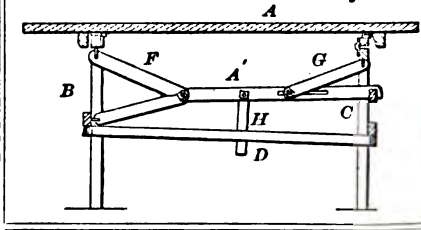

89946—J. Roy—*Draining Apparatus.*

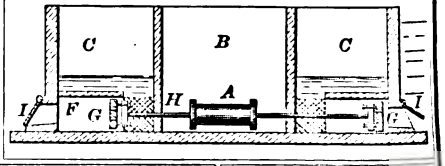

89947—G. Schulz—*Fire Arm.*

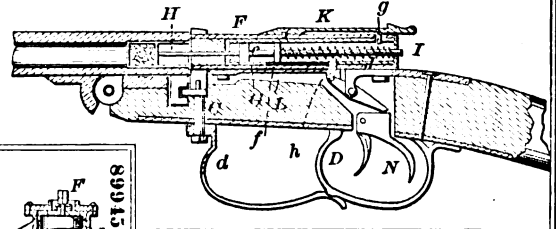

89948—F. H. Smith—*Bridge.*

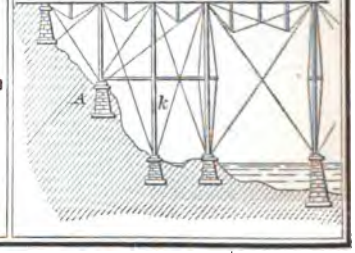

89945—A. Rhorbeck—*For Stamping Lace Paper.*

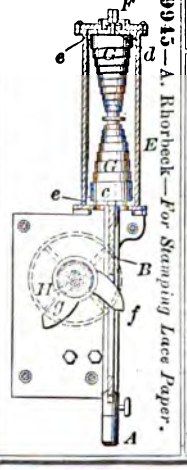

89949—N. L. Smith—*Feed Water Regulator.*

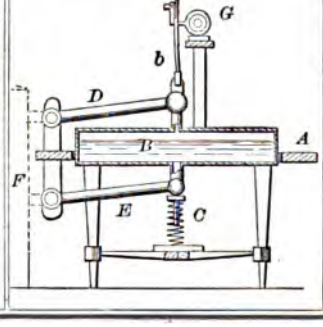

89950—E. R. & W. P. Spear—*Horse Rake.*

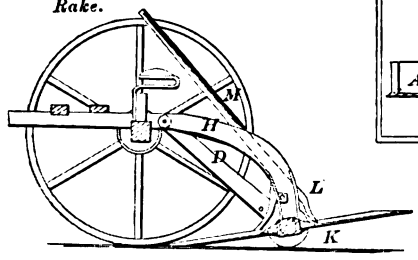

89951—H. Stollar—*Evaporator.*

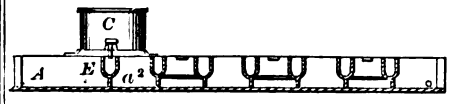

89952—J. Stratton—*Hydro-Carbon Burner.*

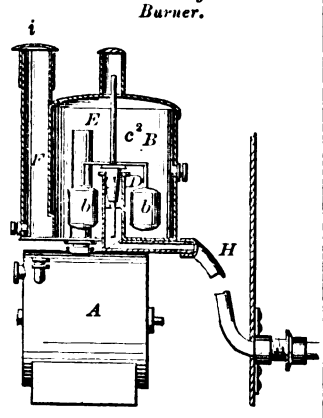

89953—A. R. Swartz—*Crib.*

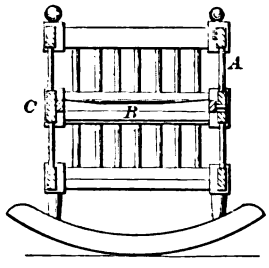

89954—Teahl & Zimmerman—*Sash Holder.*

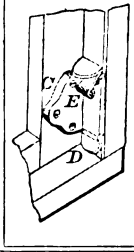

89955—L. B. Tiebel—*Fire Arm.*

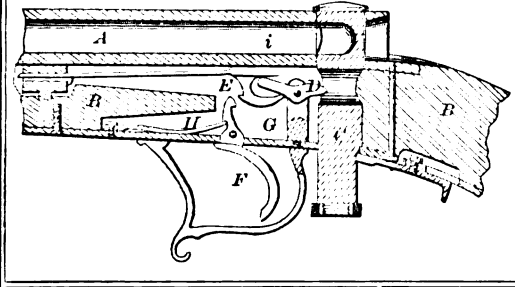

89957—S. Tutton—*For Sewing Machines.*

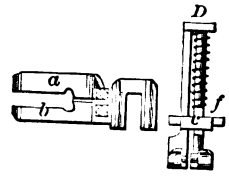

89956—Teschop & Hartman—*Horse Rake.*

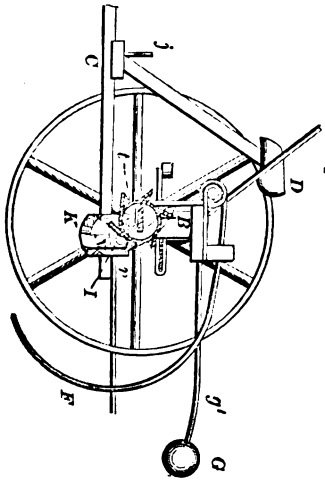

89858—A. R. Wiggs—*Cotton Planter.*

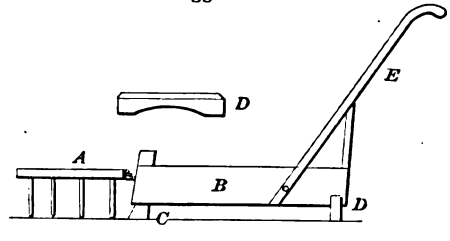

89959—A. G. Wilder—*Pipe Cutter.*

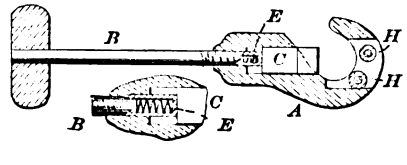

89960—B. F. Wilson—*Velocipede.*

Fig. 2

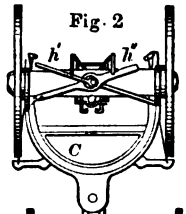

Fig. 4

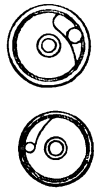

Fig. 3

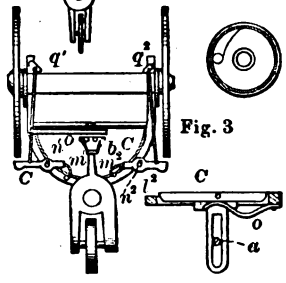

89961—D. Woodard—*For Distilling and Purifying Spirits.*

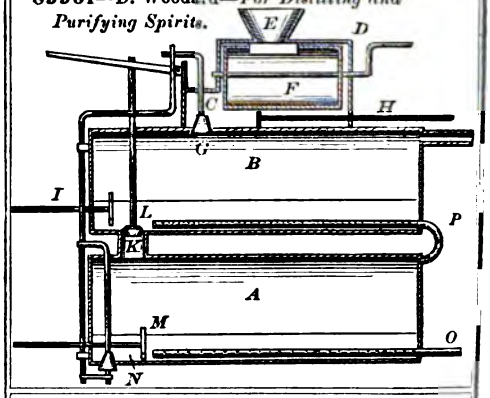

89962—R. B. Zwahlen—*Till Check.*

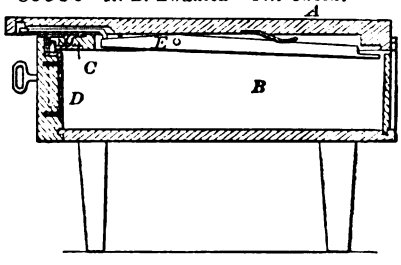

89963—J. T. Agner—*Bolting Reel.*

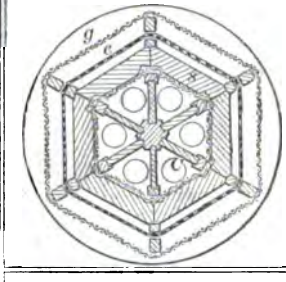

89966—G. L. Bailey—*Sample Holder.*

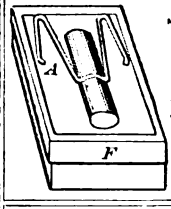

89967—M C. Battey—*Collar Fastening.*

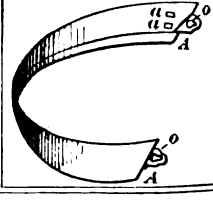

89965—W. Bacon—*Ordnance.*

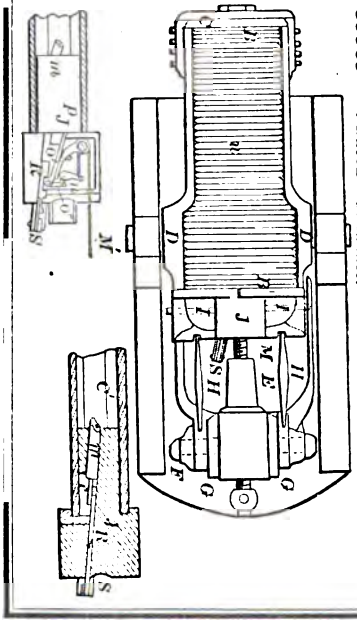

89964—J. Allgaier—*Velocipede.*

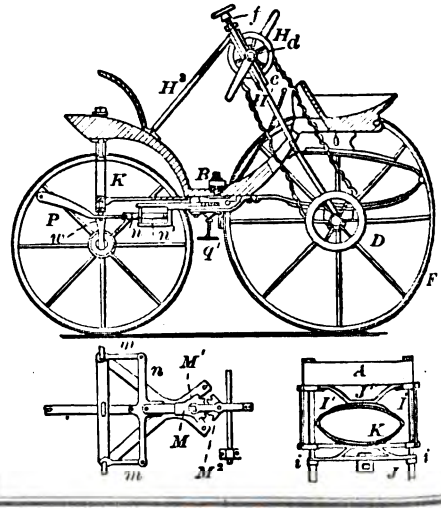

89984—B. A. Grant—*Spinning Machine.*

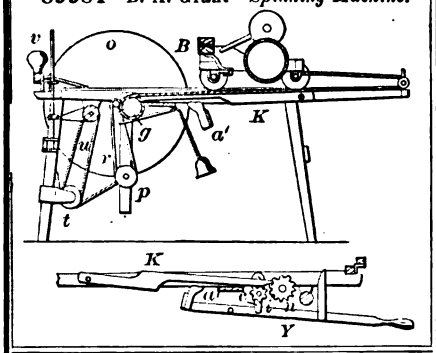

89985—G. Y. Gray—*Cracker Machine.*

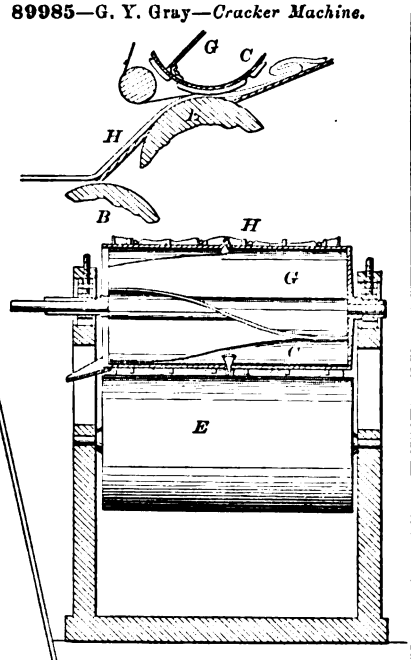

89987—L. Griswold—*Sewing Machine.*

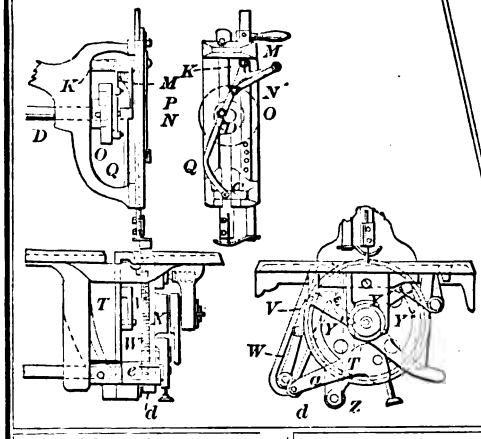

89989—H. Gross—*Lock.*

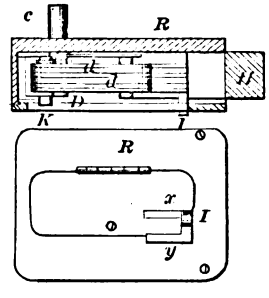

89986—C. B. Gregory—*Furnace.*

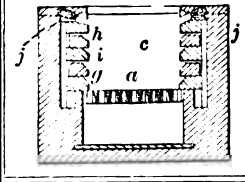

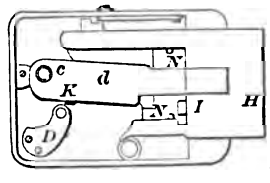

89988—Grogan & Lape—*For the Distillation of Hydro-Carbon Oils.*

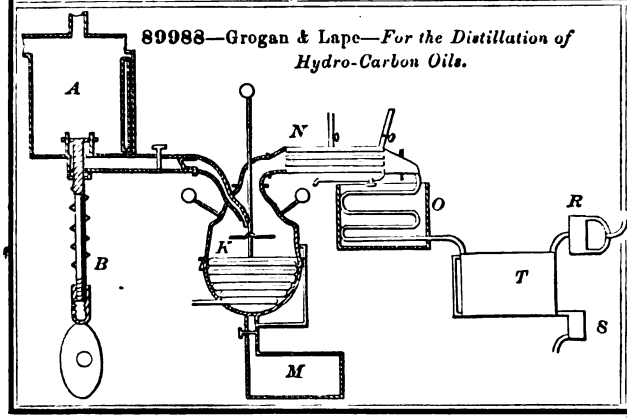

89990—E. P. Halsted—*Planing Machine.*

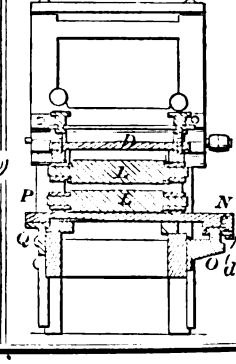

89979—Fisher & Holcomb—*Corn Harvester.*

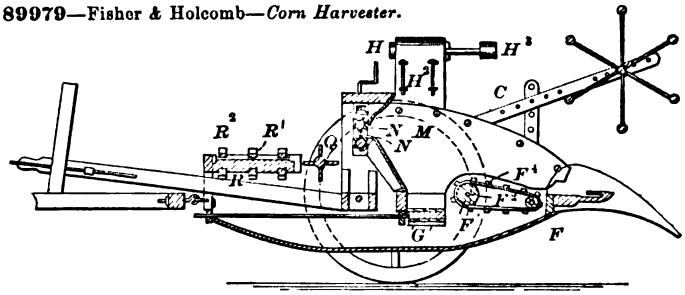

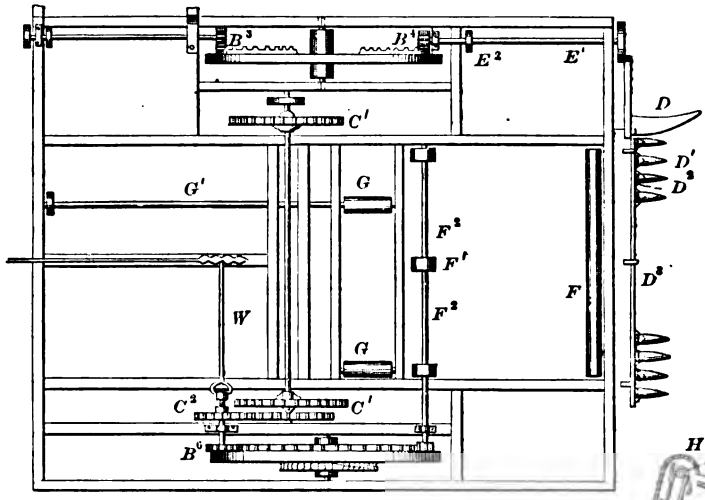

89980—C. Fogelberg—*Preparing Zinc for Organ Pipes.*

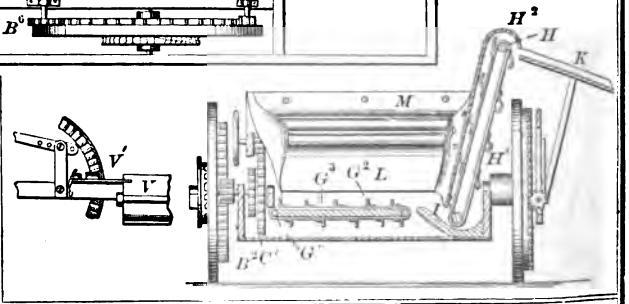

89981—T. Garrick—*Lawn Mower.*

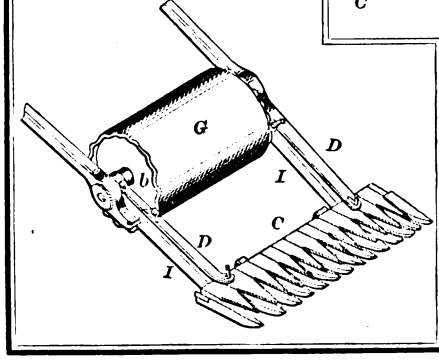

89982—J. Gawler—*Burial Case.*

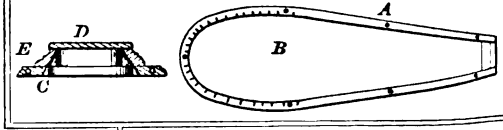

89983—J. Gould—*Grass Renovator.*

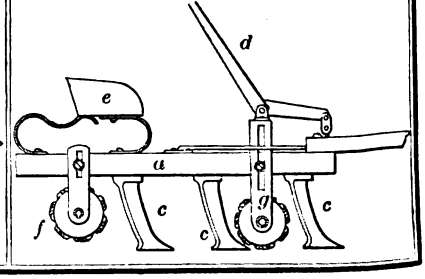

89984—B. A. Grant—*Spinning Machine.*

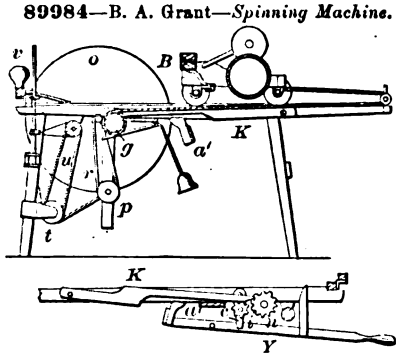

89985—G. Y. Gray—*Cracker Machine.*

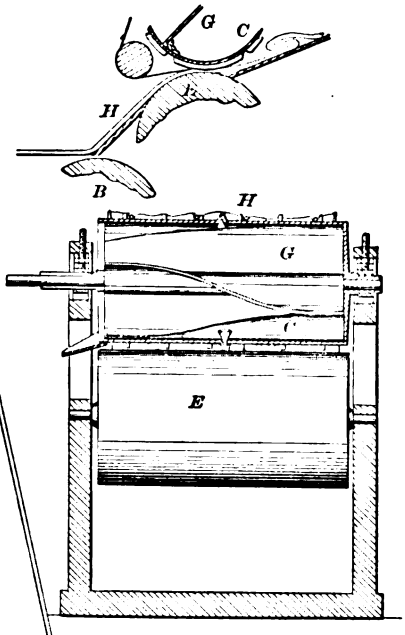

89987—L. Griswold—*Sewing Machine.*

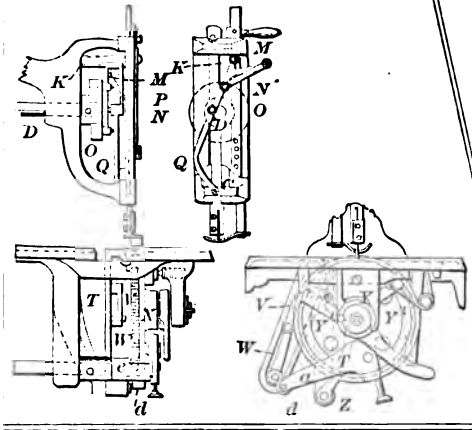

89989—H. Gross—*Lock.*

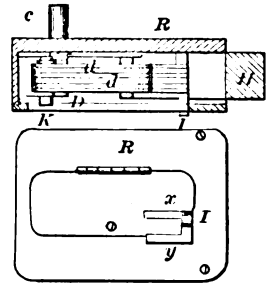

89986—C. B. Gregory—*Furnace.*

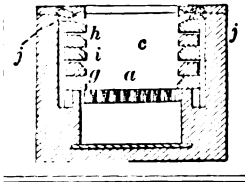

89988—Grogan & Lape—*For the Distillation of Hydro-Carbon Oils.*

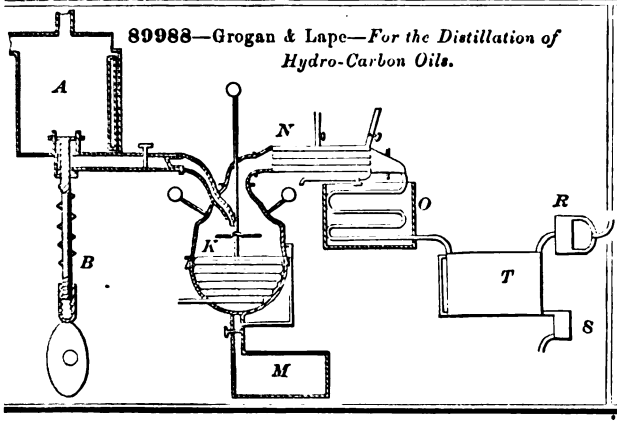

89990—E. P. Halsted—*Planing Machine.*

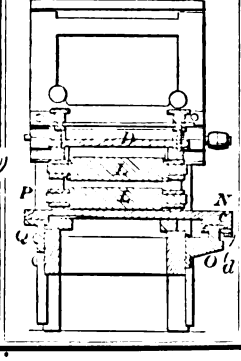

89991—Handy & Kleibacker—*Horse Shoe.*

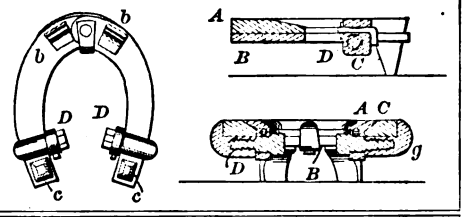

89994—R. Hermance—*Washing Machine.*

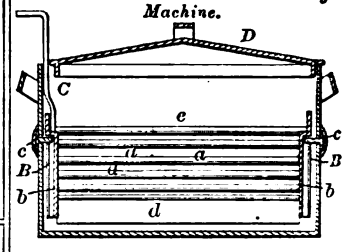

89992—T. Harbottle—*Pressure Gauge.*

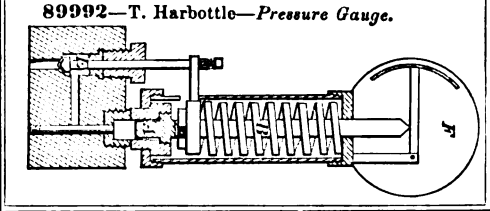

89993—T B. Harkins—*Bedstead.*

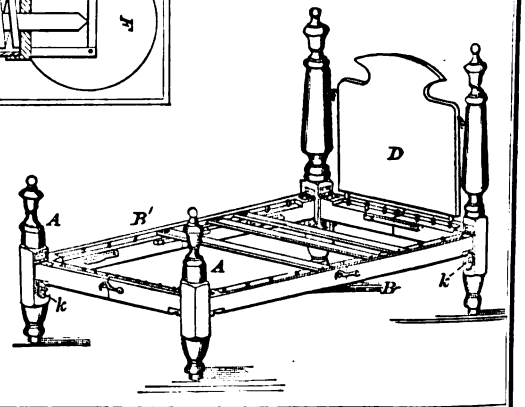

89996—J. H. Hobbs—*Pitcher.*

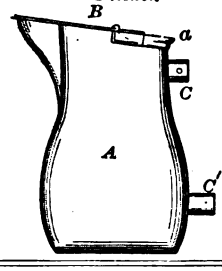

89997—A. Hoen—*Lithographic Press.*

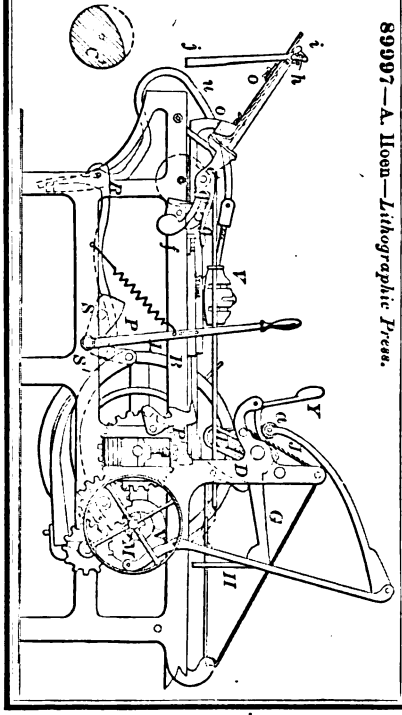

89995—Hill & Burnham—*Underpinning for Buildings.*

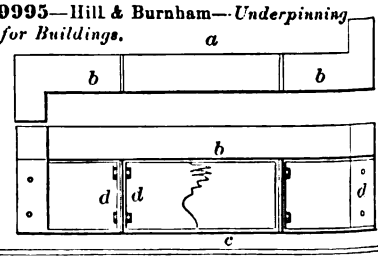

89998—A. H. Hook—*For Freeing Petroleum and other Liquids from Gas.*

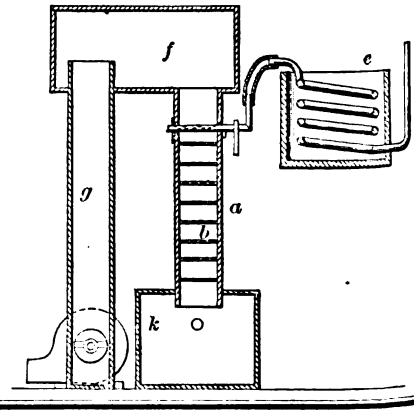

89999—E. J. Horner—*Car Spring.*

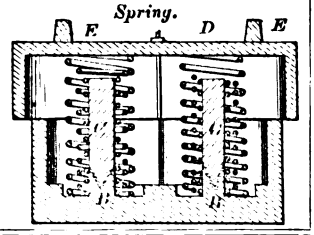

90000—A. Hubbell—*Water Wheel.*

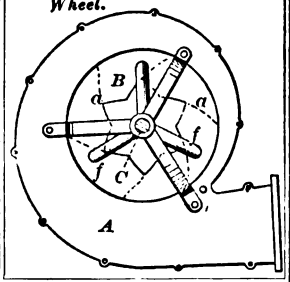

90002—H. E. James—*Churn.*

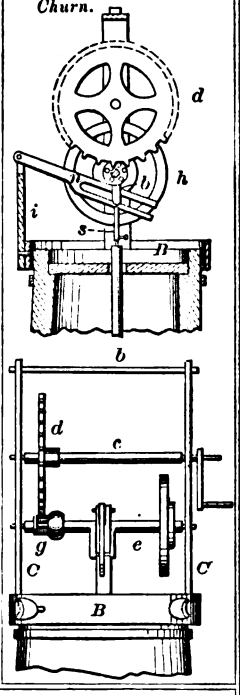

90004—W. H. Kay—*Graining Apparatus.*

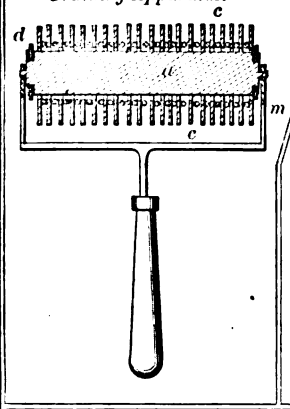

90001—A. L. Hurtt—*Washing Machine.*

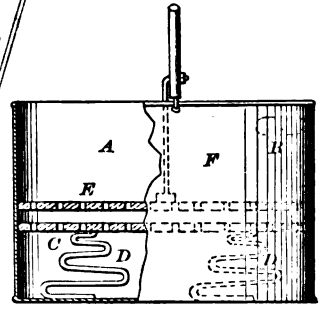

90003—Jones & Snow—*For Making Cut Nails.*

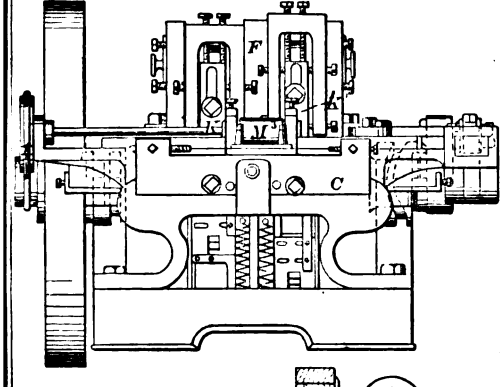

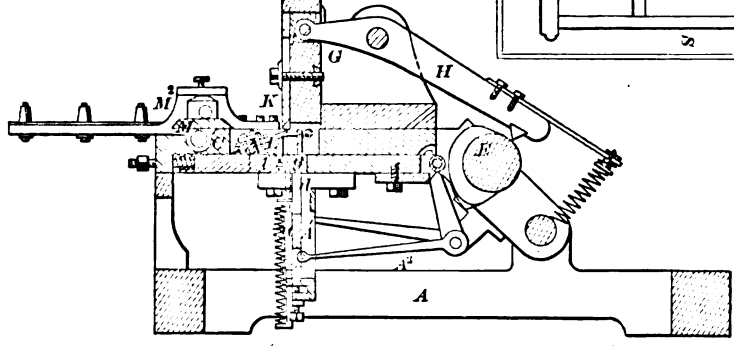

90005—J. E. Keyt—*Saw Mill Feed.*

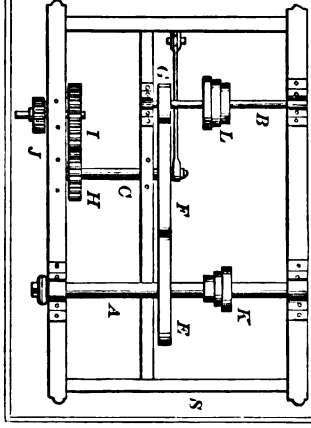

90006—W. Kopp—*Preparing and Embossing Wood.*

90007—C. Mackh—*Lantern.*

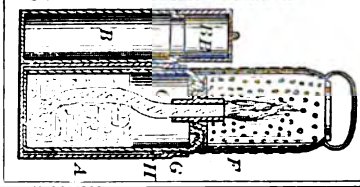

90009—J. Maltry—*Fan.*

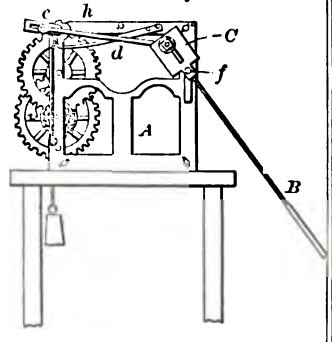

90008—N. Maisonneuve—*Corn Planter.*

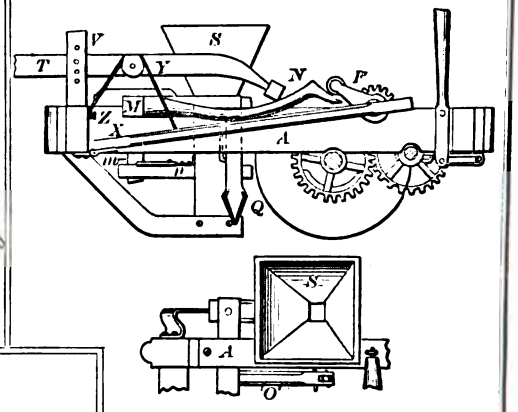

90013—G. Murray—*Bag Tie.*

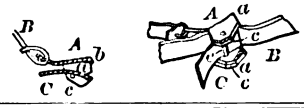

90011—Mitchell & Kessinger—*Flour Bolt.*

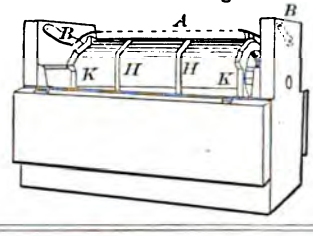

90010—T. T. Markland, Jr.—*For Saw Sharpening.*

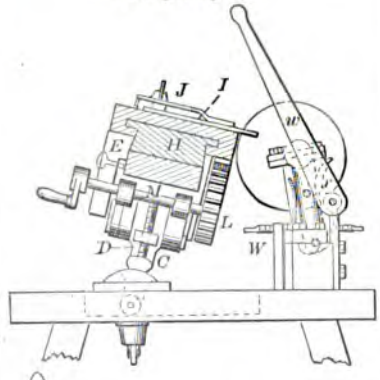

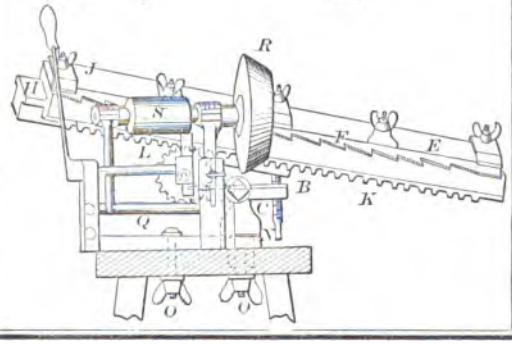

90012—E. L. Mix—*Carburetter.*

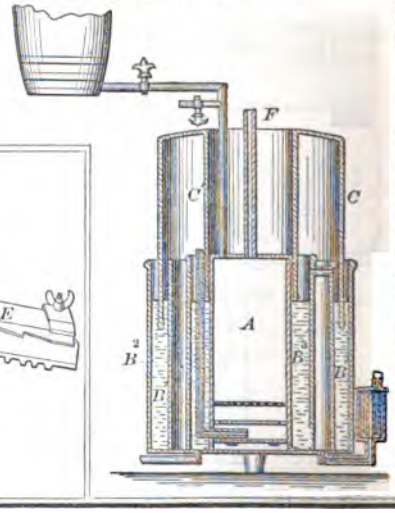

90015—North & Thompson—*Water Cock.*

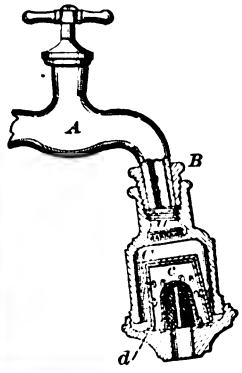

90016—A. Overholt—*Boot Crimp.*

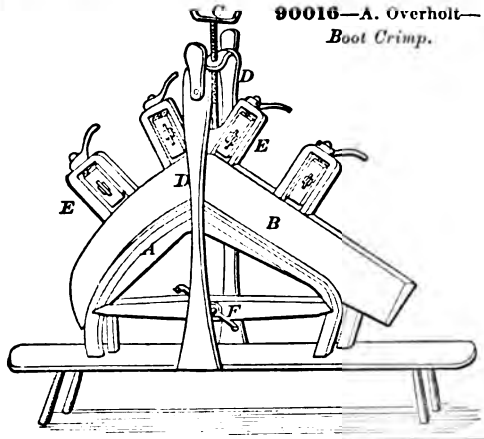

90017—J. D. Parsons—*Advertising Calendar.*

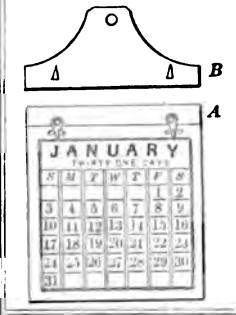

90018—F. A. Pauck—*Tobacco Carrier and Dresser.*

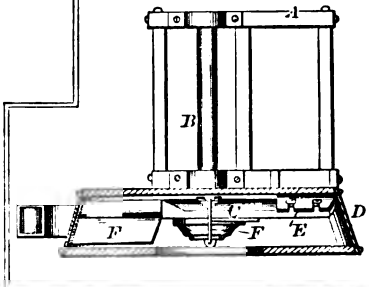

90019—J. B. Pedrick—*Steam Pipe for Reversing Steam Engines.*

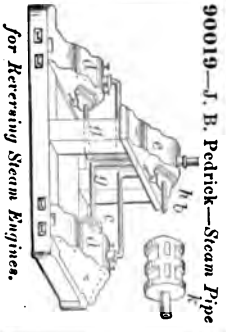

90021—J. T. Pope—*Lamp Shade Holder.*

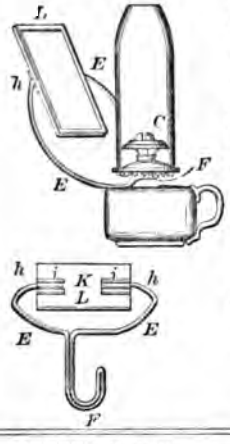

90020—J. G. Perry—*Harvester.*

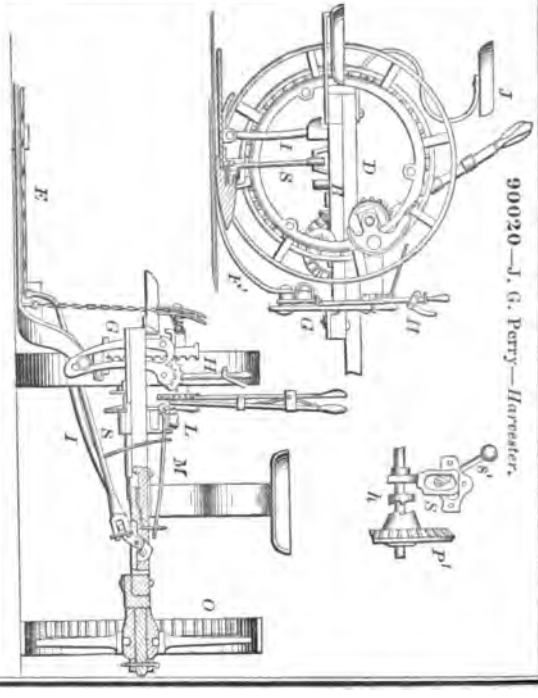

90023—S. J. Reeves—*Railway Rail.*

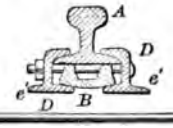

90024—B. S. Roberts—*Fire Arm.*

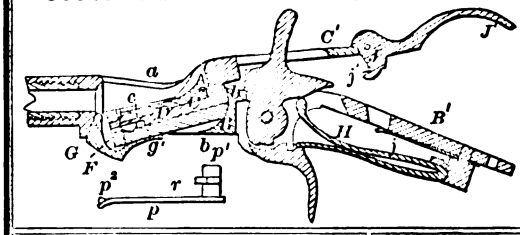

90025—W. H. Robinson—*Leveling Staff.*

90026—G. W. Roland—*Buckle.*

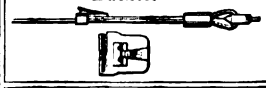

90027—W. C. Scott—*Lumber Dryer.*

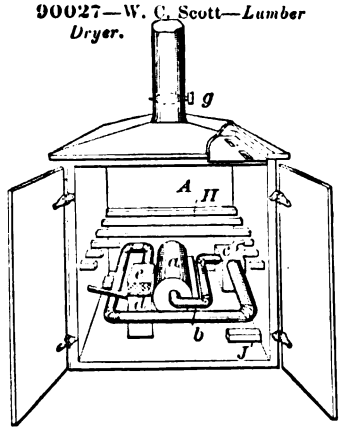

90028—W. S. & E. H. Shoemaker—*Hog Ring.*

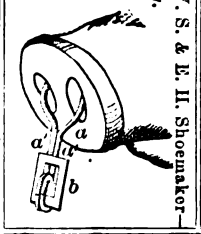

90030—M. Simons—*Coffee and Tea Pot.*

90031—G. C. Smith—*Hose.*

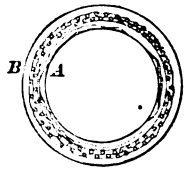

90033—T. S. Speakman—*Steam Generator.*

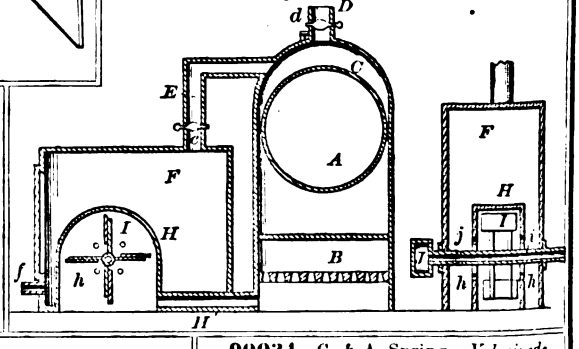

90032—H. Smith—*Velocipede.*

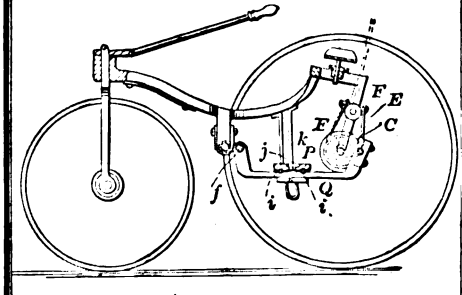

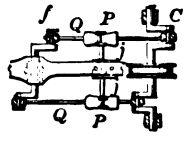

90034—C. & A. Spring—*Velocipede.*

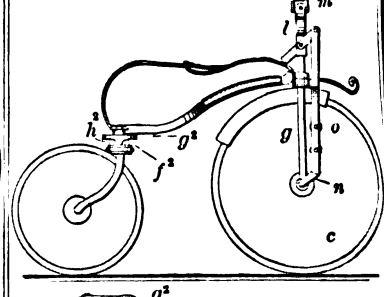

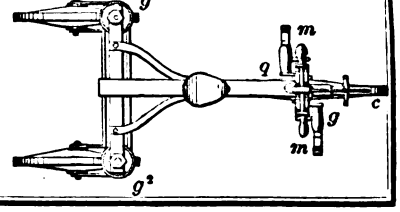

90035—J. Taylor—*Washing and Fulling Machine.*

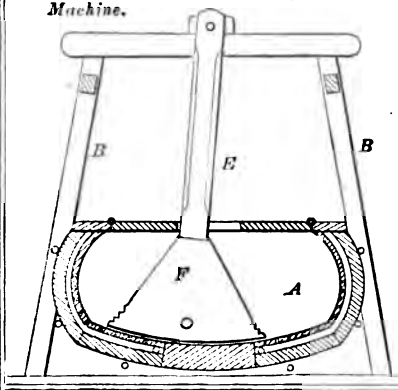

90036—A. Turner—*Child's Table Tray.*

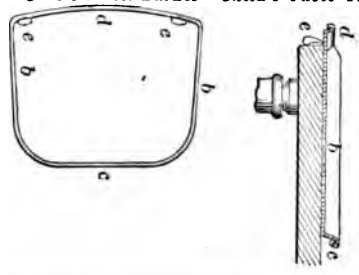

90037—E. D. Weatherbee—*Cork Fastener.*

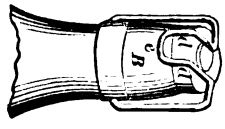

90038—B. W. Weaver—*Stump Extractor.*

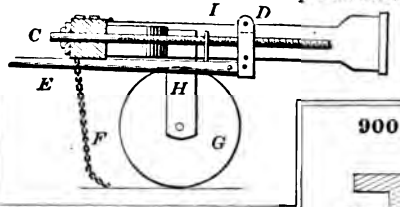

90039—J. H. Wittmer—*Power Press for Hay, &c.*

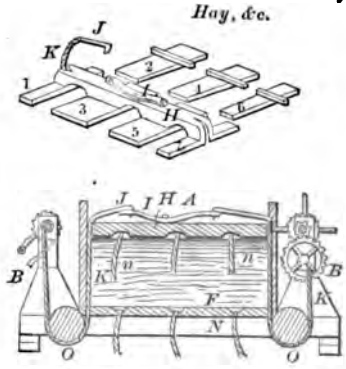

90040—A. E. Young—*Glassware Mould.*

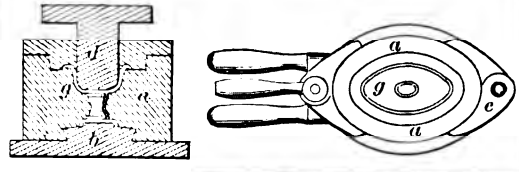

90042—T. H. De Motte—*Washing Machine.*

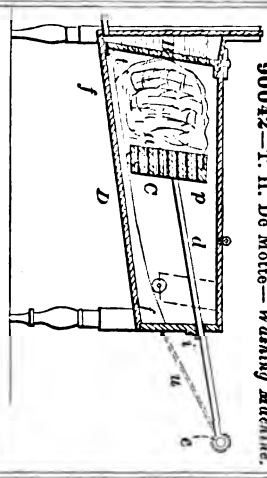

90041—C. W. Cotton—*For Forming Oval Tenons.*

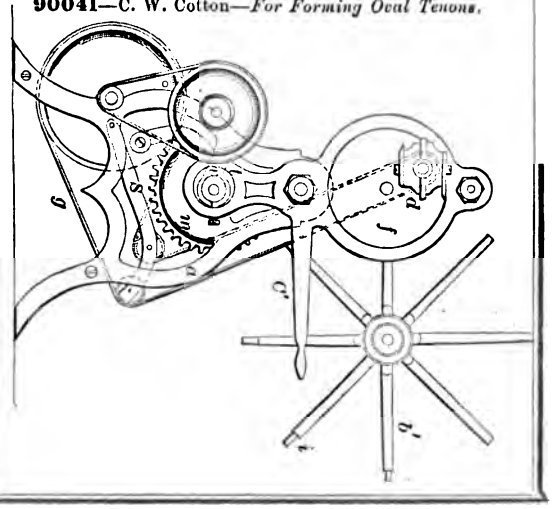

90045—A. Harroun, Jr.—*Machine Made Stitch.*

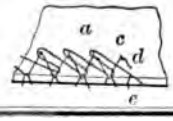

90043—W. Gardiner—*Sawing Machine*

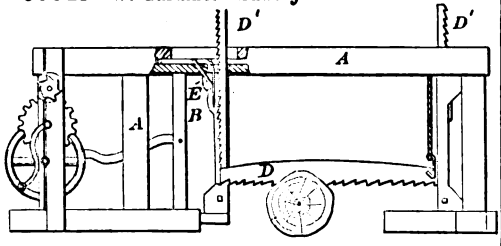

90040—B. Kennon—*Centre Board.*

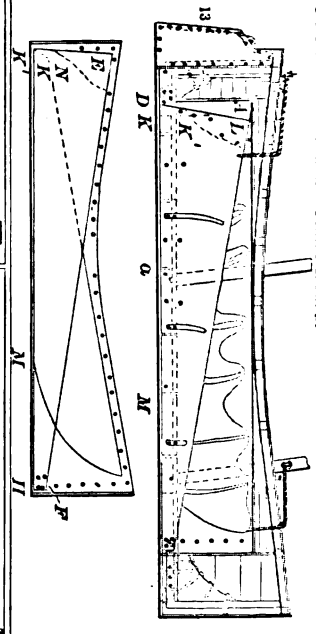

90047—P. N. J. Macabies—*Boiler Feeder.*

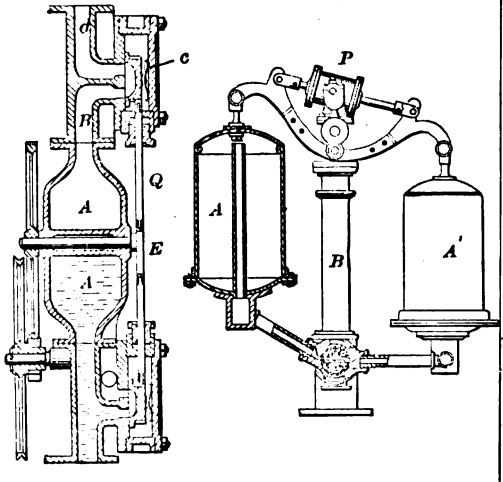

90044—J. S. Gold—*Measuring Can.*

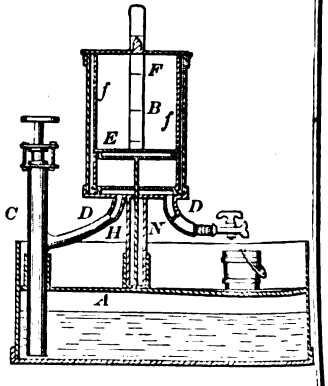

90049—F. H. Morgan—*Boot and Shoe Heel.*

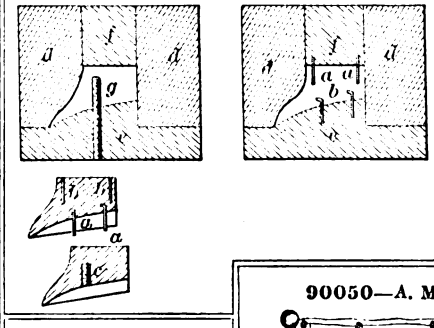

90050—A. M. Rodgers—*Mosquito and Fly Net.*

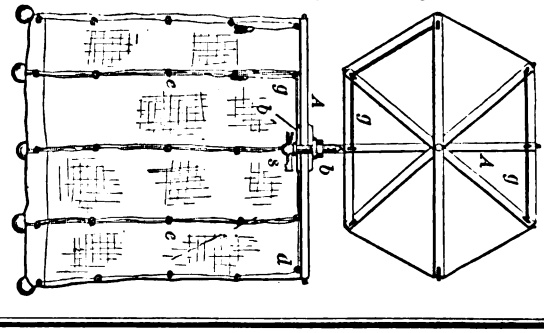

90051—Z. Rogers—
Air Inhaler.

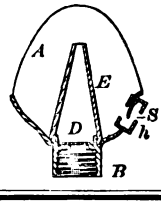

90052—M. A. H. Saurman—*Book Curb.*

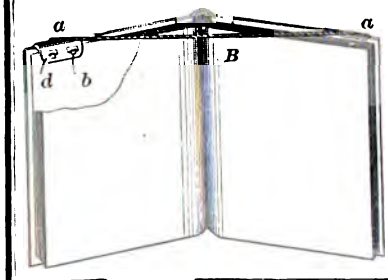

90054—H. Searle—*Mosquito Bar Frame.*

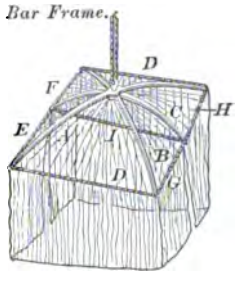

90055—W. S. & E. H. Shoemaker—*Clothes Line Clamp.*

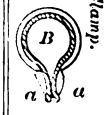

90053—J. Scholer—*Wine and Cider Press.*

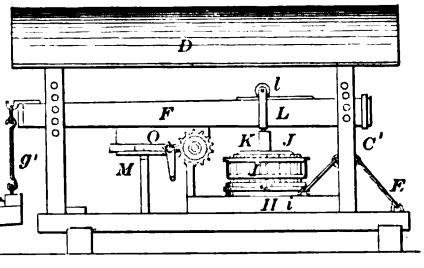

90059—Westhead & James—*Sewing Package.*

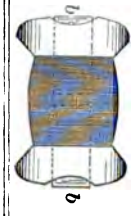

90056—W. H. Smith—*Graining Machine.*

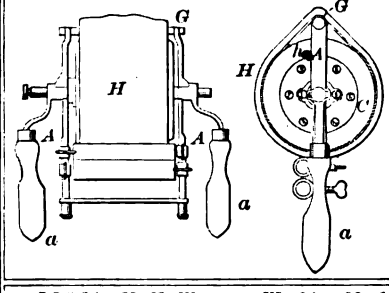

90058—I. R. Weisiger—*Dermatic Medicator.*

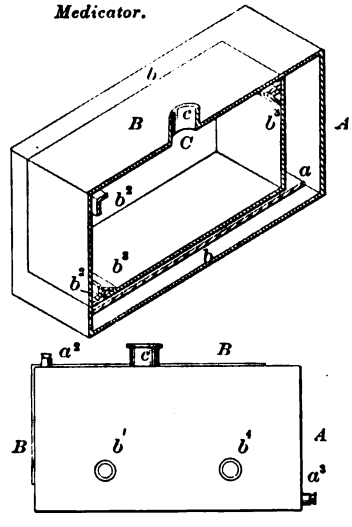

90061—H. H. Waters—*Washing Machine.*

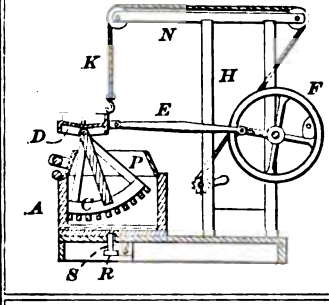

90062—J. F. Adams—*Gold Leaf Condenser.*

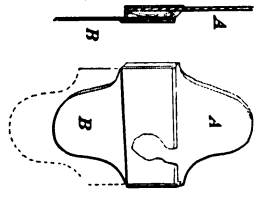

90060—D. Fitzgerald—*Railway Car.*

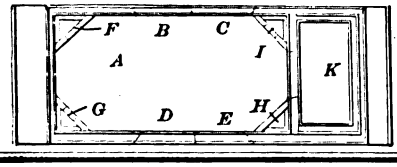

90063—J. H. Atkinson—*Comb and Sheare.*

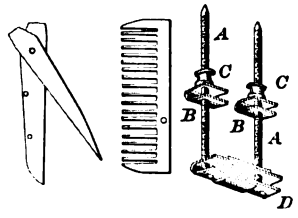

90065—O. W. Baldwin—*Potato Digger.*

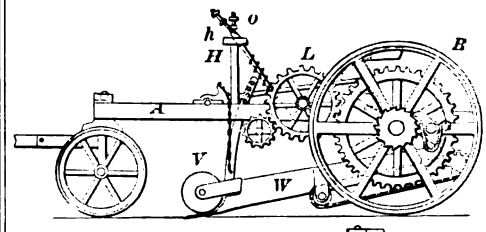

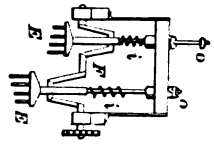

90066—N. Bauman—*For Brewing.*

Fig. 3

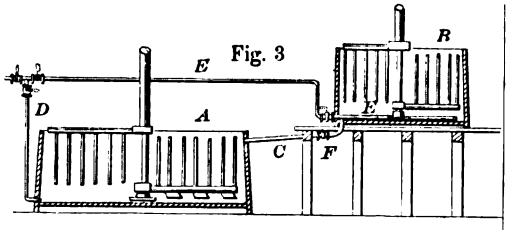

Fig. 1

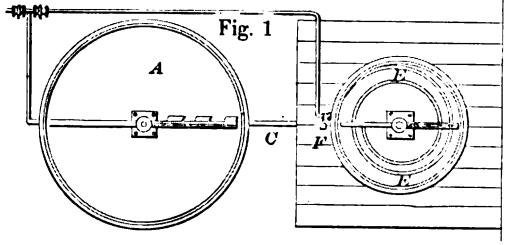

90067—Bigelow & Baldwin—*For Purifying Waste Gases.*

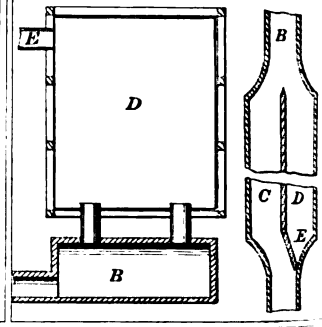

90068—J. A. Bilz—*Plow Clevis.*

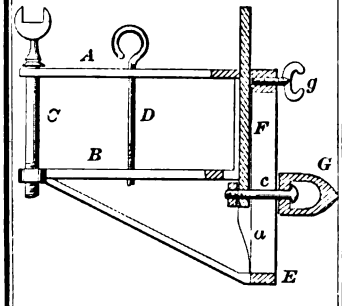

90070—Blodgett & Weatherby—*Pocket Book Alarm.*

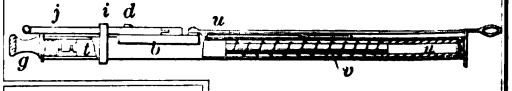

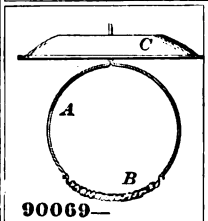

90069—E. C. Blakeslee—*Lamp Reflector.*

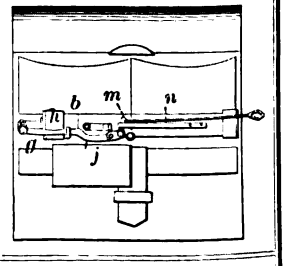

90071—H. C. Boardman—*Log Sawing Machine.*

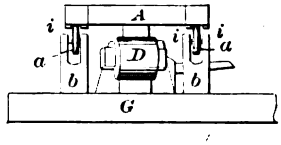

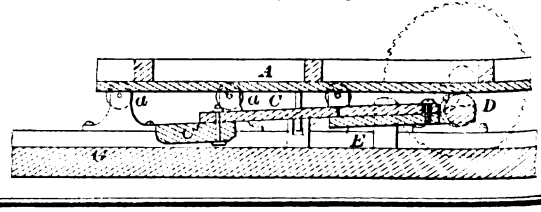

90072—F. W. Born—*Washing Machine.*

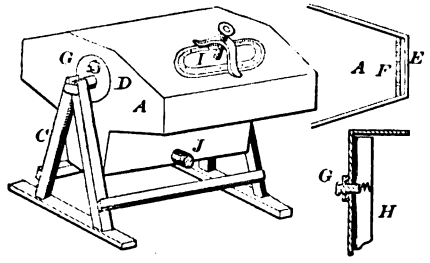

90074—C. D. Brewer—*Gate.*

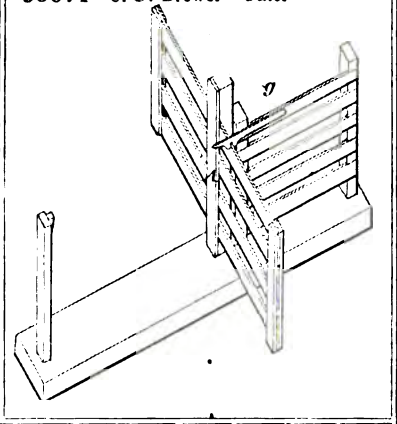

90076—E. L. Brown—*Bootjack.*

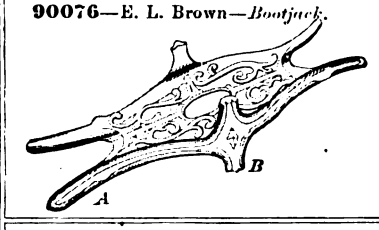

90078—W. Chase—*Settee.*

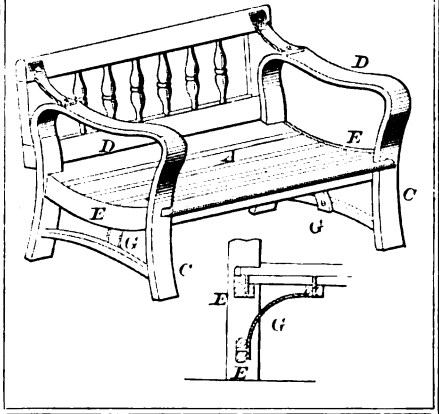

90077—W. H. Butterworth—*Hay Spreader.*

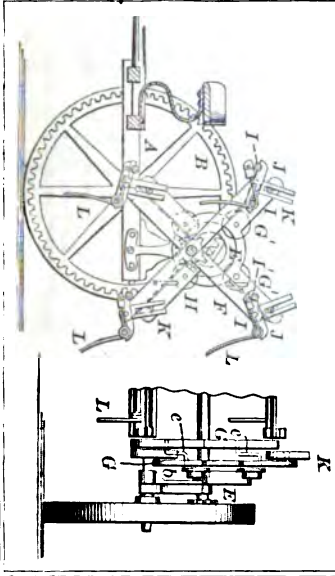

90079—G. W. Clapper—*Feed Regulator.*

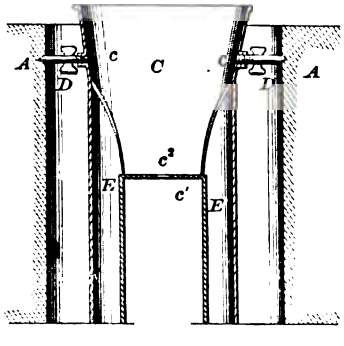

90080—W. H. T. Clark—*Pump*

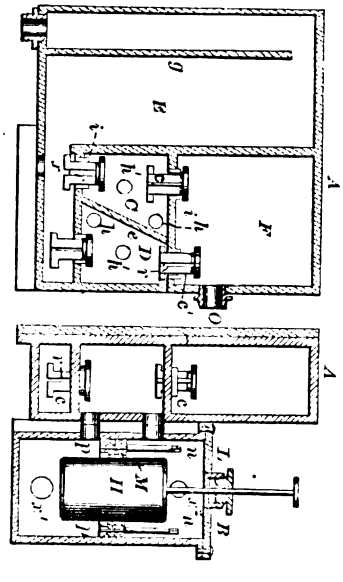

90081—L. Cline—*For Hanging Wall Paper.*

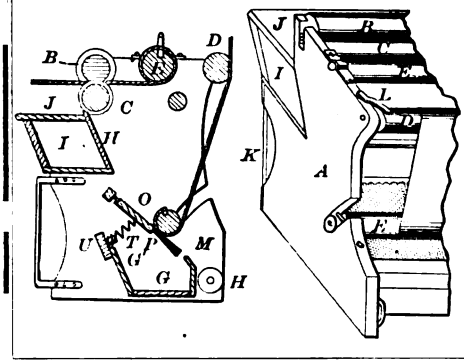

90082—T. De Kimp—*Wagon Seat.*

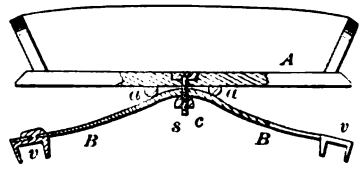

90083—A. Dęmarce—*Steam Generator.*

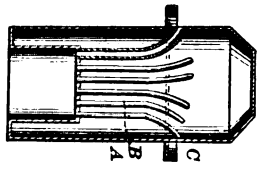

90088—C. D. Flynt—*Trunk.*

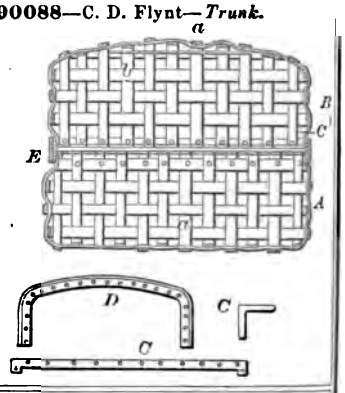

90087—G. B. Flint—*Manure and Hay Fork.*

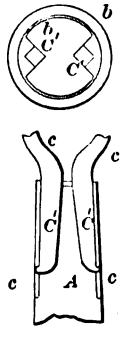

90085—J. C. Duckworth—*Power Loom.*

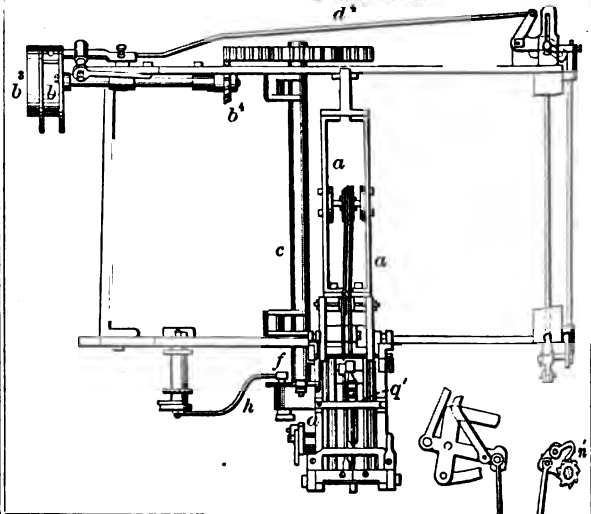

90086—G. L. Du Laney—*Harvester Cutter.*

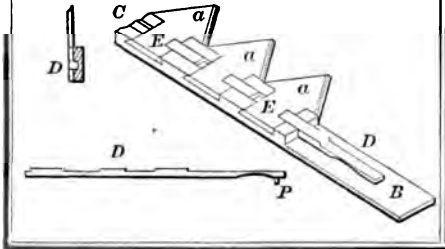

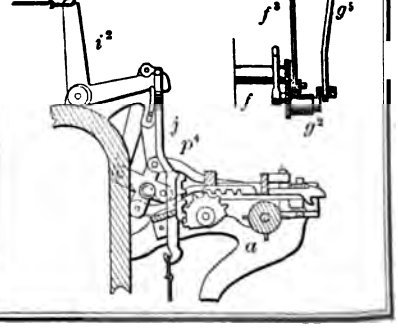

90089—A. Foucaut—*Submarine Telegraph Cable.*

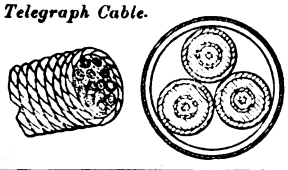

90091—G. P. Gordon—*Printing Press.*

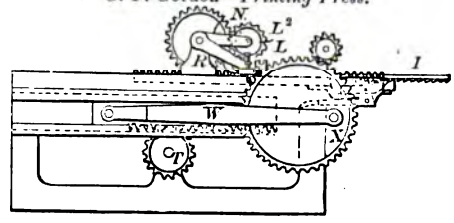

90092—L. D. Gould—*Window Fastener.*

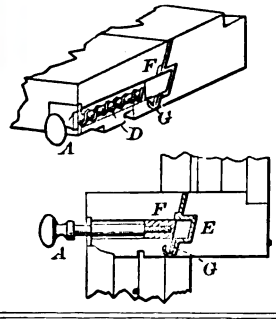

90090—W. Gale—*Straw Cutter.*

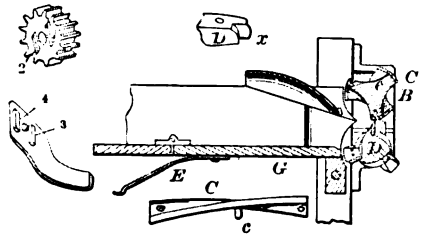

90093—E. H. Grant—*Tempering Metals.*

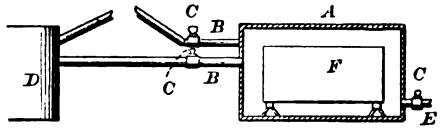

90094—Greenlee & Redfield—*For Cooling Liquids.*

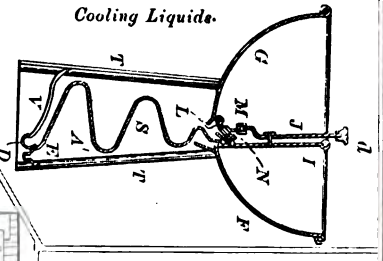

90095—J. Gwynn—*Furnace.*

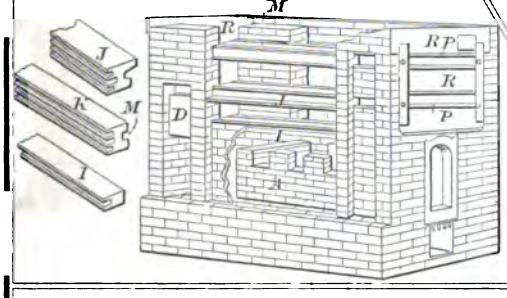

90096—W. Hall—*Lock.*

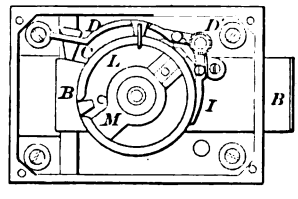

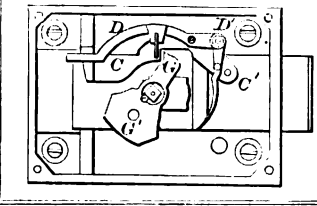

90097—M. Hanford—*Bone Black Apparatus.*

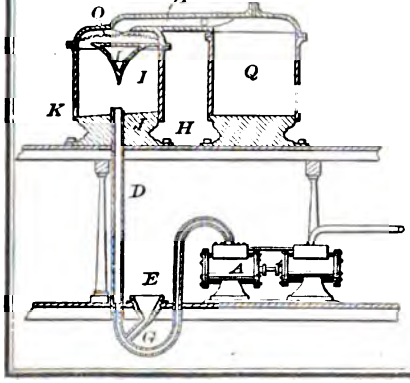

90101—E. N. Hillsgrove—*Ox Yoke.*

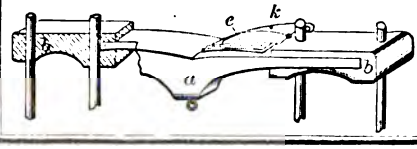

90098—Hawbecker & Thomas—*Horse Hay Fork.*

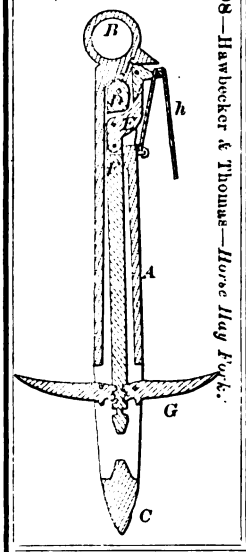

90099—M. H. Hawkins—*Artificial Leg and Foot.*

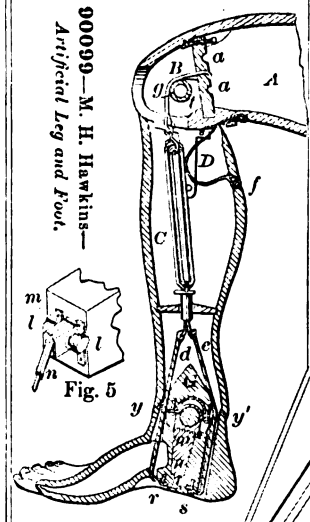

Fig. 5

90102—N. H. Howard—*Stove Pipe Shelf.*

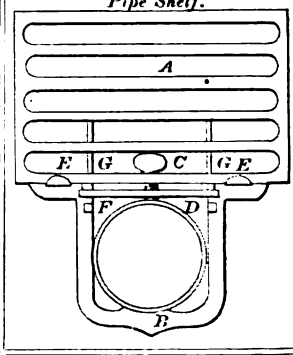

90105—B. Irous—*Painters' Easel.*

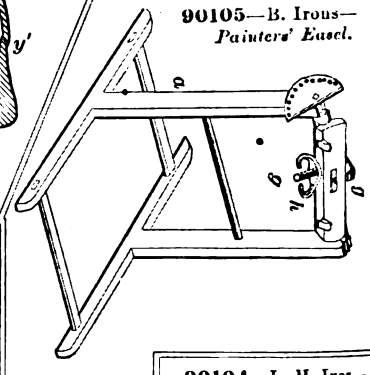

90107—V. P. Kimball—*Cheese Box.*

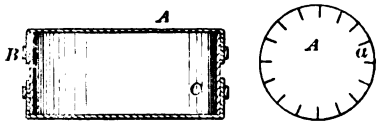

90104—L. H. Ives—*Meat Block.*

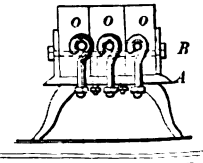

90103—S. K. Hoxsie—*Coat and Grain Boat Elevator.*

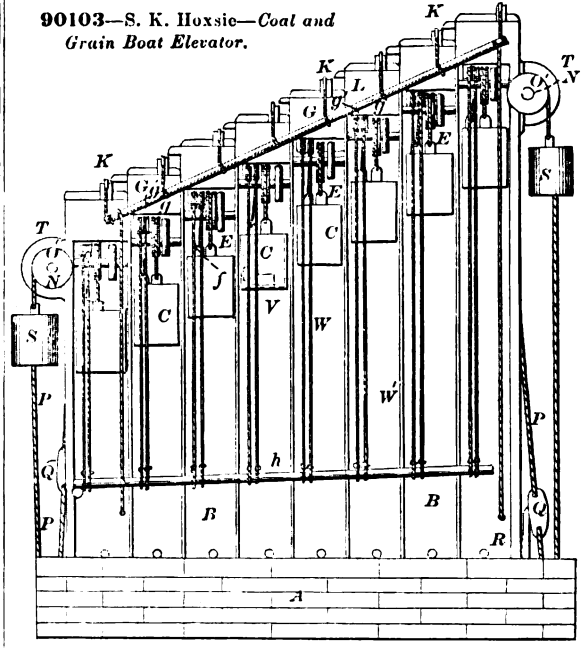

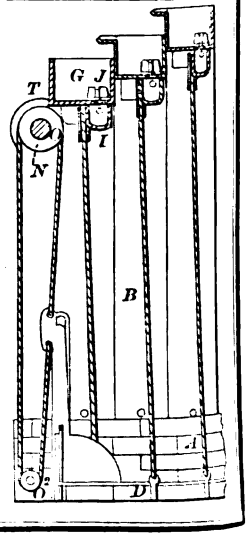

90108—J. B. Kingham—*For Making Cut Nails.*

90110—D. Lee—*Steam Engine.*

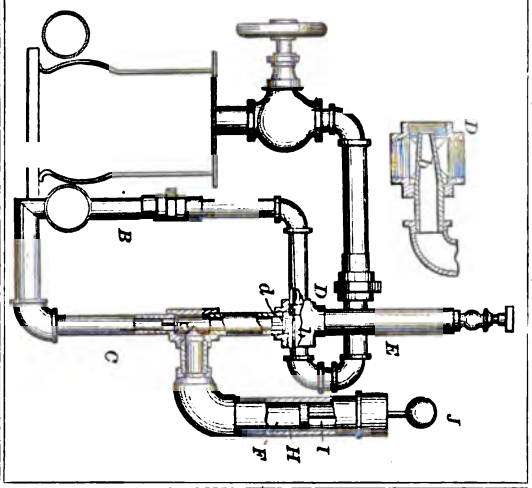

90113—McKay & Bayley—*Sail Hank.*

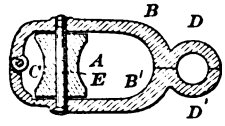

90112—J. McIlvain—*Cultivator.*

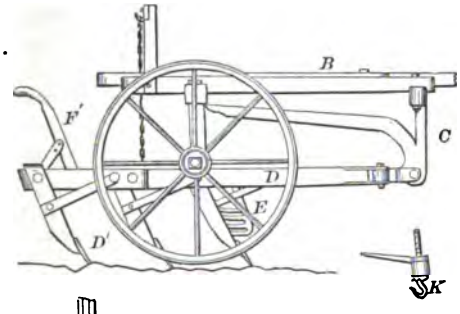

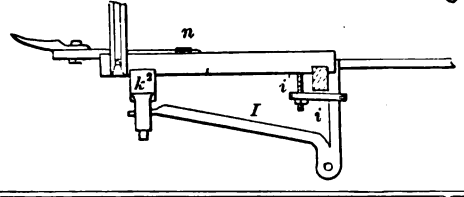

90115—M. Meade—*Boot and Shoe Patterns.*

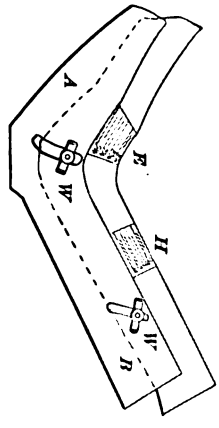

90114—T. H. Mead—*Fly Frame for Printing Presses.*

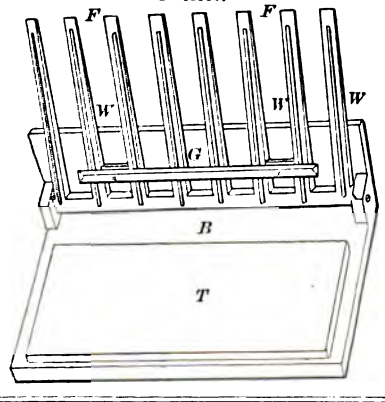

90116—C. W. Mills—*Grain Bin.*

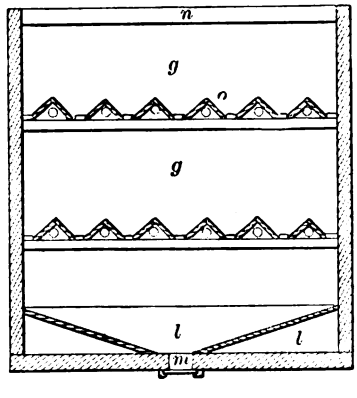

90117—T. Nevison—*Fence.*

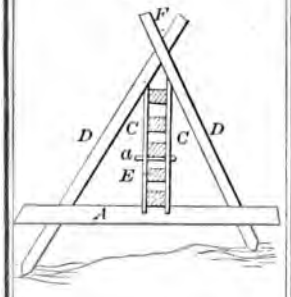

90118—E. Osgood—*Compound for Shoes, &c.*

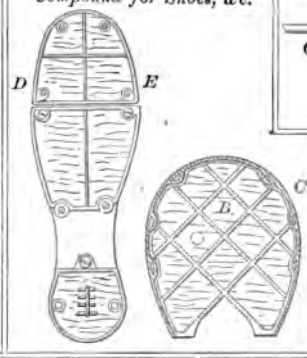

90120—P. M. Papin—*For Ageing Spirits.*

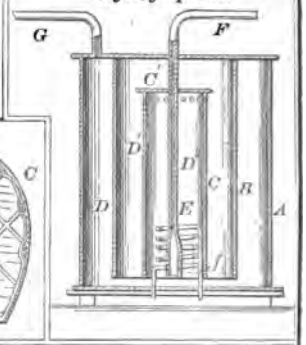

90119—O. Paddock—*Button.*

90122—A. G. Perry—*Eaves Trough Supporter.*

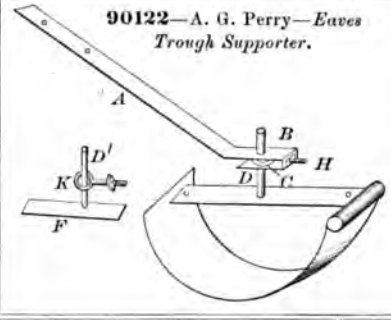

90123—T. Poore—*Fluid Meter.*

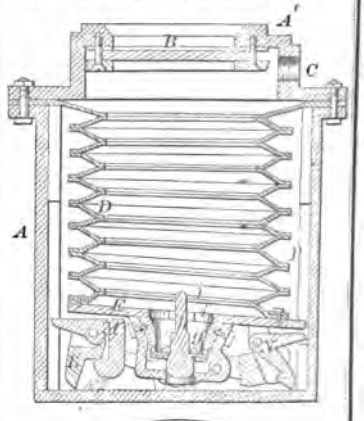

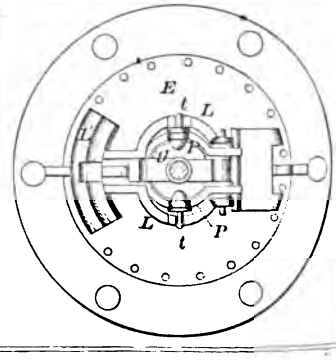

90125—Robinson & Silver—*Saw Filing Machine.*

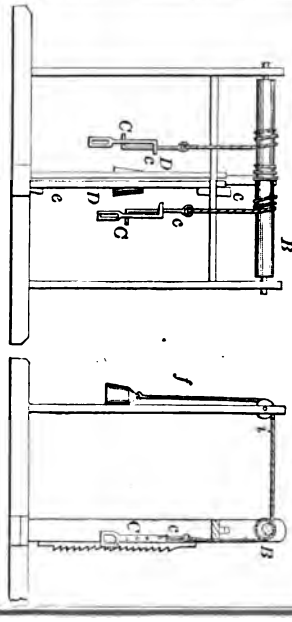

90121—E. Parker—*Key.*

90124—Probeck & Corlett—*Invalid Table and Book Holder.*

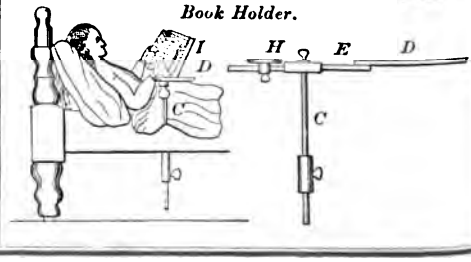

90126—G. L. Scott—*For Moulding Pulleys.*

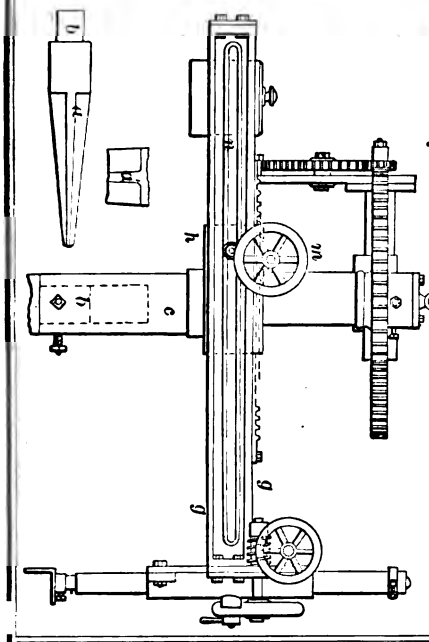

90129—W. N. Shellabarger—*Feed Trough.*

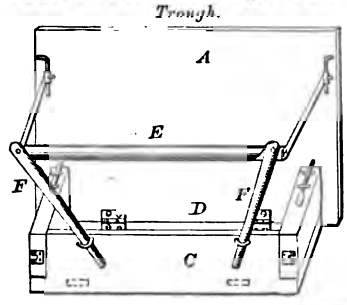

90131—Staats, Schwanke & Stadler—*Land Roller.*

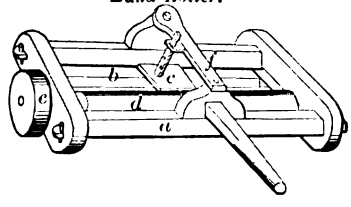

90127—T. Shaw—*Water Heater.*

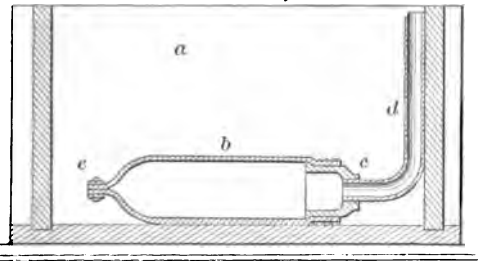

90128—T. Shaw—*Hot Air Engine.*

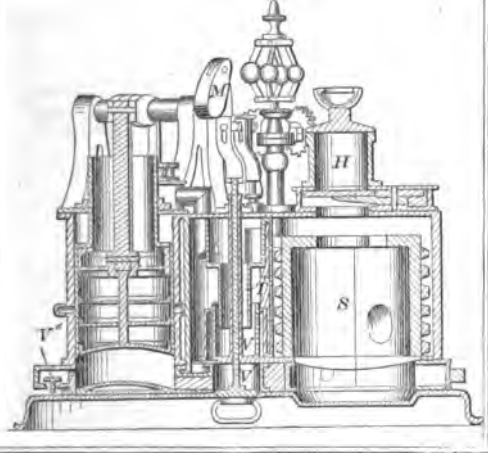

90132—G. C. Stamper—*Nut Lock.*

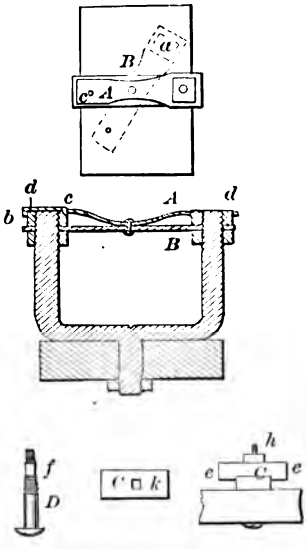

90133—E. S. Stimpson—*For Lubricating Temples for Looms.*

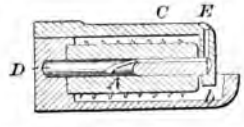

90130—S. P. Sleppy—*Sewing Machine.*

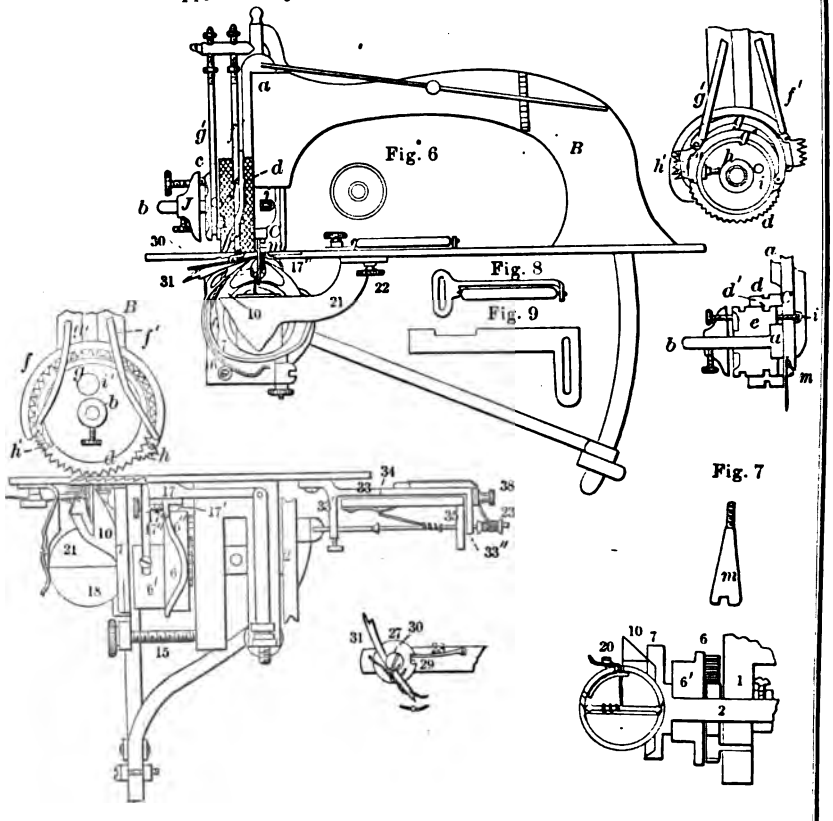

90135—J. F. Travis—*Lamp Shade.*

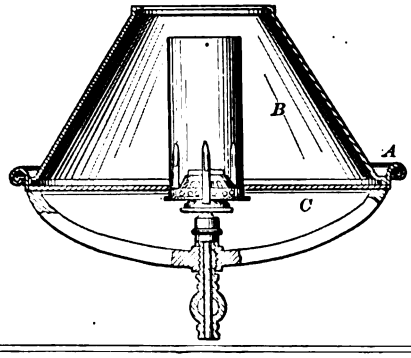

90134—T. R. Timby—*Umbrella Fastening.*

90137—A. C. Twining—*Detachable Caster Fixture.*

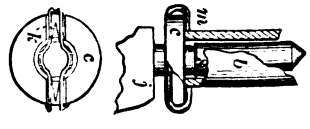

90136—W. L. Truland—*Cutting Pliers.*

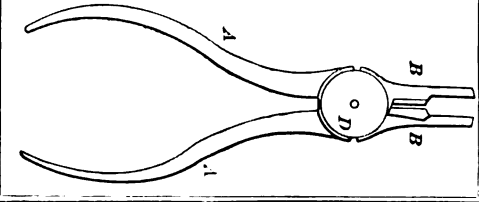

90138—W. V. Van Syckel—*Fence Gauge.*

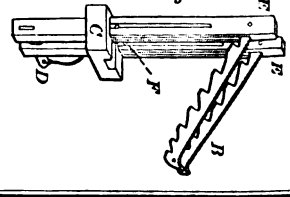

90139—W. H. Wall—*Driving Rein and Bridle.*

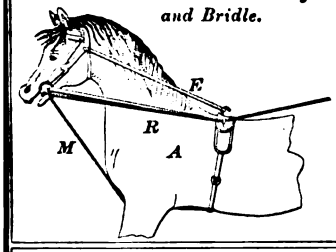

90140—Walz & Pendleton—*For Carbonate of Soda.*

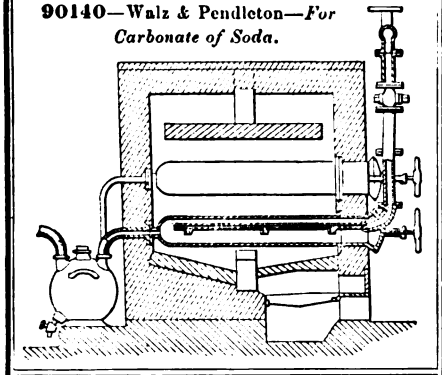

90141—D. Wells—*Stove.*

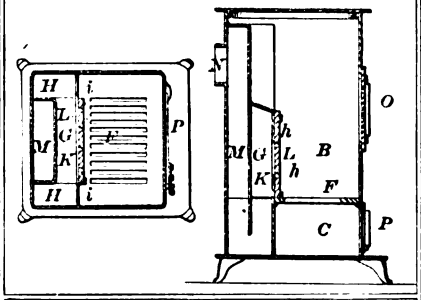

90143—P. Wineman—*Pump.*

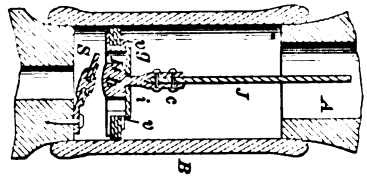

90142—Wheeler & Rouse—*Potato Digger.*

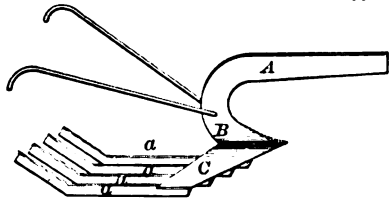

90144—A. E. Wolcott—*Carriage Spring*

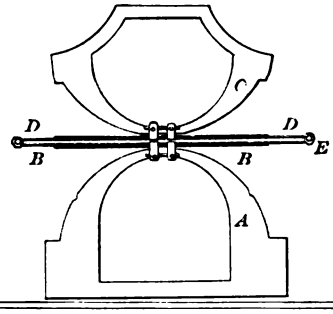

90145—A. E. Wolcott—*Carriage Spring.*

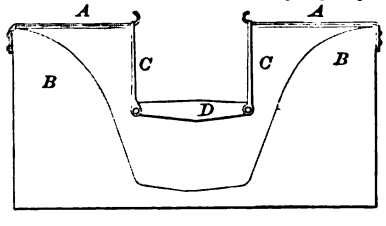

90146—A. E. Wolcott—*Carriage Spring.*

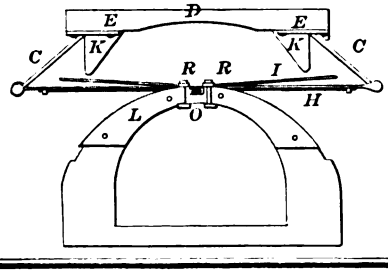

90147—J. Zeller—*Wagon Jack.*

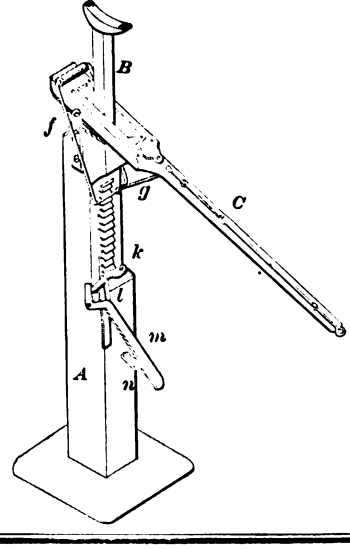

90148—C. Anthony—*For Gaff Top Sails.*

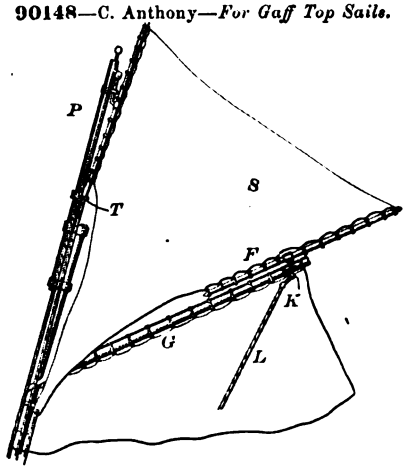

90149—D. S. Bigler—*Horse Hay Fork.*

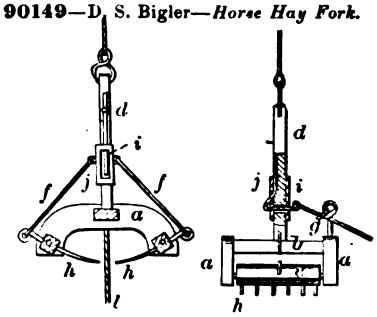

90151—Bond & Wroath—*Screw Plate.*

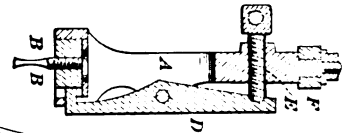

90152—A. P. Boren—*Baling Press.*

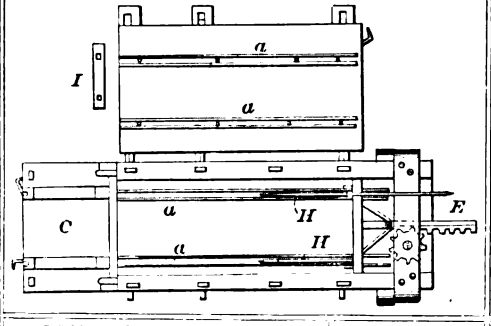

90153—G. E. Brettell—*Mop Head.*

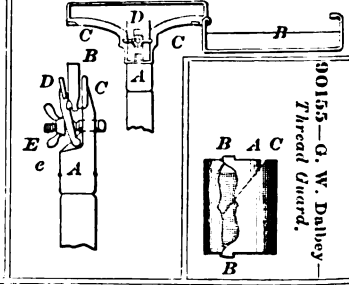

90155—G. W. Dalbey—*Thread Guard.*

90150—Bloomfield & Otis—*Piano Forte.*

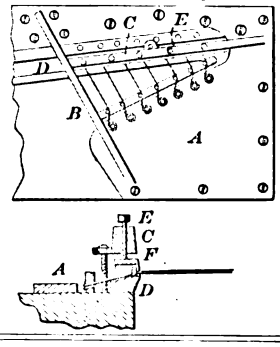

90154—W. Byron—*Ornamental Articles.*

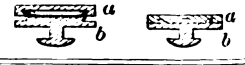

90156—R. Daniels—*Shaft Bearing.*

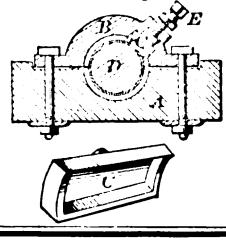

90157—Devins & Gravatt—*Tube Well Pump.*

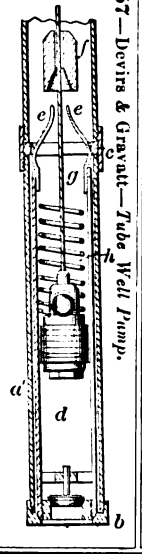

90158—P. A. Dormoy—*For Puddling Iron.*

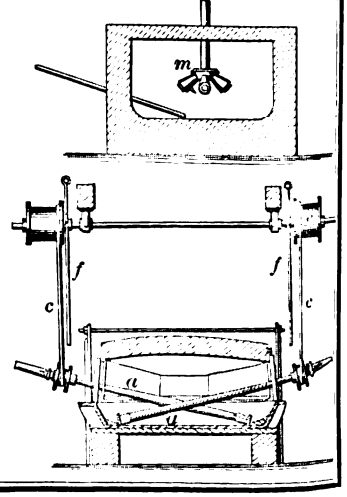

59—W. C. C. Erskine—*Coffee Pot.*

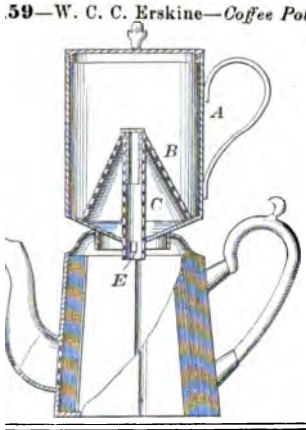

90161—G. P. Fuller—*Railway Chair.*

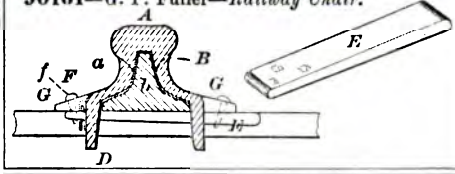

90162—A. Fulton—*For Closing Gas Retorts.*

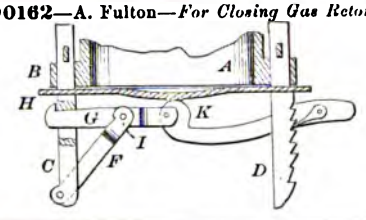

0163—T. Gamble—*Saw Grinding Machine.*

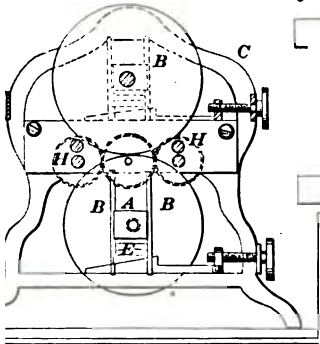

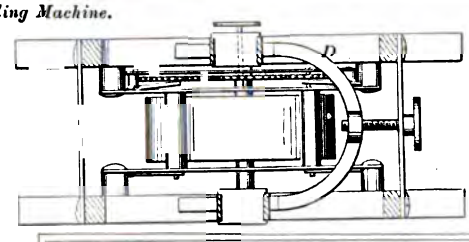

90164—T. D. Gibson—*Projectile.*

0166—C. R. Gorgas—*Pessary.*

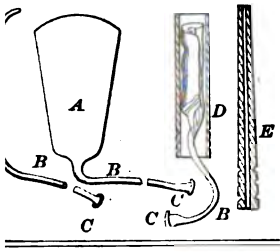

90165—J. Godfrey—*Iron Last.*

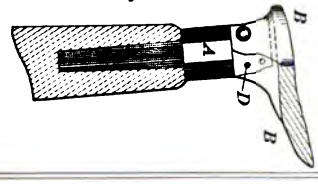

90167—T. G. Hall—*Water Wheel.*

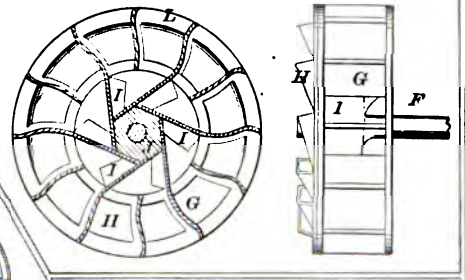

90169—L. O. Hayworth—*Corn Planter.*

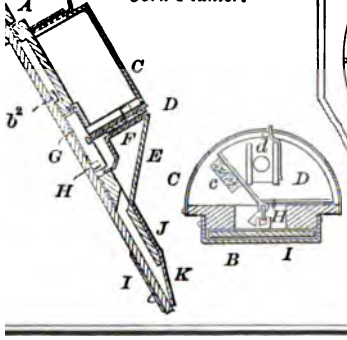

90168—G. Harrison—*Pen Holder.*

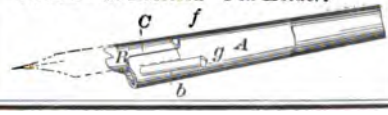

90170—G. W. Hobart—*For Stuffing Horse Collars.*

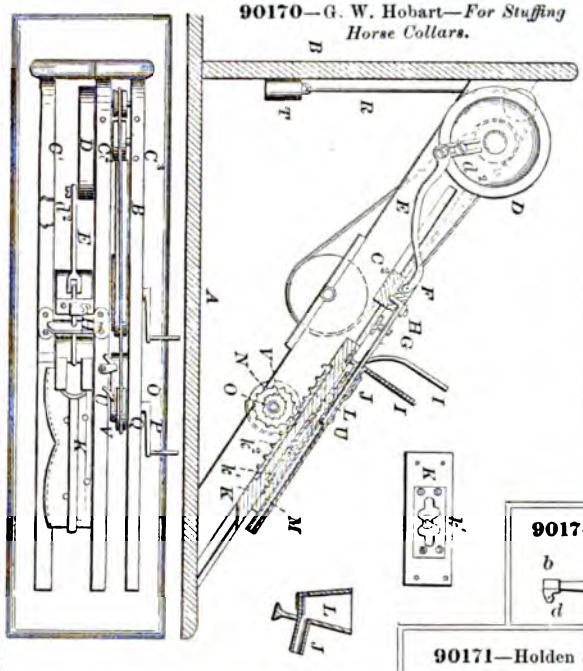

90172—J. Hollingsworth—*Horse Stall Floor.*

90174—W. Hull—*Neck Yoke.*

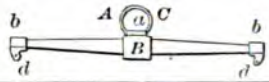

90171—Holden & Brockett—*Bed Bottom.*

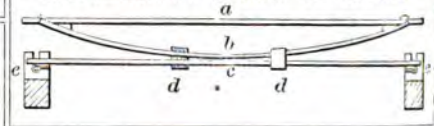

90173—L. Holms—*Alarm Bell.*

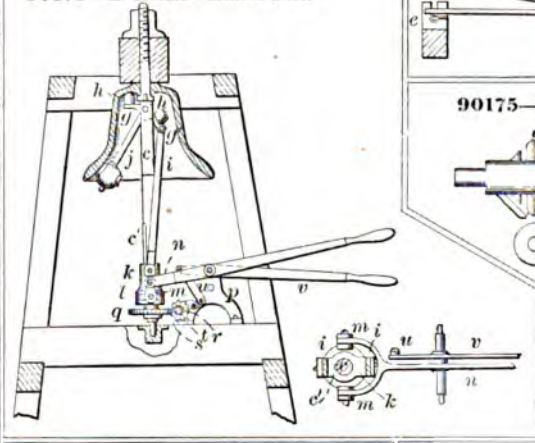

90175—W. D. Jones—*Corn Husker.*

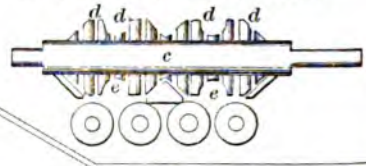

90176—J. L. Judge—*Steam Heater.*

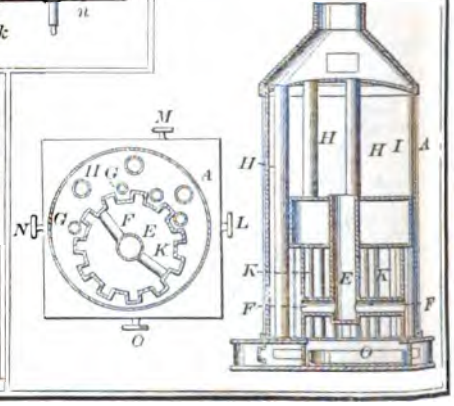

90177—R. D. King—*Shutter and Awning.*

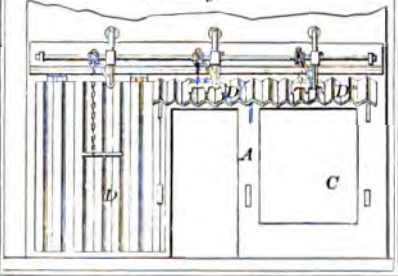

90178—J. W. Lewis—*Plow.*

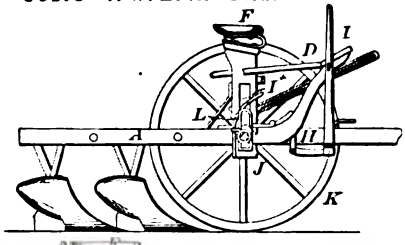

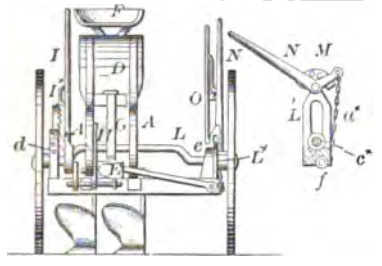

90180—M. E. Meade—*Ventilator.*

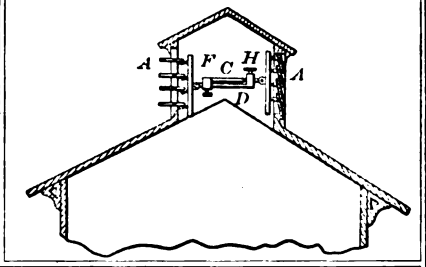

90182—Michaels & Croskey—*Horse Power.*

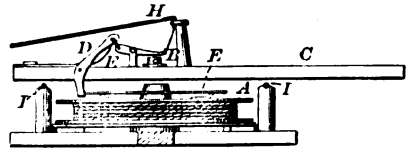

90181—T. J. Mell—*Car Ventilator.*

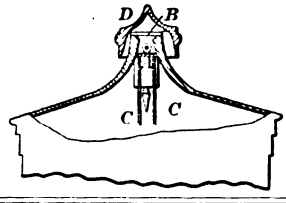

90185—S. W. & J. F. Palmer—*Clothes Wringer.*

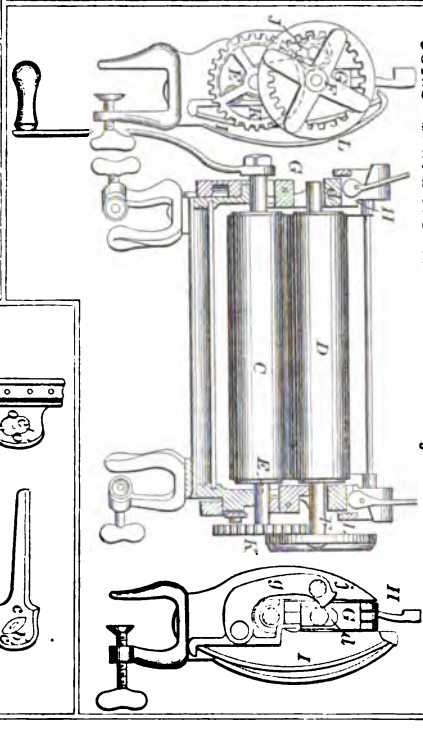

90183—D. H. Nation—*Seat.*

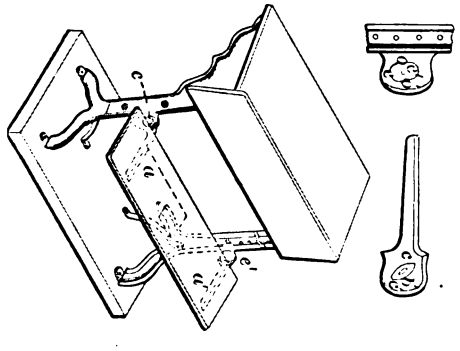

90184—J. Nichol—*Shears.*

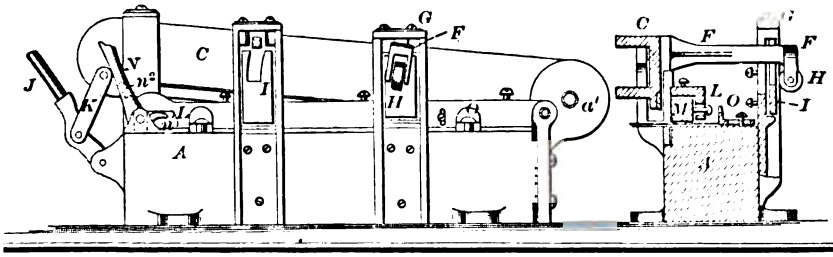

90186—A. Peirce—*Wagon Brake.*

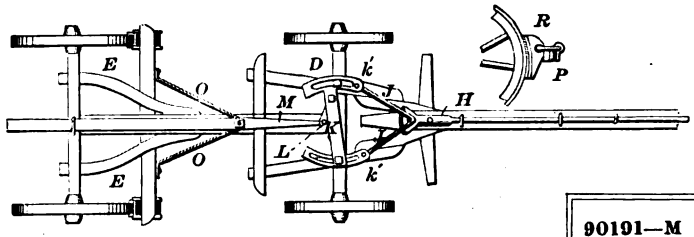

90187—J. D. Perkins—*Alarm Cash Box.*

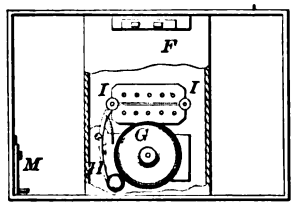

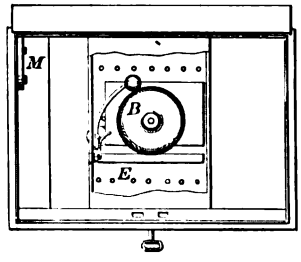

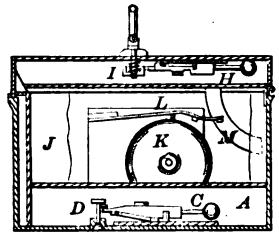

90188—C. Perley—*Sash Fastening.*

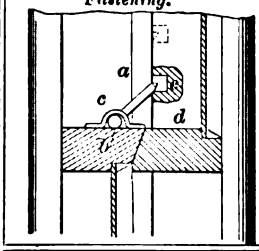

90189—J. Pfitzinger—*Elevator Bucket.*

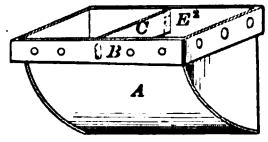

90190—A. Phinney—*Die Holder.*

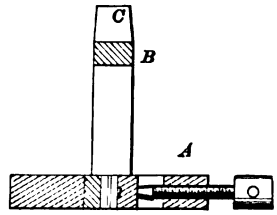

90191—M F. Potter—*Abdominal Supporter.*

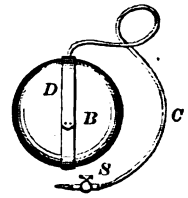

90195—H. J. Rickard—*Auger.*

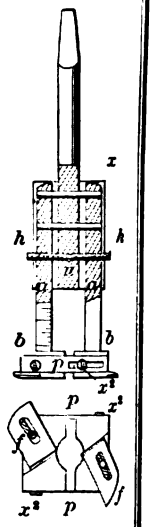

90193—Prud'homme & Leprohon—*Door.*

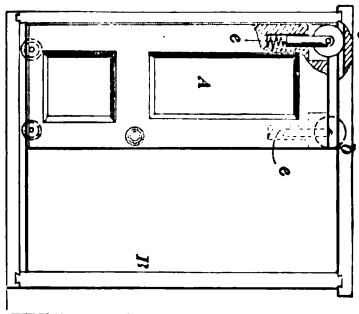

90194—B. M Quint—*Fruit Protector.*

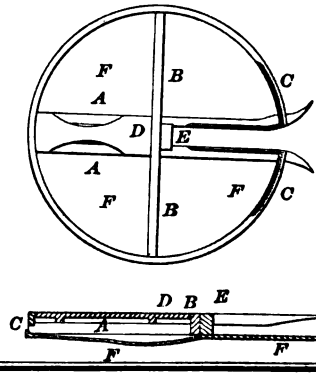

90206—C. E. Sweney—*Thill Coupling.*

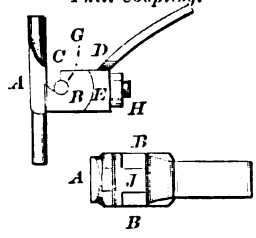

90209—Waterman & Porter—*Attaching Roses to Door Knobs.*

Fig. 1

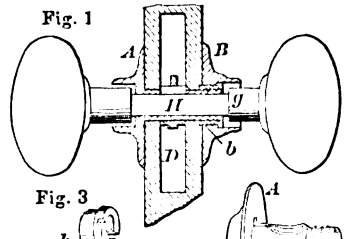

Fig. 3

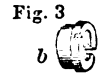

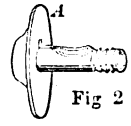

Fig 2

90213—H. O. Winsor—*Snatch Block.*

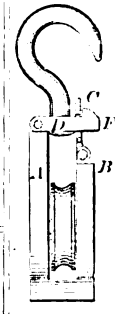

90211—O. H. Weed—*Carpet Sweeper.*

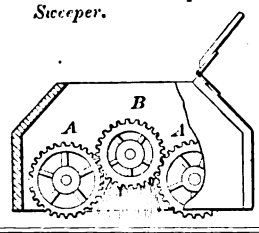

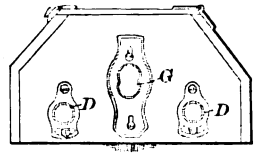

90212—W. Whiteside—*Loom.*

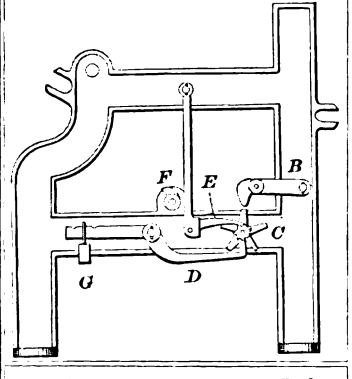

90210—J. W. Webb—*Cotton Gin.*

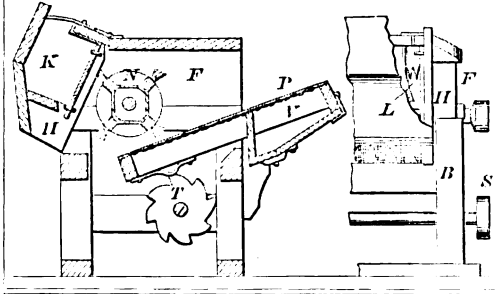

90215—J. B. Alexander—*Siphon Bottle.*

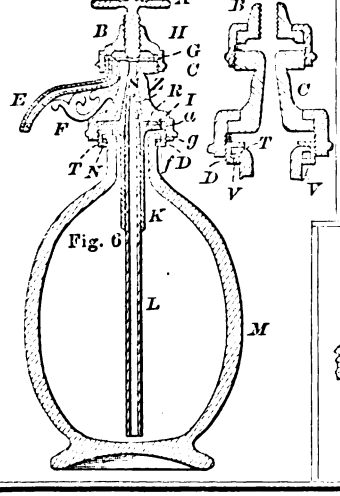

Fig. 6

90214—F. Wohlgemuth—*Fire Arm.*

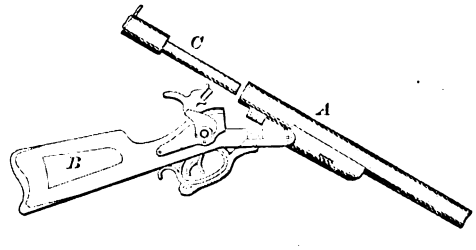

90216—W. P. Anderson—*Car Connection.*

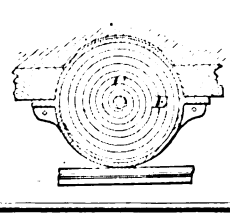

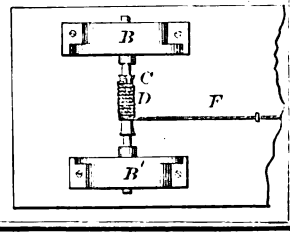

90217—B. H. Aylworth—*Vaginal Speculum.*

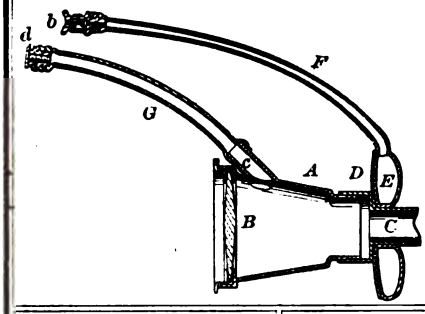

90218—R. Bailey—*For Stoves.*

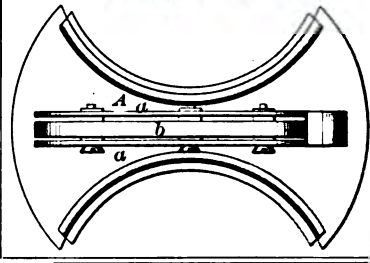

90219—T. F. Baker—*Prison Grating.*

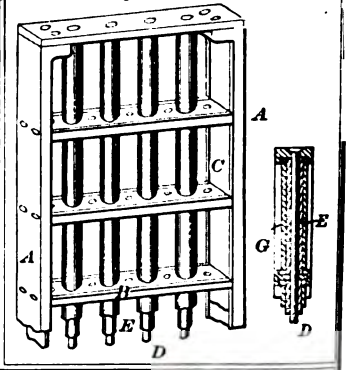

90220—Baldwin & Miller—*Velocipede.*

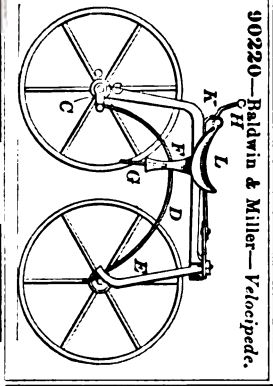

90221—L. M. Ballard—*Locking Cap for Bottles.*

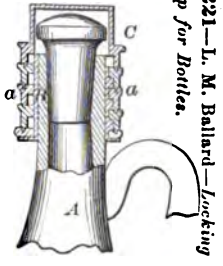

90222—Bartholomew & Chapman—*Harrow.*

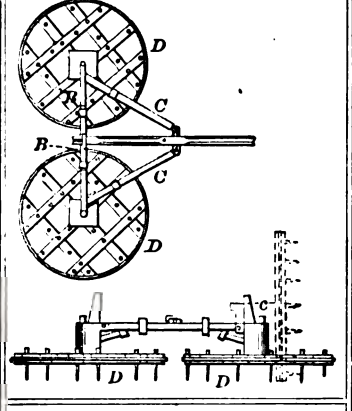

90223—Bergner & Netzow—*Lubricator.*

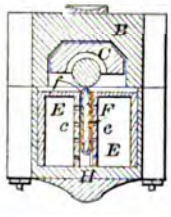

90224—W. J. Berne—*Horse Shoe Calk.*

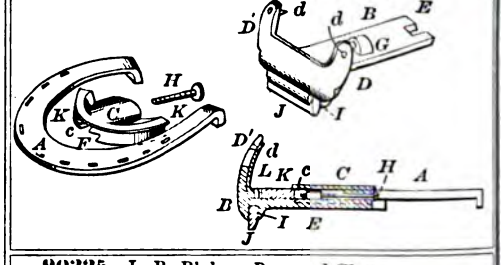

90225—L. R. Blake—*Boot and Shoe.*

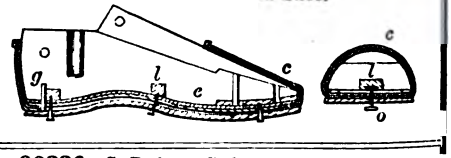

90226—S. Boden—*Safety Valve.*

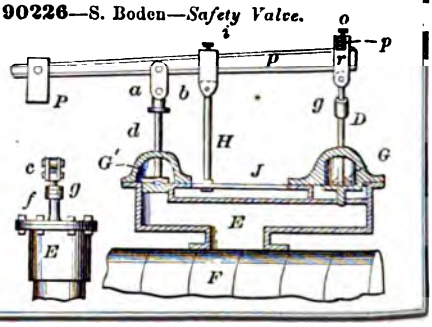

90227—R. Boehm—*Ore Washer.*

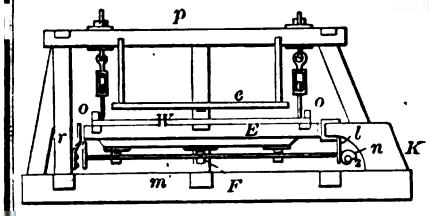

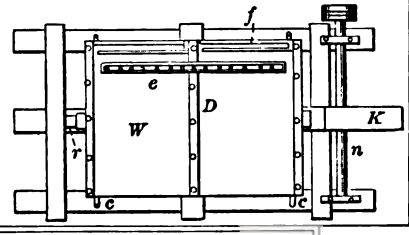

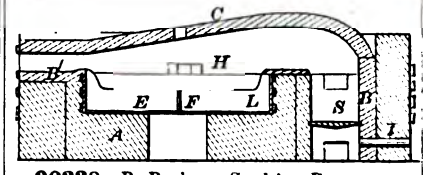

90228—R. Boehm—*Smelting Furnace.*

90229—H. D. Bolt—*Spring Bed Brace*

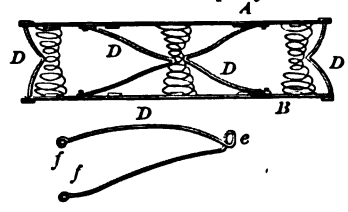

90230—D. Brookwalter—*Corn Husker.*

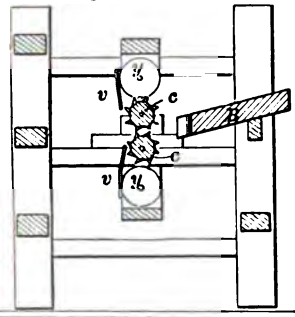

90231—G. Bradshaw—*Washing Machine.*

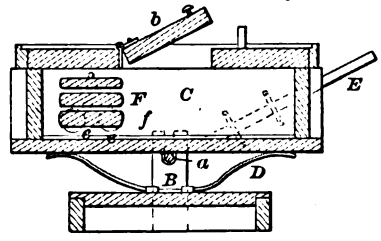

90232—T. E. C. Brinly—*Plow*

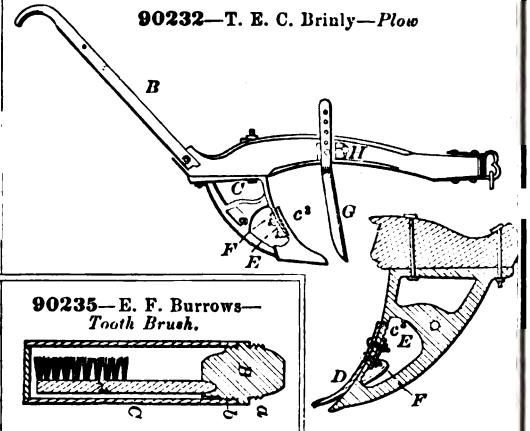

90233—A. S. Brown—*Horse Hay Fork.*

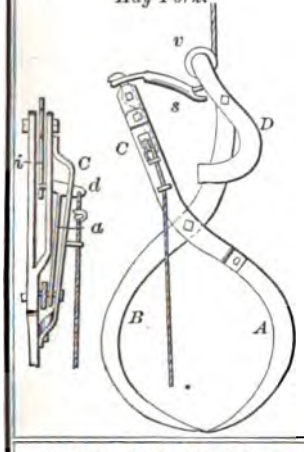

90235—E. F. Burrows—*Tooth Brush.*

90234—Bullard & Holmes—*For Tea and Coffee Pots.*

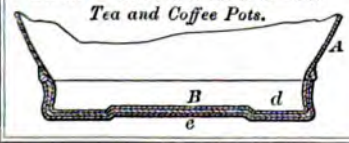

90237—G. R. Carter—*Plow.*

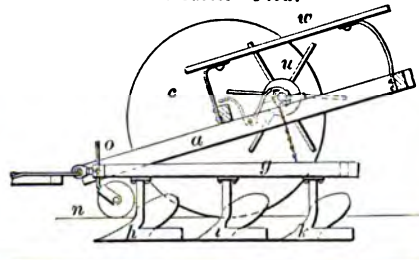

90236—M. K. Carpenter—*Hoisting Machine.*

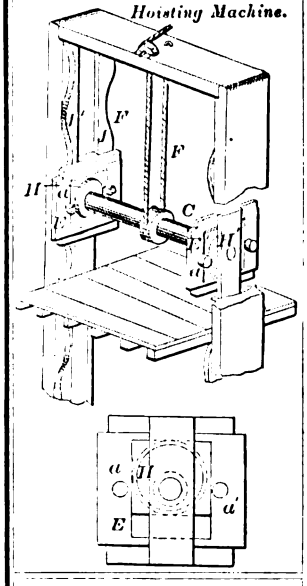

90239—E. S. Chase—*Saw Dust Burner.*

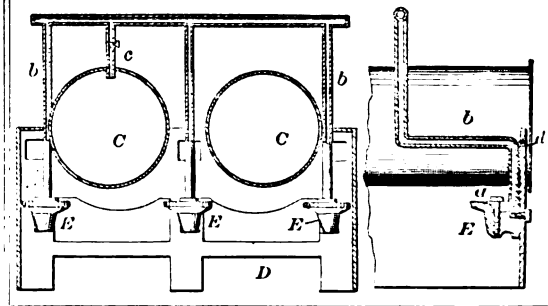

90242—H. C. Dart—*Beer Cooler.*

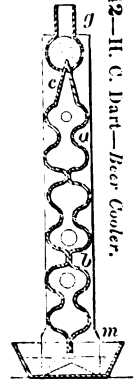

90238—J. A. Casey—*Water Purifier and Cooler.*

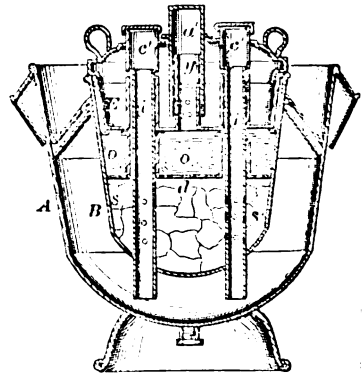

90240—J. B. Cornell—*Skylight.*

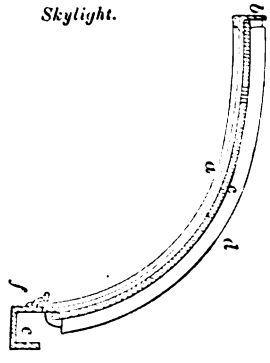

90243—A. Day—*Ice Tongs.*

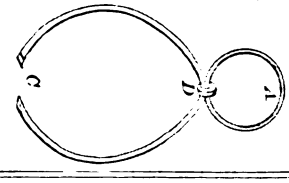

90244—S. B. Dean—*Ordnance.*

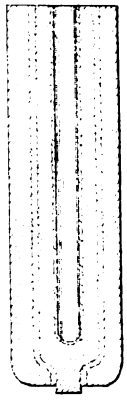

90241—T. Daly—*Railroad Switch and Signal.*

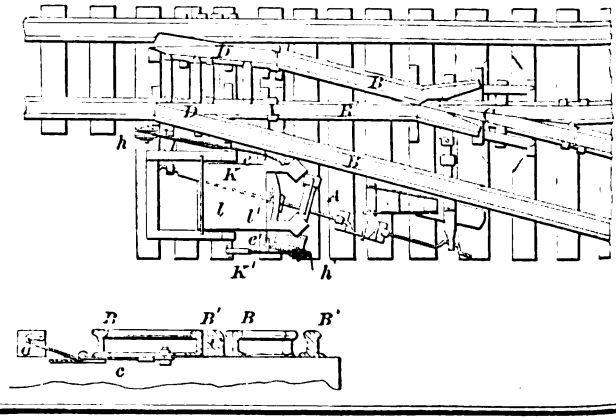

90227—R. Boehm—*Ore Washer.*

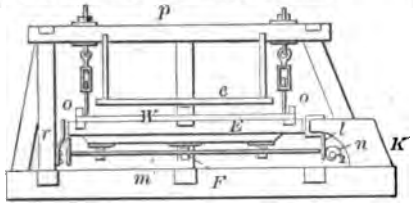

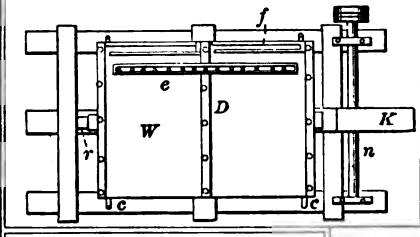

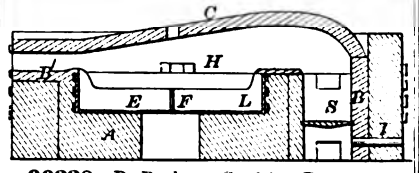

90228—R. Boehm—*Smelting Furnace.*

90229—H. D. Bolt—*Spring Bed Brace*

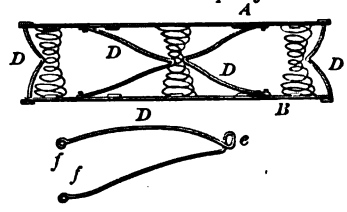

90230—D. Brookwalter—*Corn Husker.*

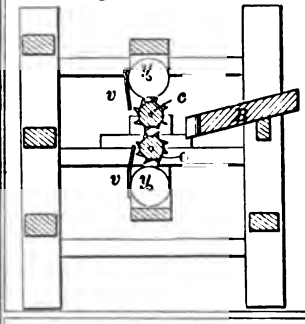

90231—G. Bradshaw—*Washing Machine.*

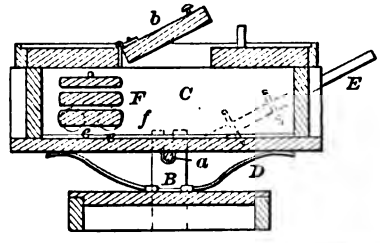

90232—T. E. C. Brinly—*Plow*

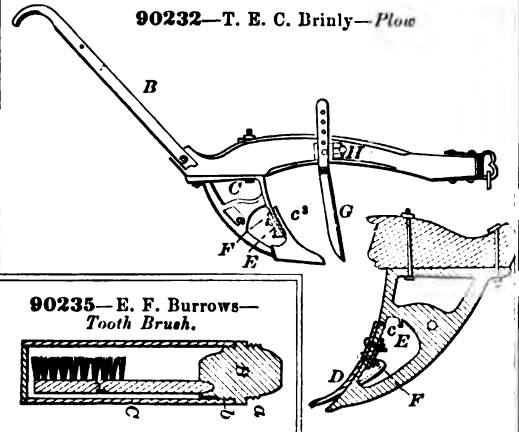

90233—A. S. Brown—*Horse Hay Fork.*

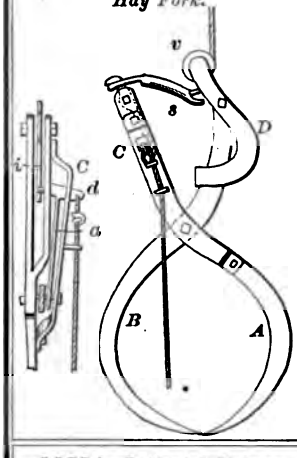

90235—E. F. Burrows—*Tooth Brush.*

90234—Bullard & Holmes—*For Tea and Coffee Pots.*

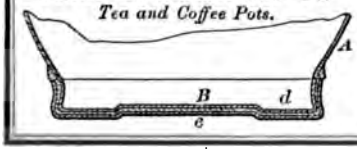

90237—G. R. Carter—*Plow.*

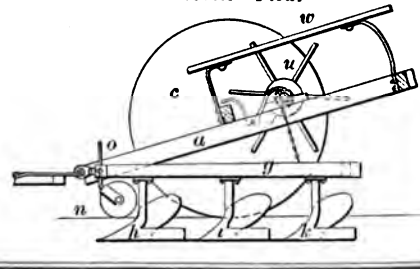

90254—E. E. Furney—*Mechanical Movement.*

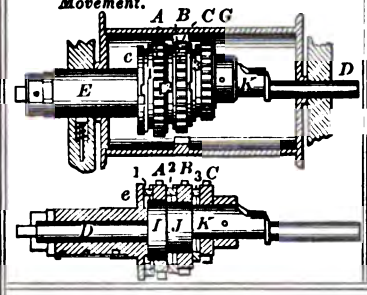

90255—Gallup & Hewitt—*Churn.*

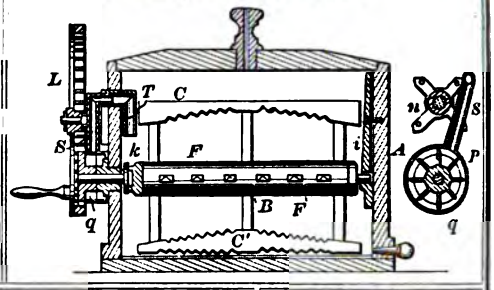

90258—C. Green—*Stove.*

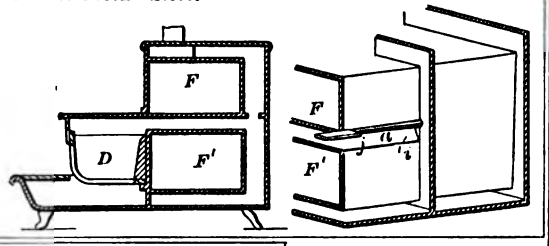

90256—J. A. Glenn—*Horse Hay Fork.*

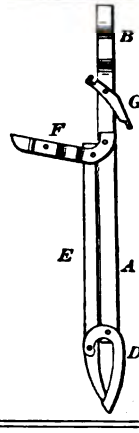

90260—G. F. Harlan—*Grain Separator.*

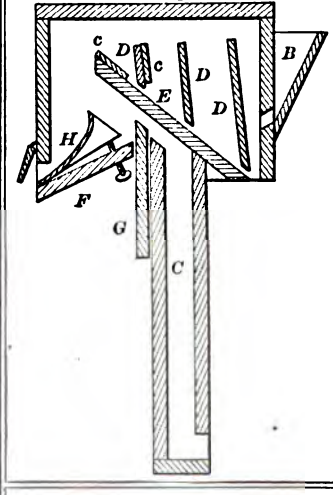

90259—C. C. Hare—*Gas Machine.*

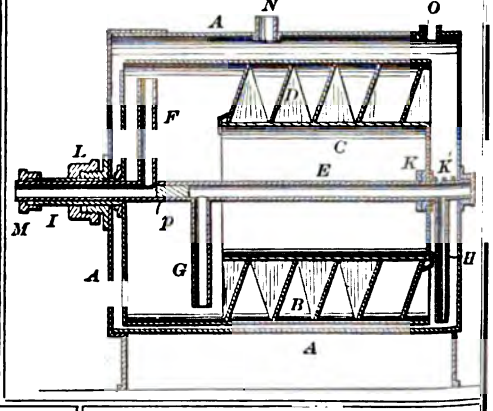

90261—H. P. Haskin—*Gate.*

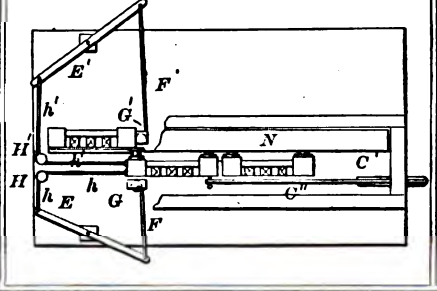

90262—W. Hebdon—*Cloth Measuring Machine.*

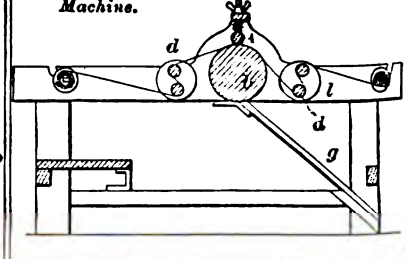

90245—J. G. Dillaha—*Horse Power.*

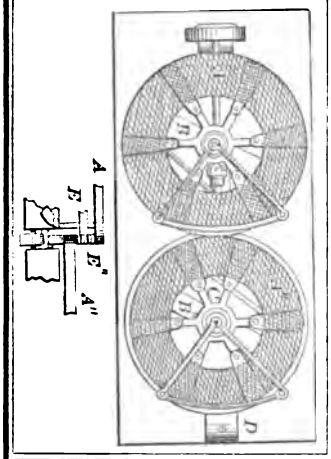

90246—H. B. Durfee—*Plow.*

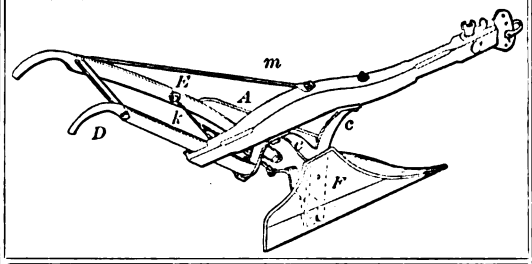

90247—P. Dyer, Jr.—*Harvester.*

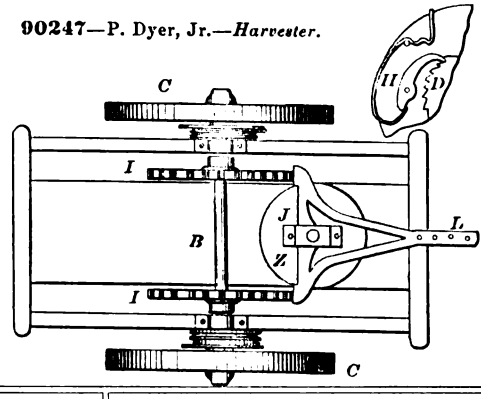

90248—G. A. Eyars—*Grate Bar.*

90249—D. Eynon—*For Removing Burrs from Railroad Chairs.*

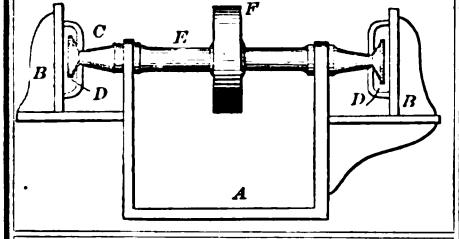

90250—J. Fanning—*Washing Machine.*

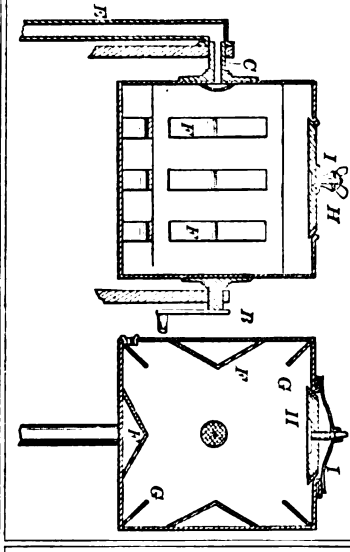

90252—J. A. French—*Shoe Pattern.*

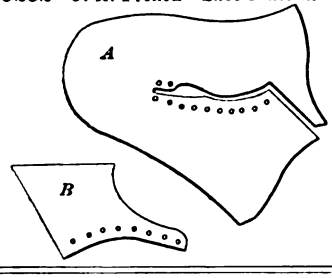

90251—Frary & Sherwin—*Water Wheel.*

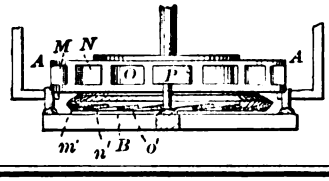

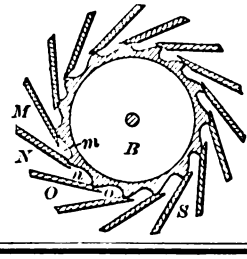

90269—F. G. Jenkins—*For Lead Pencils.*

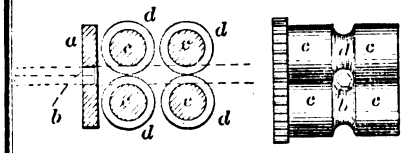

90270—C. S. Jones—*Telegraphic Switch Board.*

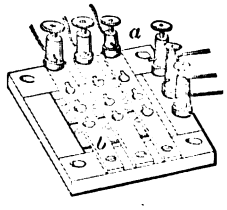

90272—M. Kerr—*Railroad Switch.*

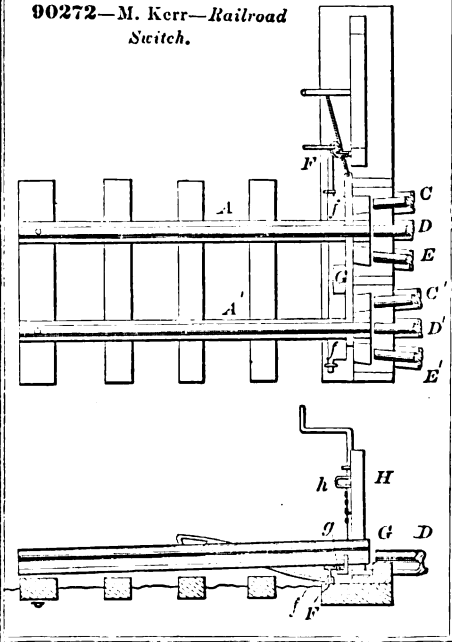

90271—I. Kennedy—*Plow.*

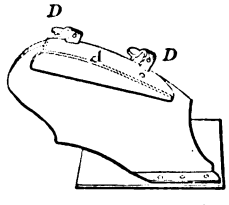

90273—W. A. Kirby—*Harvester.*

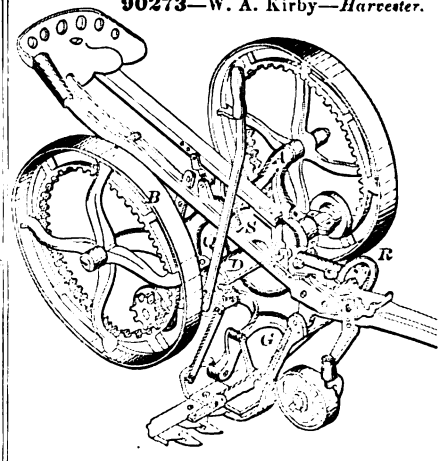

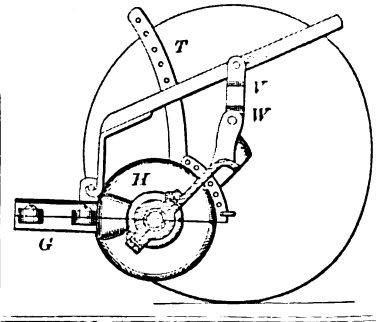

90274—F. L. Kirtley—*Plow Carrier and Cotton Chopper.*

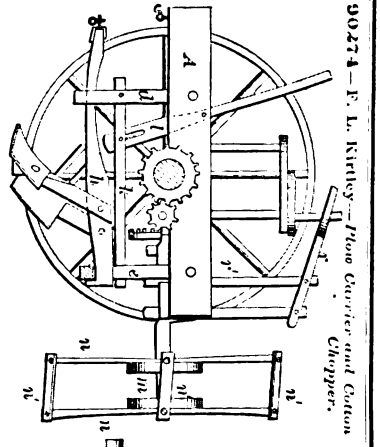

90275—H. Kummer—*Computing Tablet.*

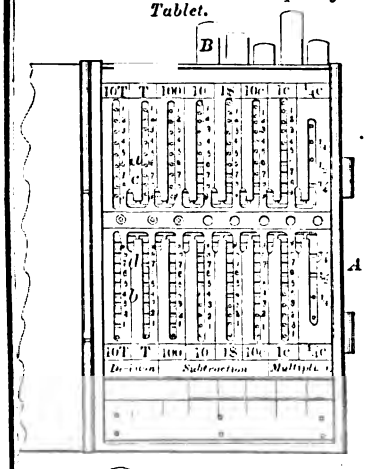

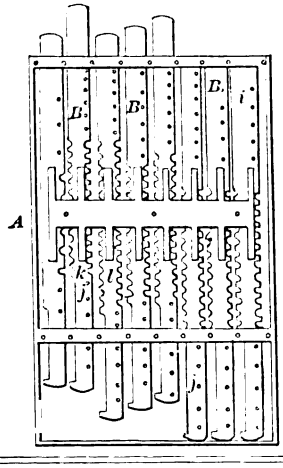

90276—P. W. Lambert—*Sewing Case and Pocket Book.*

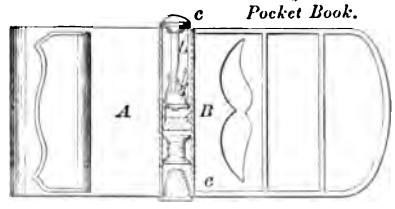

90277—S. P. Lionberger—*Ground Marker.*

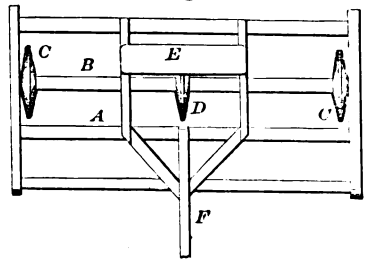

90278—J. Linnard—*Safety Valve.*

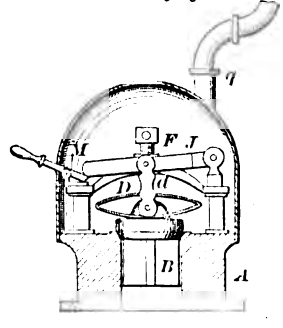

90279—J. D. Lynde—*Safety Valve.*

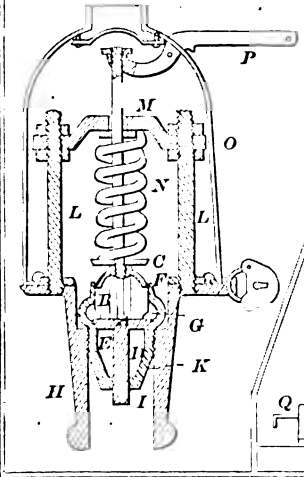

90280—R. McFarlane—*Fence.*

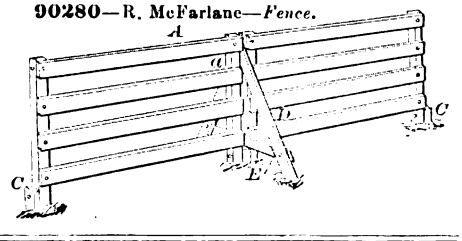

90281—J. Matheis—*For Punching Leather Straps.*

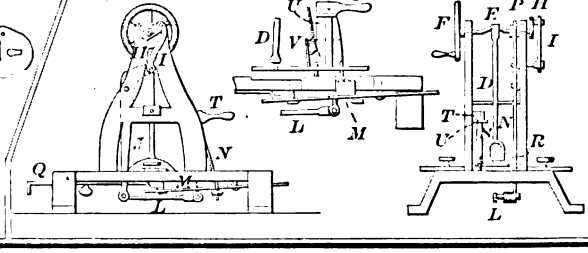

90282—T. T. McGrath—*Skate Runner.*

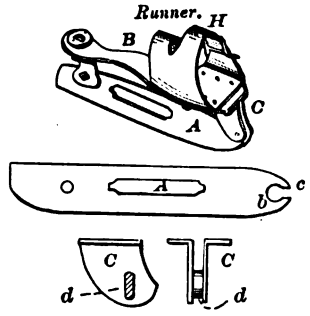

90283—M. Mac Kenzie—*Key Hole Guard.*

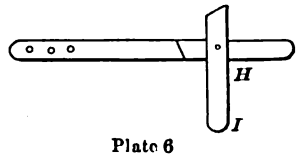

Plate 6

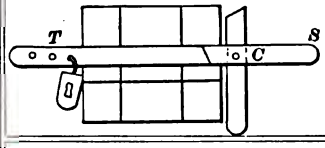

90285—G. A. Metcalf—*Brick Press.*

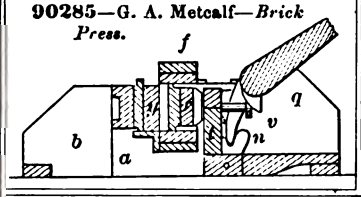

90284—J. Merrill—*For Manufacturing Deodorized Oils.*

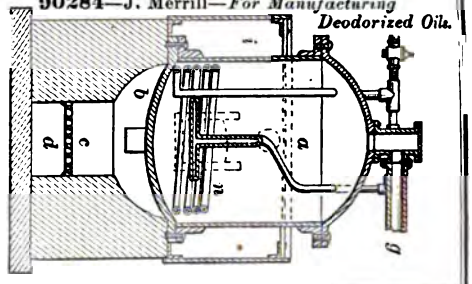

90286—S. D. Milam—*Horse Rake.*

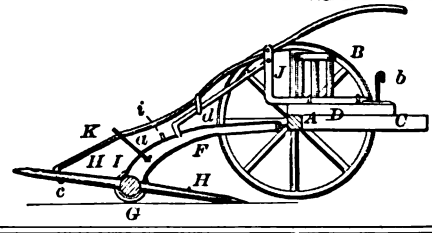

90288—W. T. Munger—*Latch.*

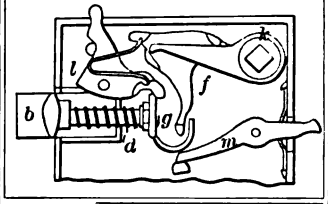

90290—J. F. Nagel—*Car Coupling.*

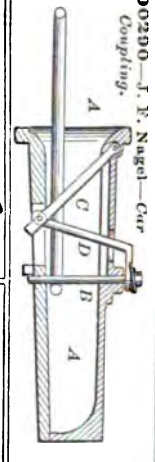

90289—L. B. Myers—*Pencil Sharpener.*

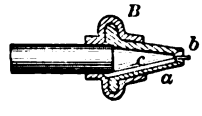

90292—S. H. Ostrom—*Hand Drill.*

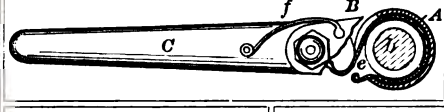

90287—C. M. Mitchell—*Lamp Shade Holder.*

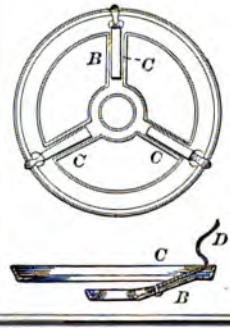

90291—H. Ogborn—*Grain Separator.*

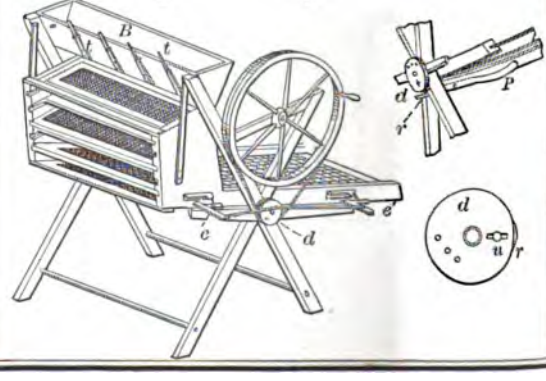

90293—P. Parádis—*Stove.*

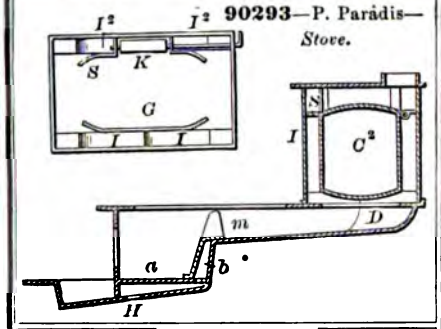

90294—J. Parlane—*Governor.*

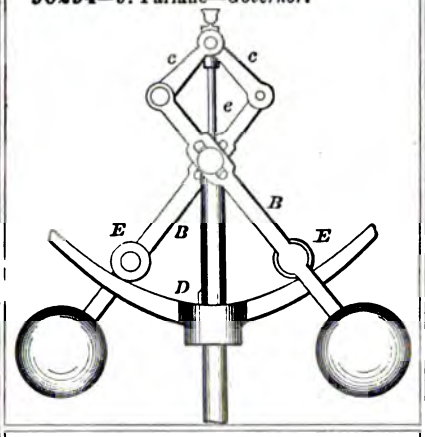

90295—G. Pedersen—*Straw and Feed Cutter.*

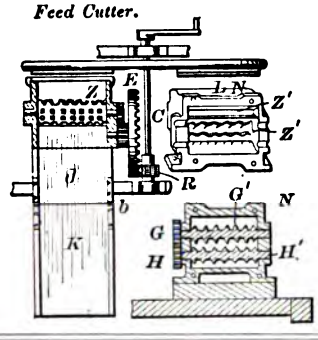

90296—B. C. Perry—*For Polishing Wood Mouldings, &c.*

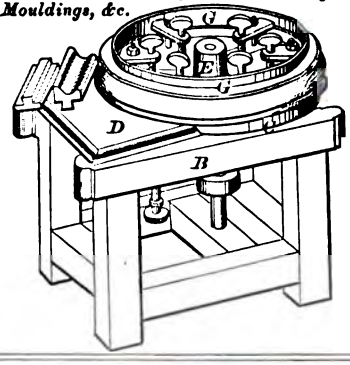

90298—Peters & Clem—*Privy Seat.*

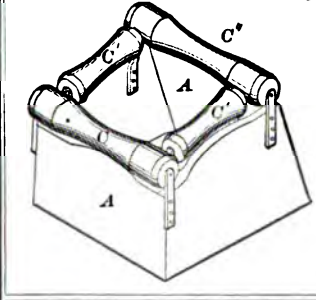

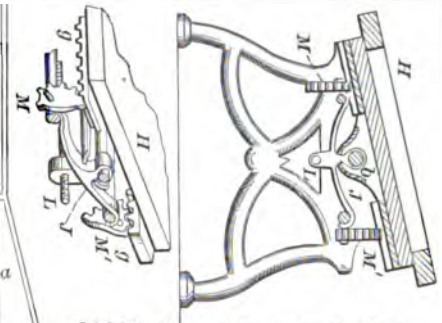

90297—Perry & Billings—*Car Seat.*

90300—D. Philips—*Fence.*

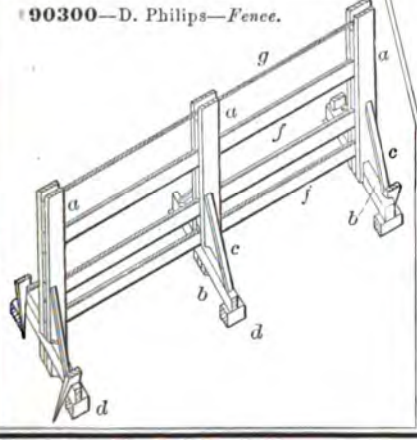

90299—F. P. Pfleghar—*Guide for Fitting Locks to Doors.*

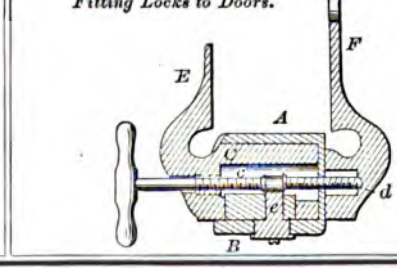

90302—W. H. Racey—*For Connecting Velocipedes.*

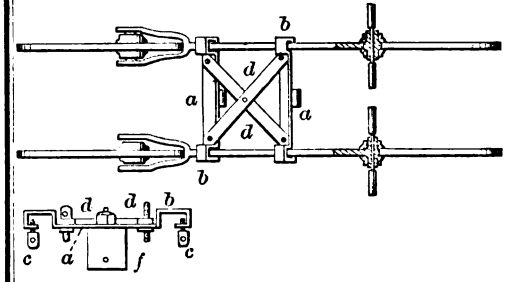

90303—C. D. Read—*Bed Bottom.*

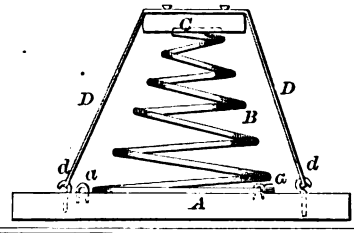

90306—G. H. Rich—*For Separating Cockle from Wheat.*

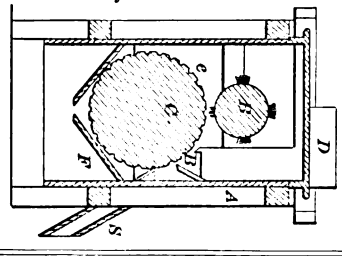

90307—B. Riley—*Pipe Tongs.*

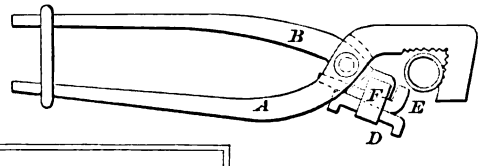

90305—F. W. Reilly—*Handle for Weight Lifting Apparatus.*

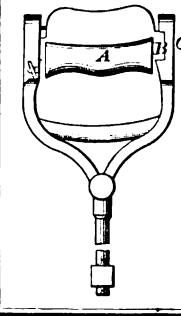

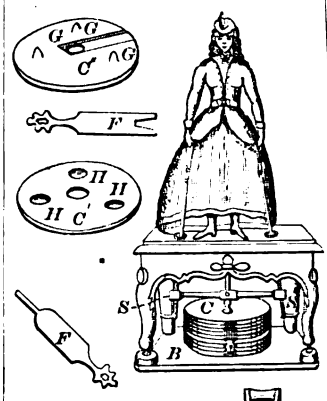

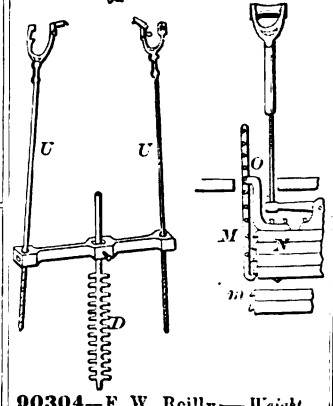

90304—F. W. Reilly—*Weight Lifting Apparatus.*

90309—J. S. Ross—*Washing Machine.*

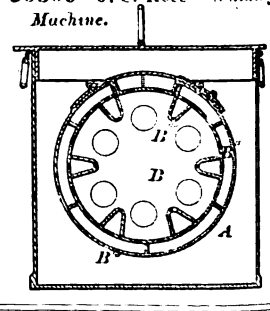

90310—F. Rourk—*For Operating Velocipedes.*

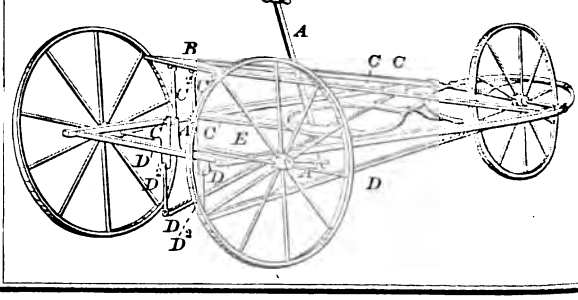

90311—J. Russell—*Corn Husker.*

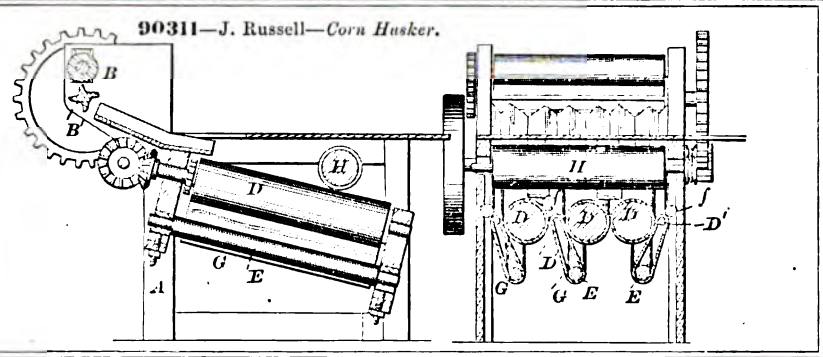

90313—W. A. Shaw—*Converting Iron into Steel.*

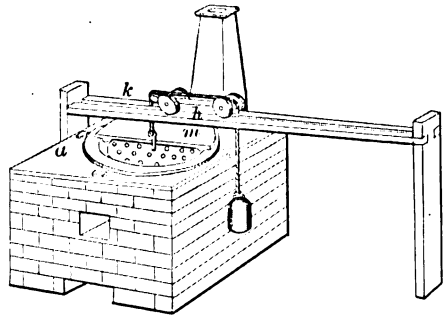

90315—I. Sherck—*Jack for Threshing Machines.*

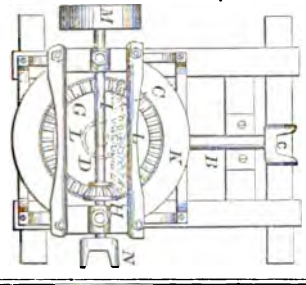

90316—W. H. Simmons—*Fire Escape.*

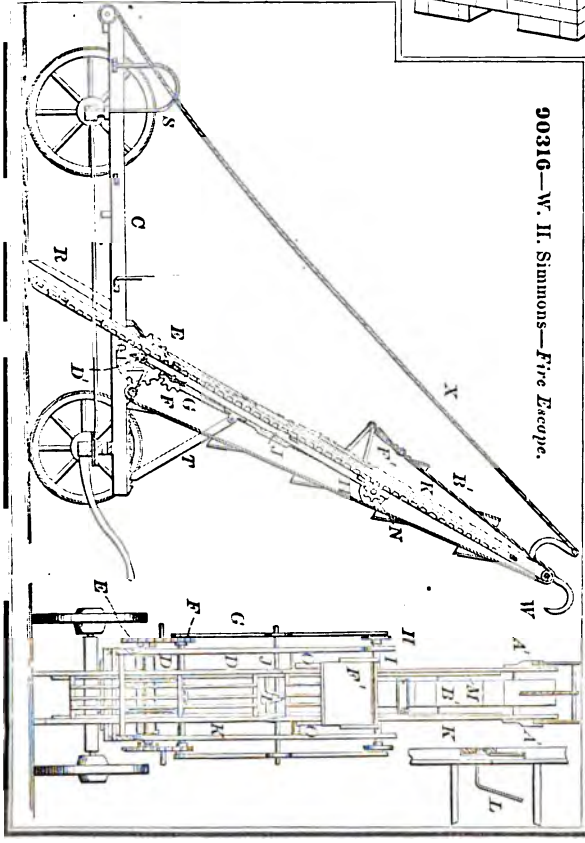

90314—W. A. Shaw—*Tempering Steel Wire.*

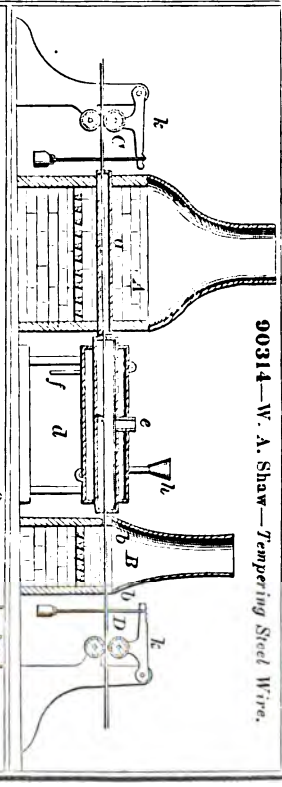

90317—J. D. Smith—*Axle.*

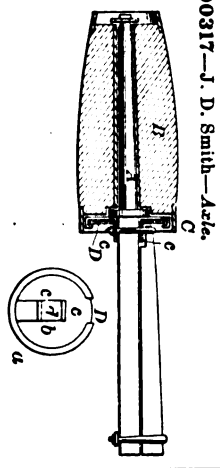

90318—J. J. C. Smith—*Casting Metals under Pressure.*

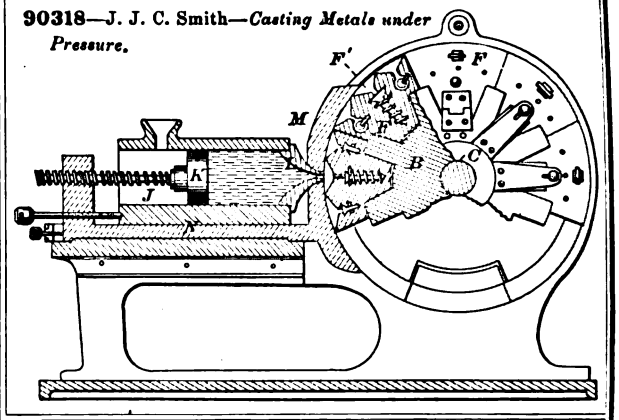

90319—W. Somers—*Garden Implement.*

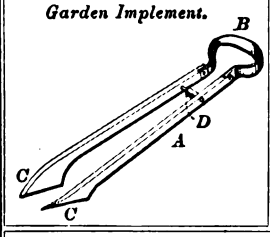

90320—P. H. Turner—*Sawing Machine.*

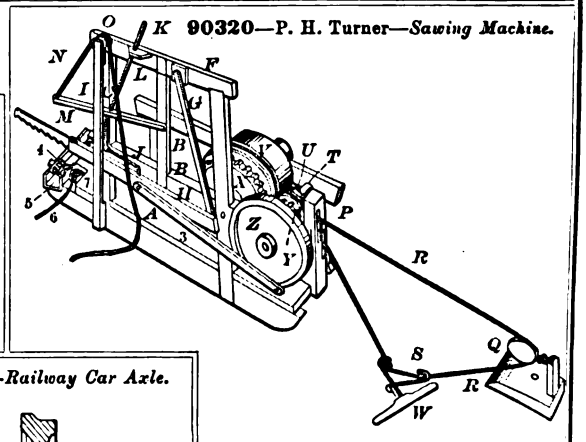

90321—J. Van Slooten—*Railway Car Axle.*

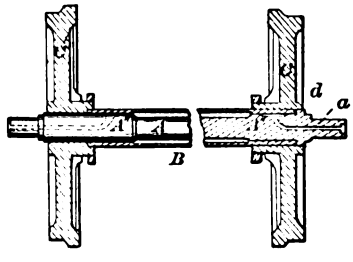

90322—S. Vanstone—*Metal Tube.*

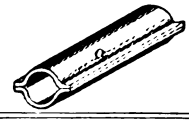

90323—J. Vavasseur—*Lock for Ordnance.*

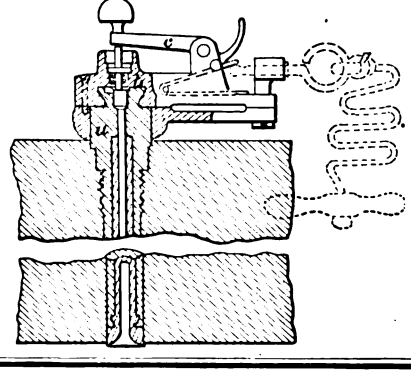

90326—D. Wilcox—*Body Loop Head for Carriages*

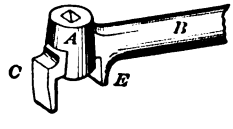

90329—H. S. Wing—*Bedstead Fastener.*

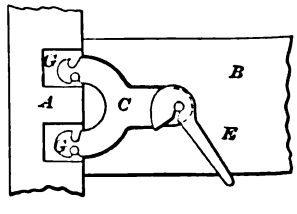

90311—J. Russell—*Corn Husker.*

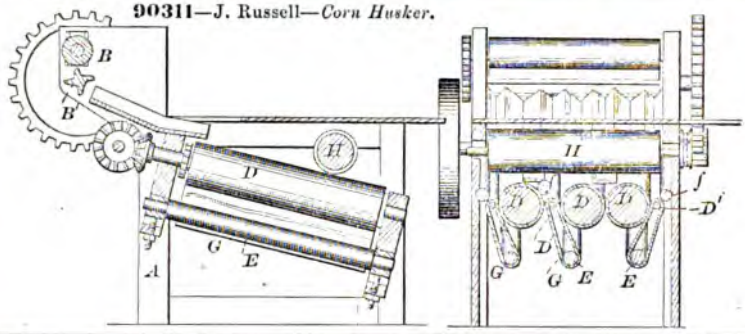

90313—W. A. Shaw—*Converting Iron into Steel.*

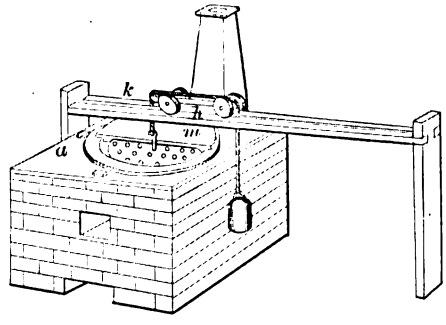

90315—I. Sherck—*Jack for Threshing Machines.*

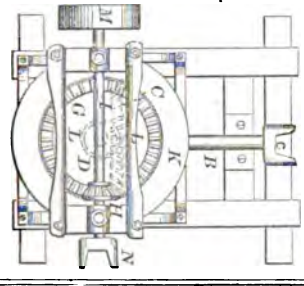

90316—W. H. Simmons—*Fire Escape.*

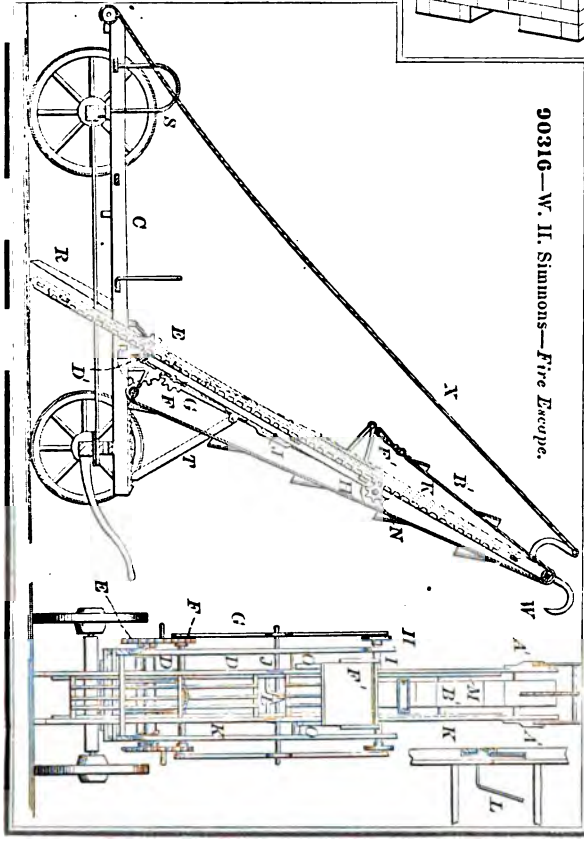

90314—W. A. Shaw—*Tempering Steel Wire.*

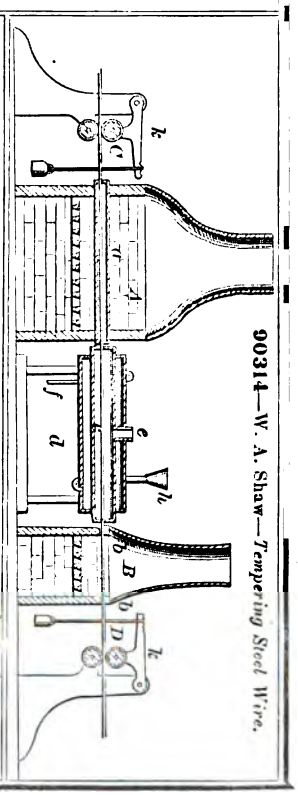

90341—I. Cooper—*Potato Digger.*

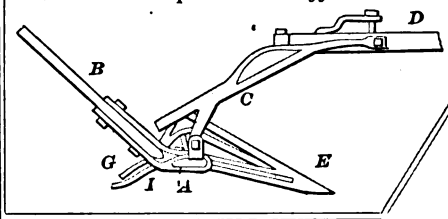

90342—E. J. Cridge—*Stove.*

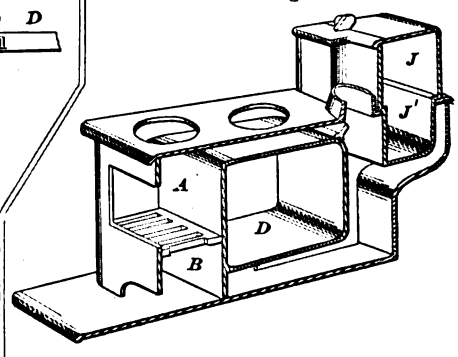

90344—G. Dare—*Bag Holder.*

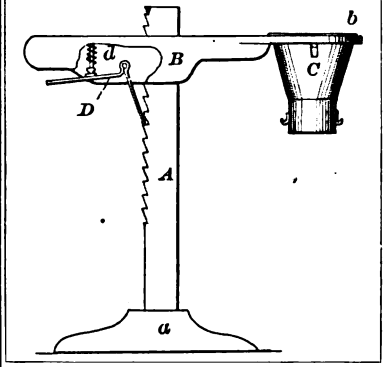

90343—G. T. Dalton—*Faucet.*

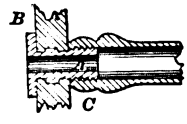

90345—M. L. Deering—*Sliding Door Sheave.*

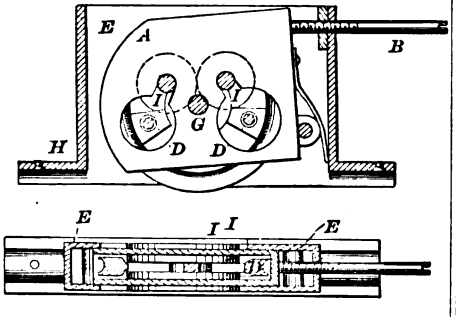

90346—C. H. De Lamater—*Furnace for Steam.*

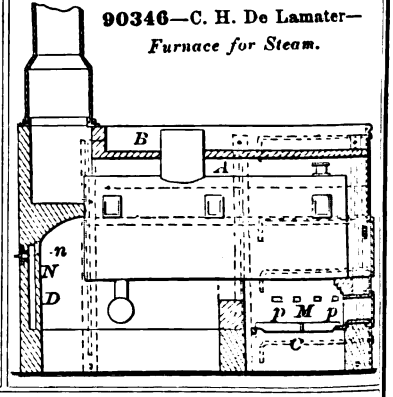

90350—Dobson & McDonnell—*Banjo.*

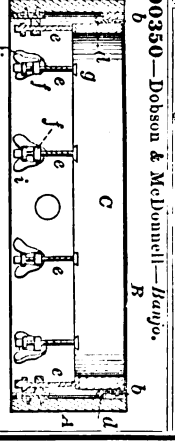

90348—T. Deschamps—*Glove Fastening.*

Fig. 1

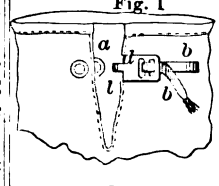

Fig. 8

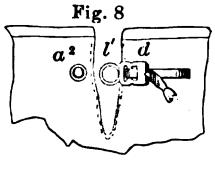

Fig. 12

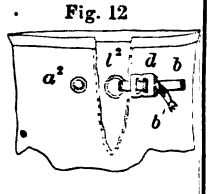

Fig. 2

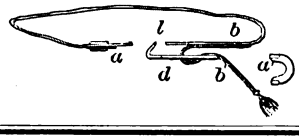

Fig. 9

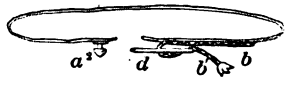

90325—G. J. Wardwell—*For Stone Channeling.*

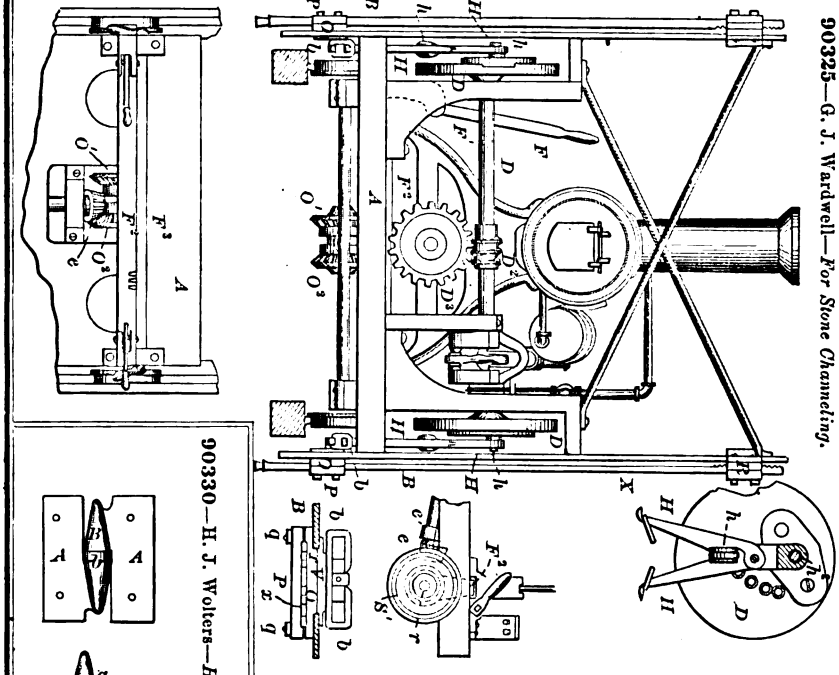

90330—H. J. Wolters—*Hinge.*

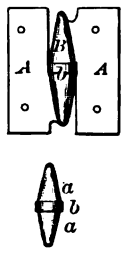

90335—J. Beck—*Coloring and Tinting Rubber Goods.*

90331—A. C. Corse—*Stove.*

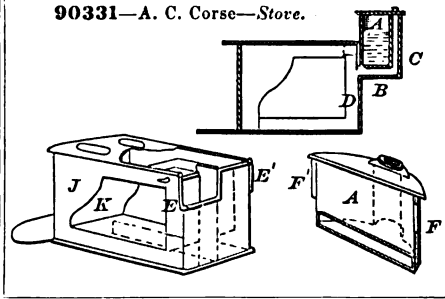

90338—G. E. Brettell—*Chuck.*

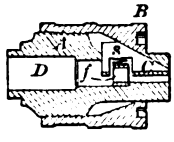

90336—J. H. Bellamy—*Railway Hose Protector.*

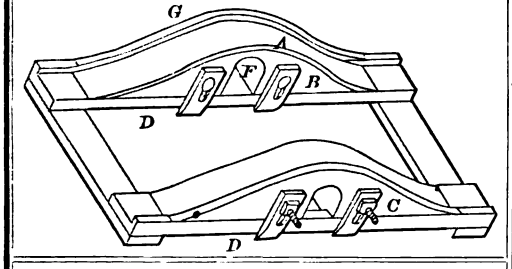

90339—T. J. Burke—*Brick Press.*

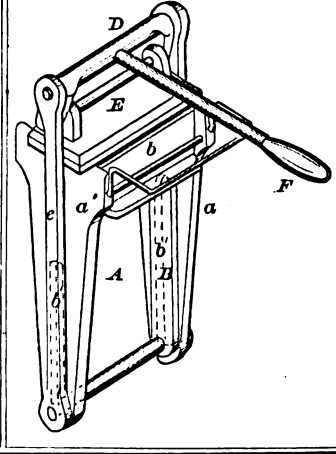

90340—G. F. Clemons—*Tuck Creaser and Guide.*

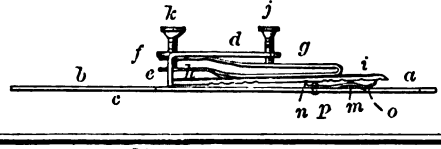

90358—W. Hailes—*Stove.*

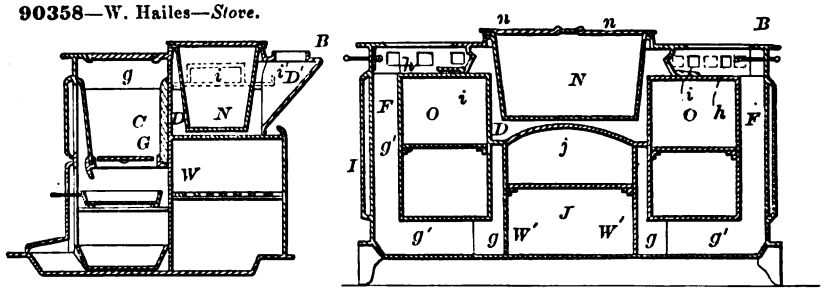

90361—R. M. Hoe—*Fireproof Building.*

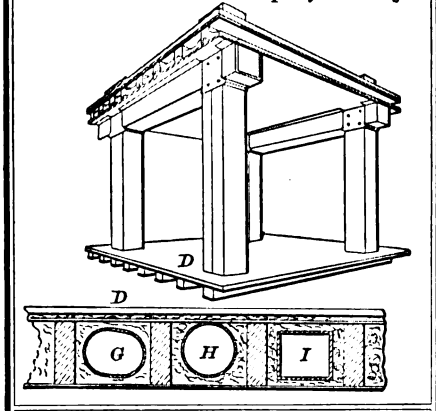

90362—J. Hollingsworth—*Horse Rake.*

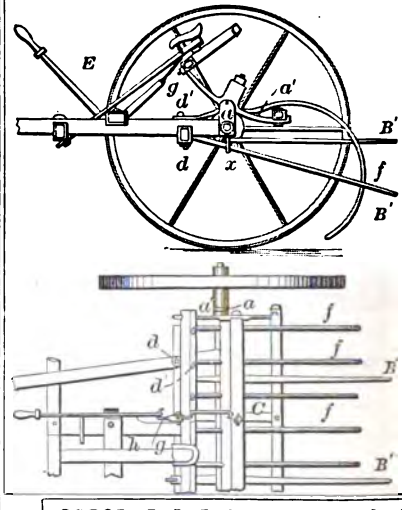

90364—E. G. Jelley—*Heddle for Looms.*

90365—J. M. Johnston—*Saw.*

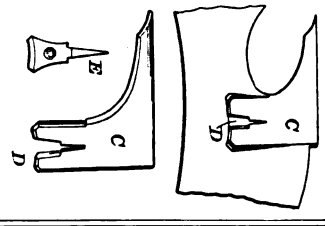

90368—F. A. Lane—*Mattress.*

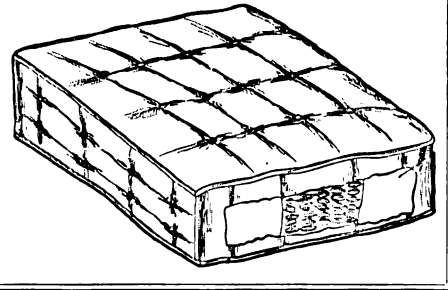

90363—L. L. Jackson—*Dress Makers' Measure.*

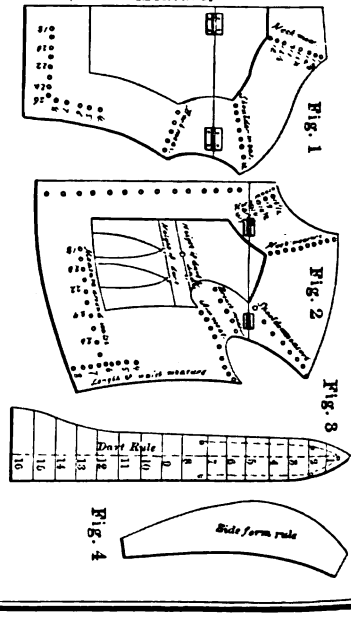

90349—W. Dietrichsen—*For Preserving Beer.*

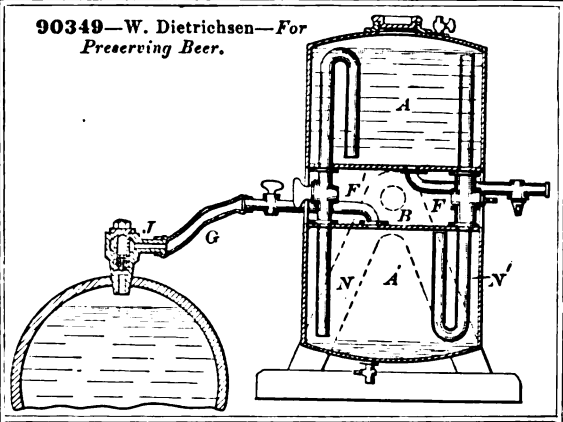

90352—G. L. Du Laney—*For Attaching and Detaching Horses.*

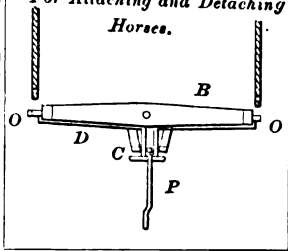

90353—D. H. Fanning—*Corset.*

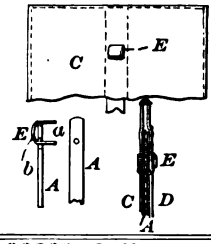

90354—T. O. Foot—*Sewing Machine.*

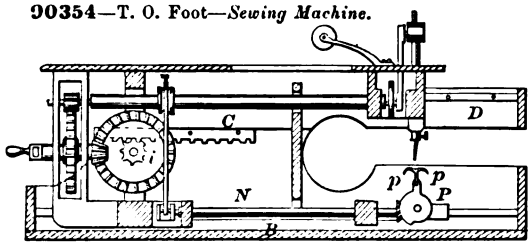

90360—R. Heneage—*Ice Preserver and Water Cooler.*

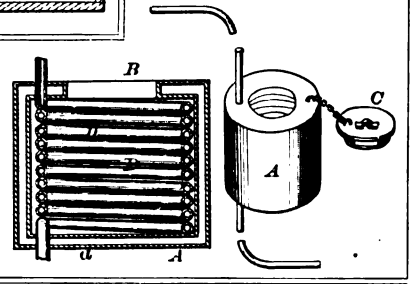

90355—J. Gorton—*Road Scraper.*

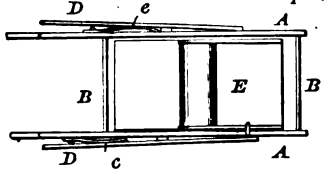

90356—J. W. Graham—*Lamp Post.*

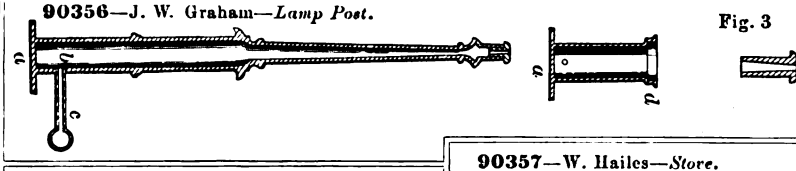

Fig. 3

90351—J. L. Dolson—*Carriage.*

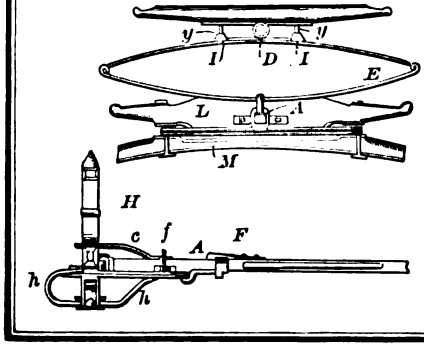

90357—W. Hailes—*Store.*

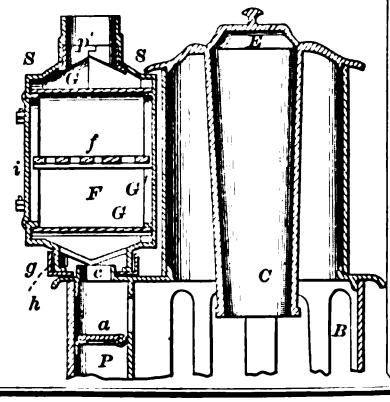

90378—Morgan & McMullan—*Roving Frame.*

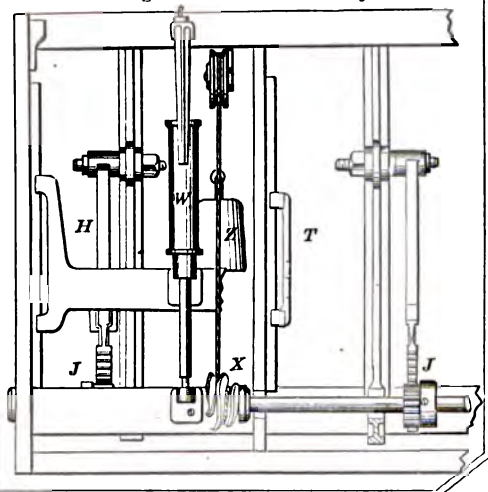

90380—E. Myrick—*Chimney Cap.*

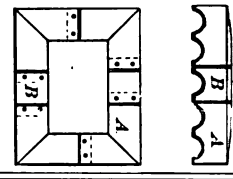

90382—J. S. Palmer—*For Setting Button Hooks.*

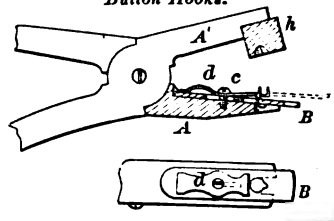

90381—J. D. S. Newell—*Fire Arm.*

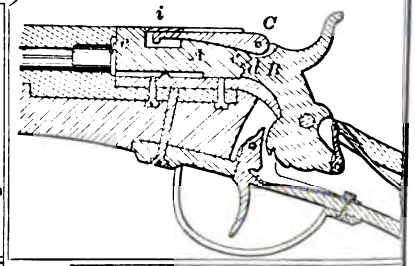

90383—Parkman & Trussell—*Filter.*

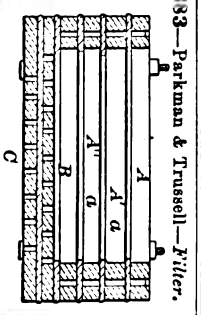

90384—J. F. Peck—*Bed Bottom.*

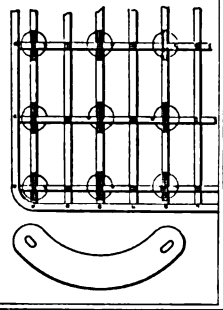

90386—H. W. Persing—*Coffee Roaster.*

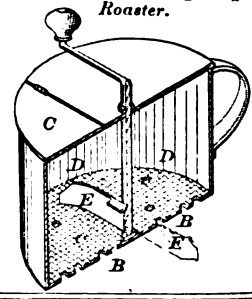

90385—W. Peck—*Wind Wheel.*

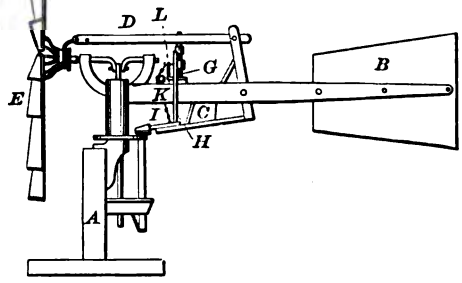

90387—Persing & Pease—*For Making Tea and Coffee.*

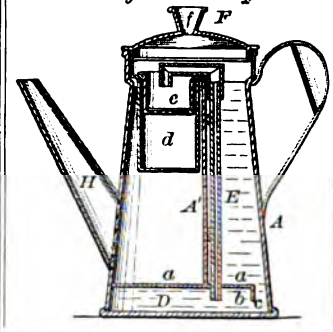

90388—W. R. Pomeroy—*Dental Instrument.*

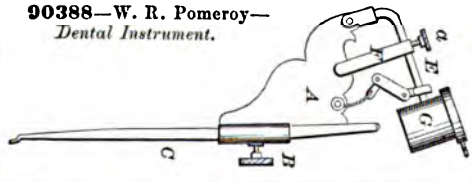

90389—J. L. Porter—*Abdominal Supporter.*

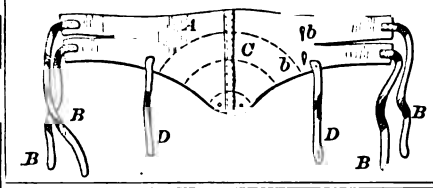

90390—E. S. Poucher—*Carpet Cleaning Machine.*

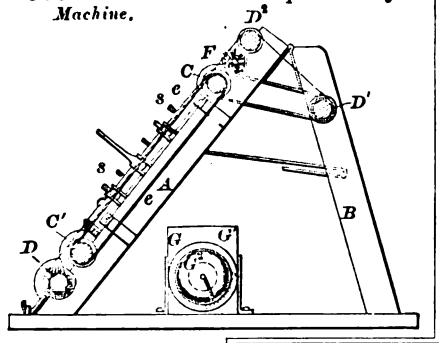

90391—S. G. Rice—*Washing Machine.*

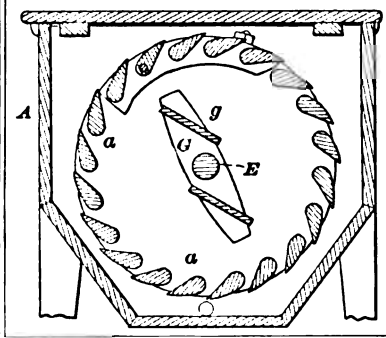

90392—Rice & Adams—*For Treating Hydro-Carbon Oils.*

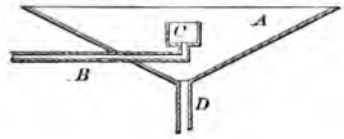

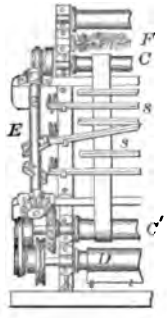

90394—D. Roberge—*Horse Shoe.*

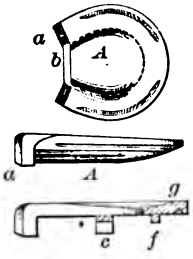

90400—A. D. Smith—*Door Strip.*

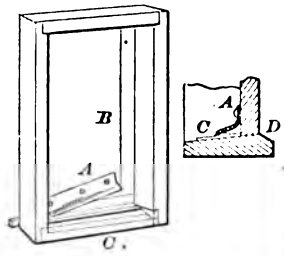

90396—G. A. Russell—*Window.*

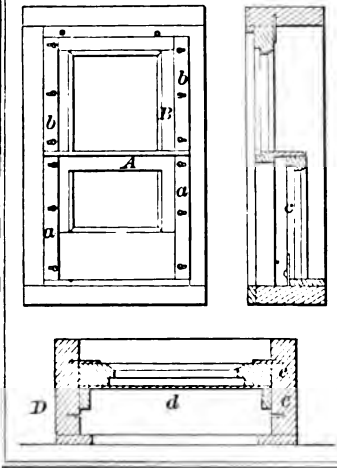

90398—S. Scotton—*Tree Box.*

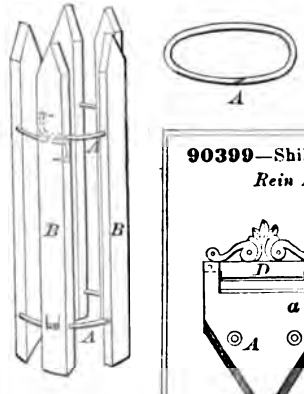

90399—Shillito & Walker—*Rein Holder.*

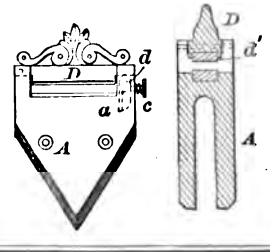

90401—H. Smith—*Flue Stopper.*

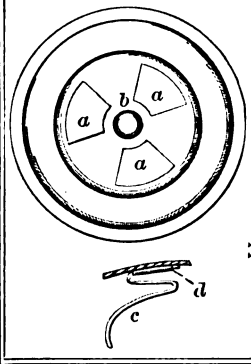

90402—W. Smith—*Fly Trap.*

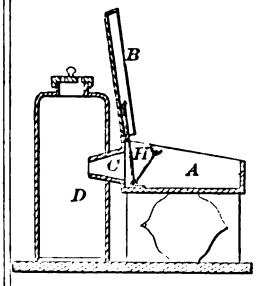

90404—S. Soules—*Potato Digger.*

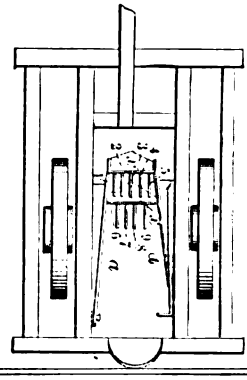

90403—Snow & Elmendorf—*Truss Rocker Beam.*

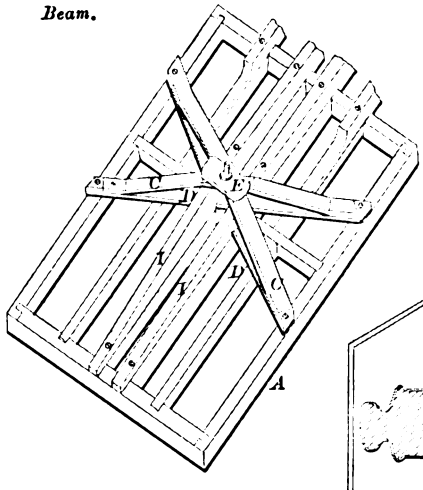

90405—T. Stewart—*Filter.*

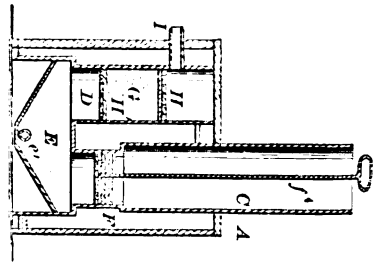

90406—C. E. Sweney—*Neck Yoke.*

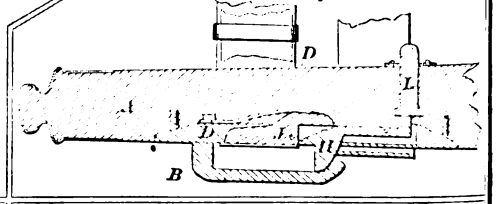

90407—W. Tanner—*For Sharpening Mowing Machine Cutters.*

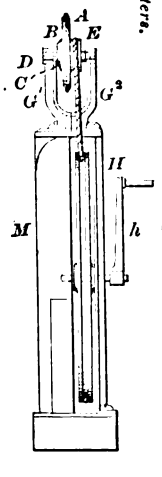

90408—H. H. Thomas—*Torpedo.*

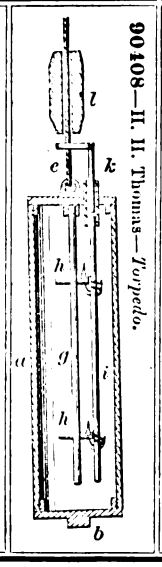

90409—J. Thomson—*Amalgamator.*

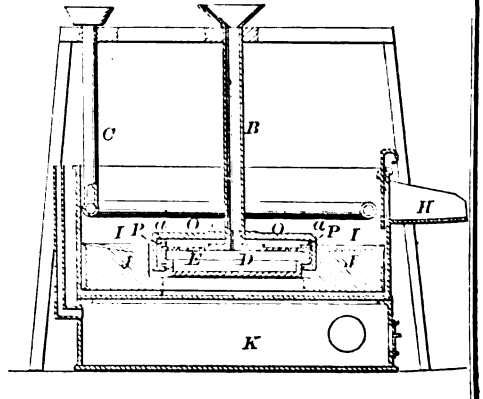

90410—C. D. Tisdale—*Car Wheel and Axle.*

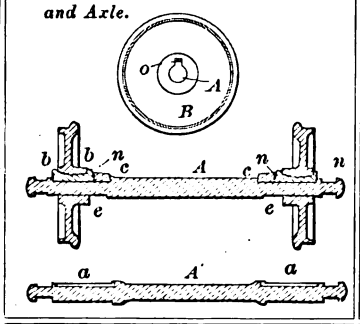

90411—L. W. Turner—*Broom Holder.*

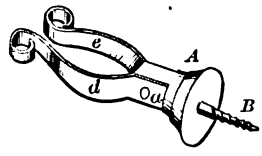

90412—T. H. Tyndale—*Axe.*

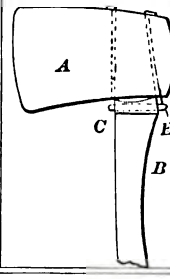

90414—Wilkins, Crodle & Niner—*Churn*

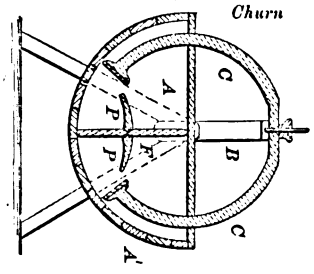

90413—O. A. White—*Churn Dasher.*

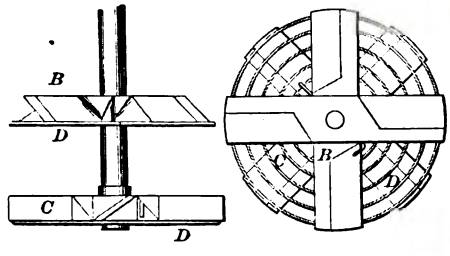

90415—L. J. Wolf—*Ale, Beer and Water Cooler.*

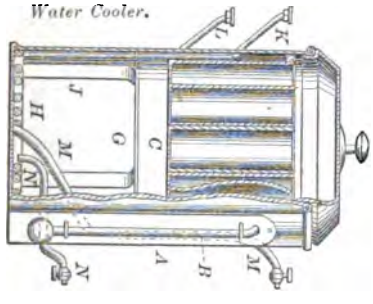

90416—J. B. Woolsey—*Washing Machine.*

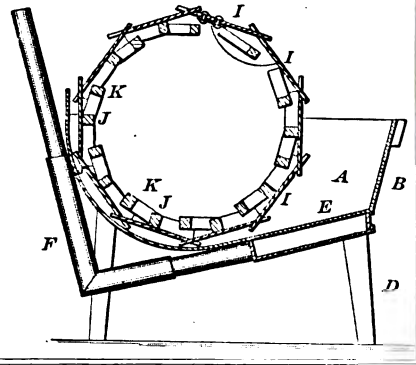

90418—S. E. Allen—*Case for Schedules.*

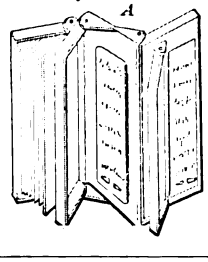

90419—V. M. Baker—*Turbine Wheel.*

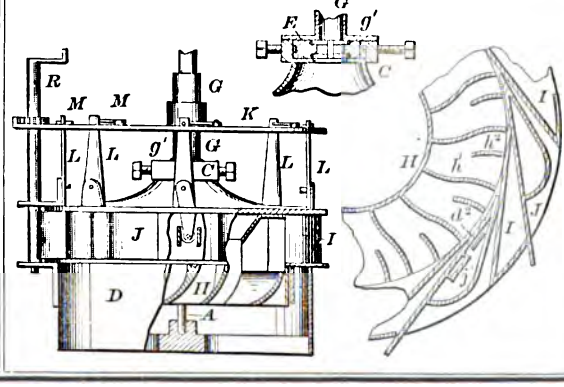

90420—C. L. Bates—*Rose for Door Knobs.*

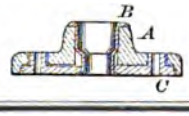

90421—Brown & Allen—*Gate.*

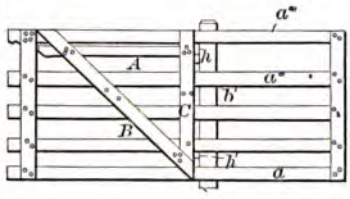

90423—P. Cary—*Hoisting Attachment for Horse Powers.*

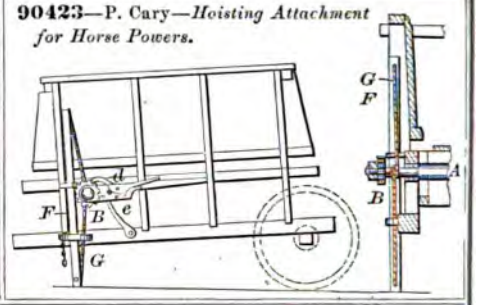

90422—A. Cannon, Jr.—*Dumb Waiter.*

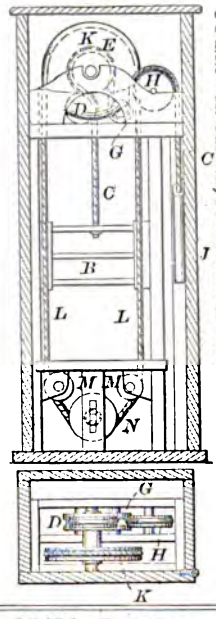

90425—A. Clark—*Hay Raker and Loader.*

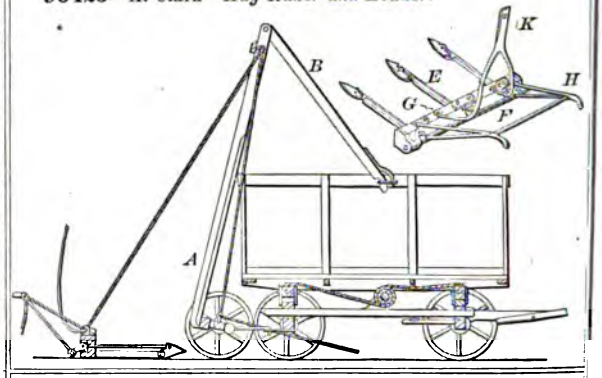

90426—J. L. Clark—*Corpse Preserver.*

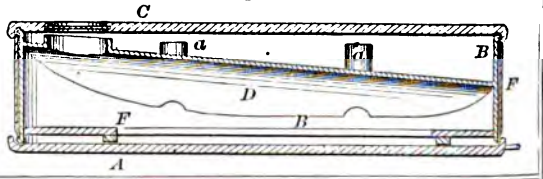

90424—T. A. Case—*Cream Pump.*

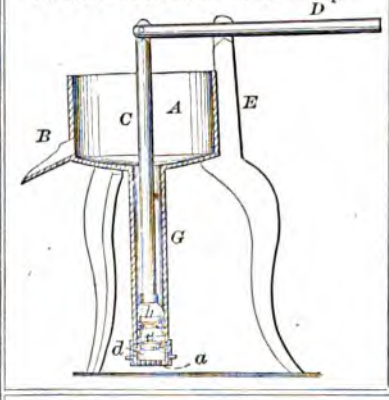

90428—A. Crook—*Lamp.*

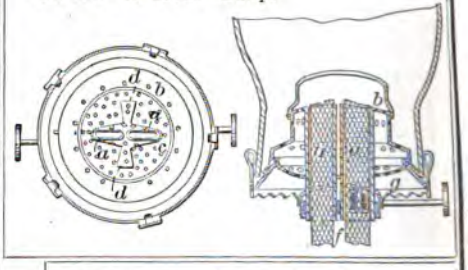

90427—C. A. Condé—*Stop Valve.*

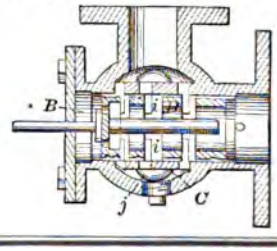

90430—F. W. Dean—*Harness Buckle.*

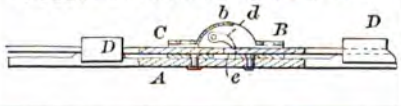

90410—C. D. Tisdale—*Car Wheel and Axle.*

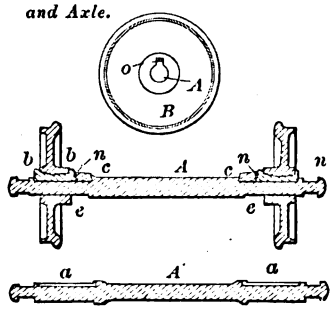

90411—L. W. Turner—*Broom Holder.*

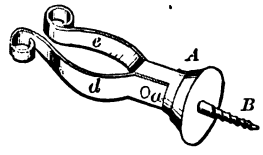

90412—T. H. Tyndale—*Axe.*

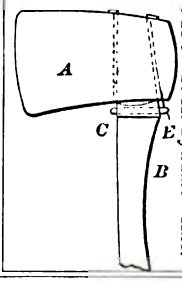

90414—Wilkins, Crodle & Niner—*Churn*

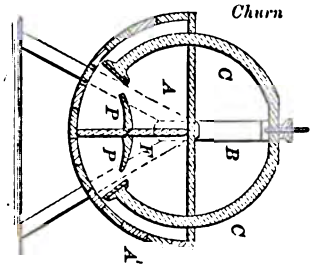

90413—O. A. White—*Churn Dasher.*

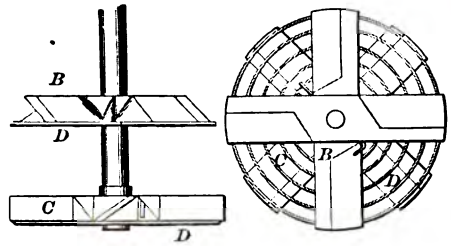

90415—L. J. Wolf—*Ale, Beer and Water Cooler.*

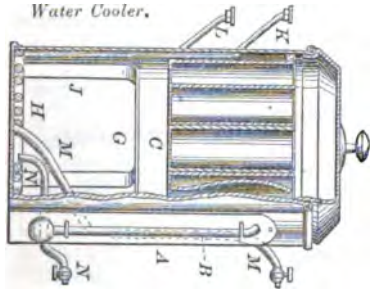

90416—J. B. Woolsey—*Washing Machine.*

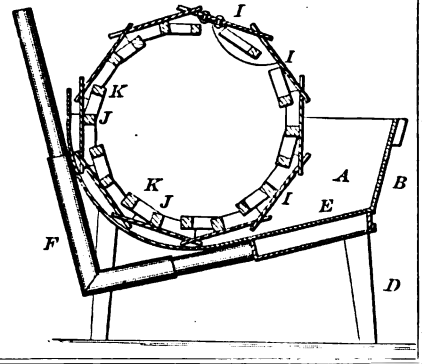

90418—S. E. Allen—*Case for Schedules.*

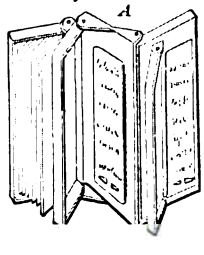

90419—V. M. Baker—*Turbine Wheel.*

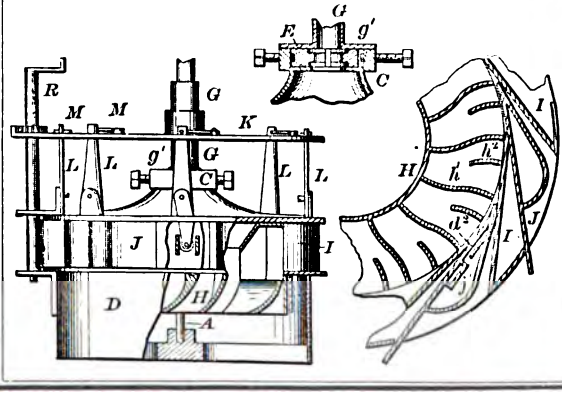

90420—C. L. Bates—*Rose for Door Knobs.*

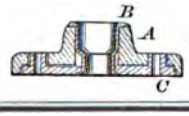

90437—Ellithorp & Sloane—*Coal Scuttle.*

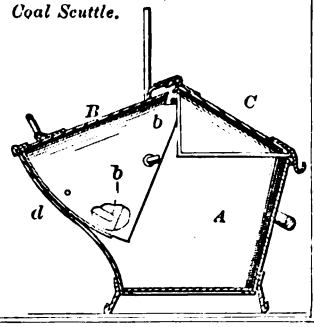

90441—F. A. Geisler—*Christmas Tree.*

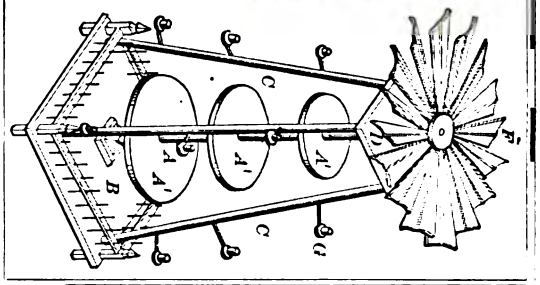

90439—L. P. Garner—*Coal Breaker and Separator.*

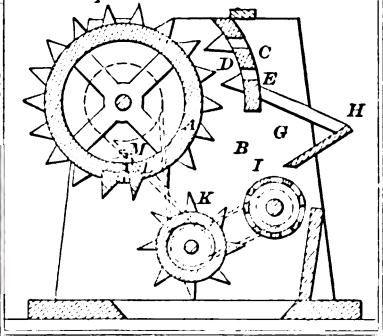

90440—D. H. Geiger—*For Collecting and Forcing Gases from Blast, Puddling and other Furnaces.*

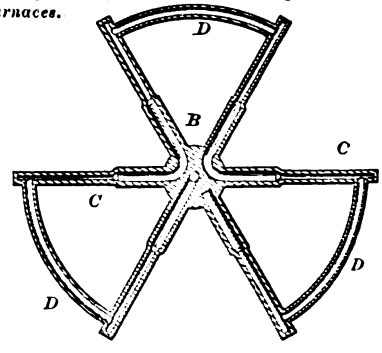

90442—K. Goddard—*Calk for Horse Shoes.*

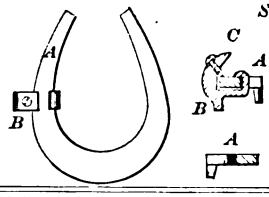

90445—J. W. Grant—*Gas Machine.*

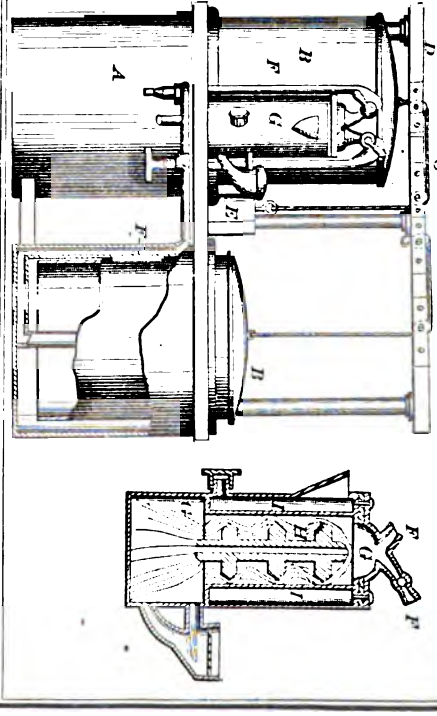

90444—W. A. Gray—*For Producing Fresh Potable Water.*

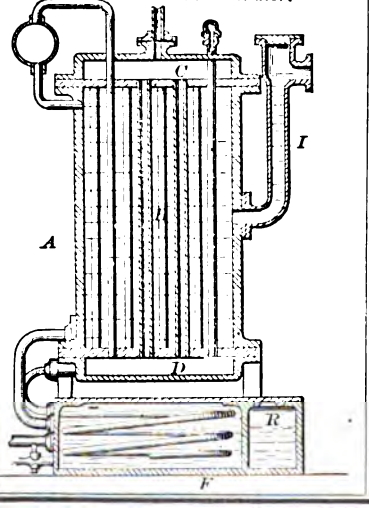

90446—S. J. Halstead—*Horse Rake.*

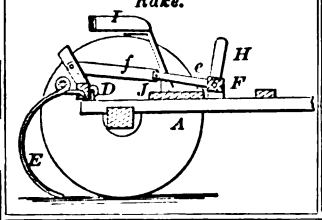

90447—T. Hardcastle—*Roll for Mangles, Washing Machines, &c.*

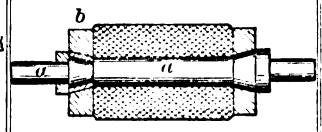

90448—N. Harper—*Blank for Rakes and Hoes.*

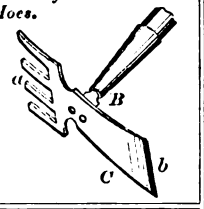

90449—E. Hoag—*Bed Bottom.*

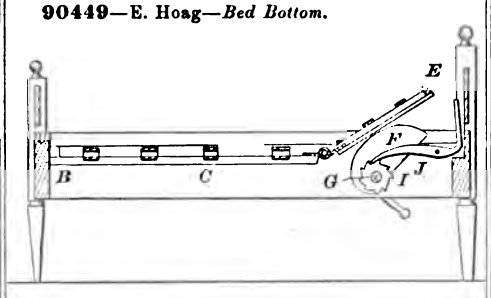

90450—Howard & Bousfield—*Steam Generator.*

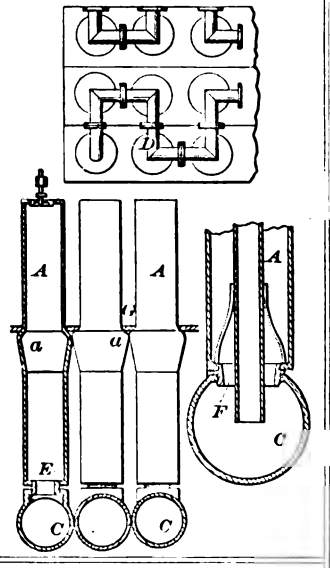

90451—J. E. Hunter—*Corn Shock Binder*

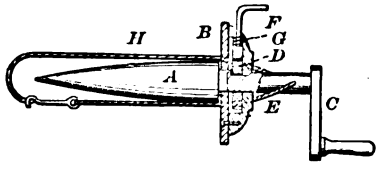

90454—J. J. Lovell—*Eaves Protector.*

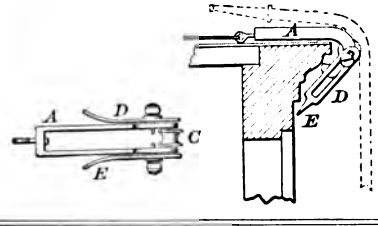

90452—E. B. Johnson—*Furniture Drawer.*

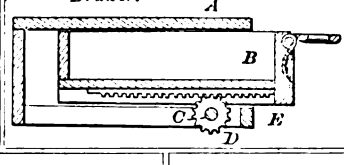

90453—J. Keane—*Water Closet Apparatus.*

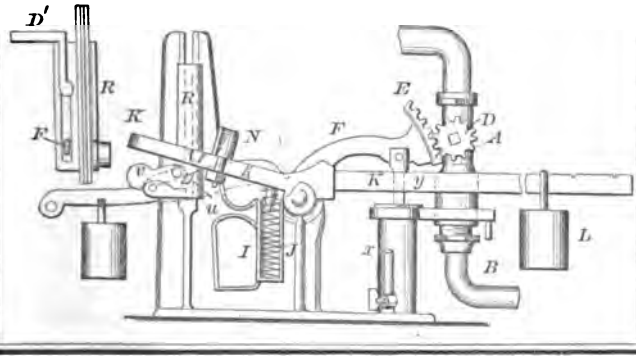

90455—T. E. Lutner—*Crank Axle for Wagons.*

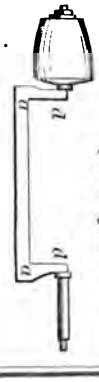

90456—N. P. Maker—*Drop Press.*

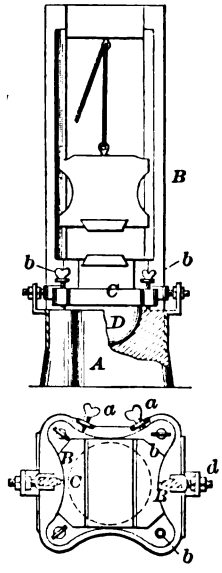

90457—G. B. Massey—*Measuring Funnel.*

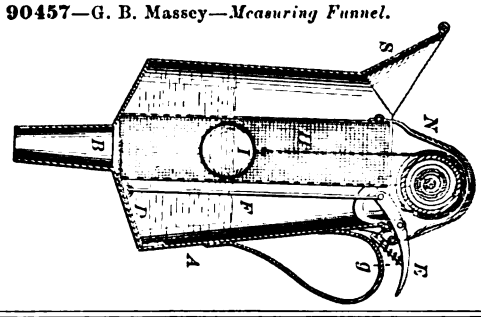

90458—F. Mills—*For Setting Wagon Tires.*

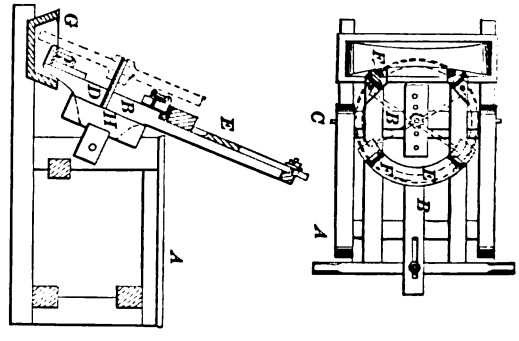

90461—Mumford & Wallis—*For Dressing Millstones.*

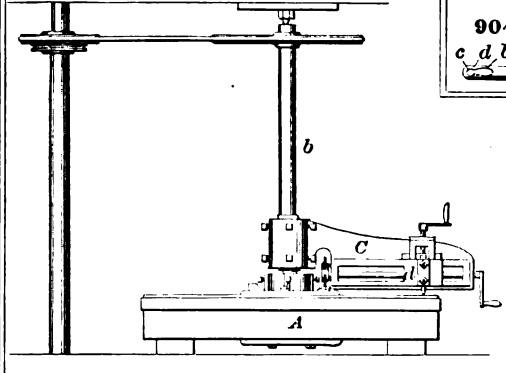

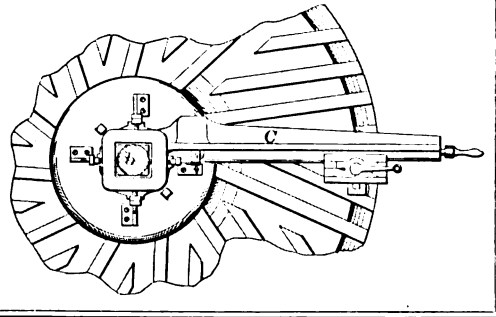

90460—A. Morrall—*Sewing Needle.*

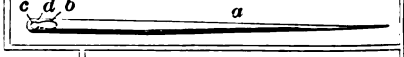

90459—Miner & Torrey—*Stove Pipe Shelf and Oven.*

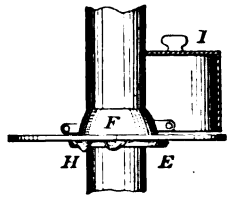

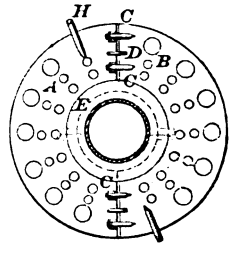

90462—I. A. Newhall—*Washing Machine.*

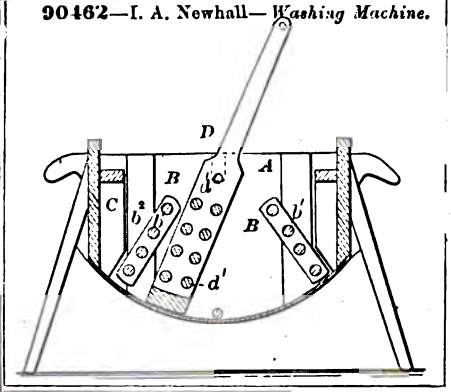

90463—L. D. Pitcher—*Hay and Manure Fork.*

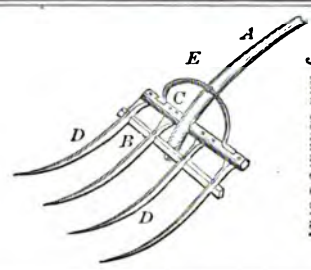

90467—J. M. Shuck—*Washing Machine.*

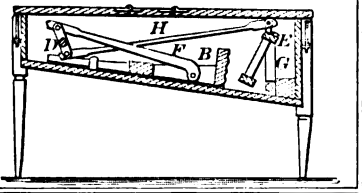

90464—F. Raith—*Store.*

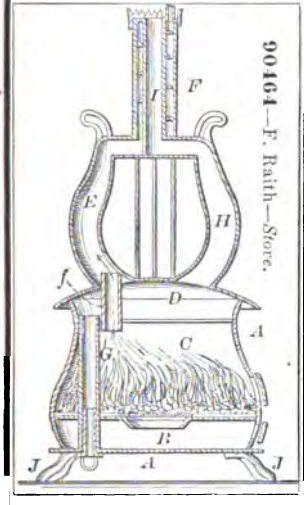

90465—W. C. Rice—*Paddle Wheel.*

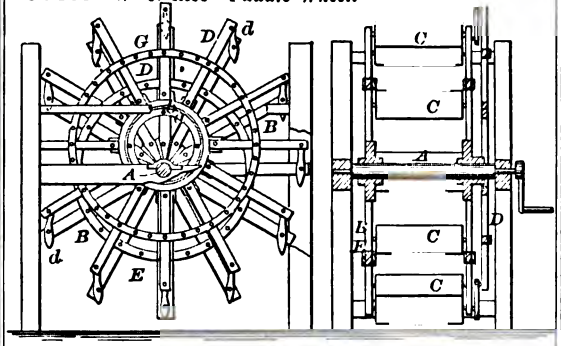

90466—A. Sheline—*Wagon Seat.*

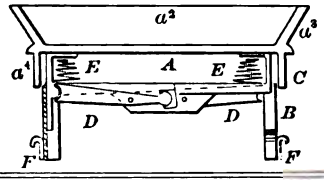

90468—J. C. Smith—*Water Wheel.*

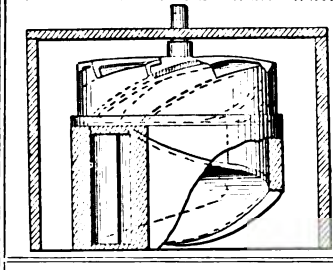

90470—L. H. Soule—*Velocipede.*

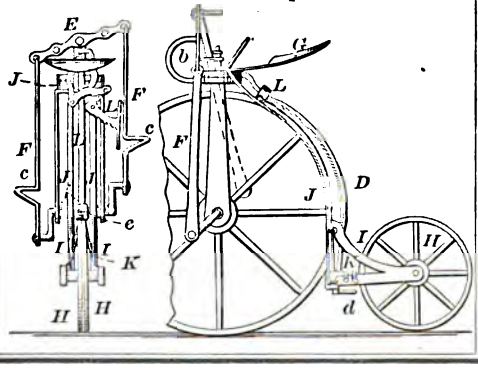

90469—W. H. Snyder—*Water Wheel.*

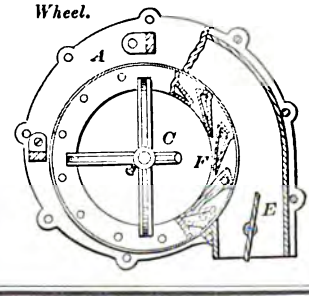

90471—J. Stark—*Dough Raiser.*

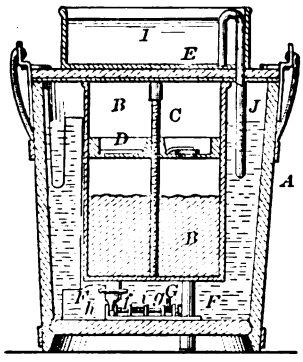

90472—R. R. Sylands—*Pulp Washer.*

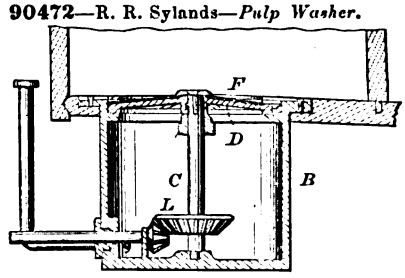

90473—J. N. Thatcher—*Carriage Jack.*

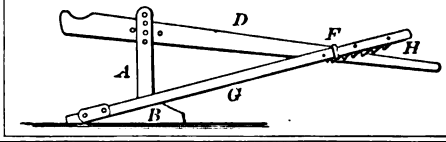

90475—E. Wiard—*Plow.*

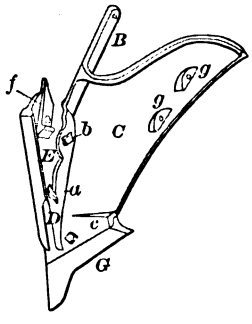

90479—C. W. Baldwin—*Fluid Meter.*

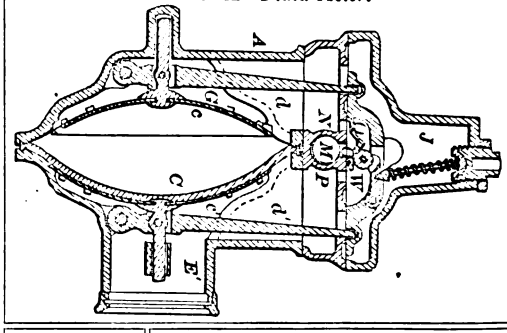

90481—D. Banks—*Friction Clutch.*

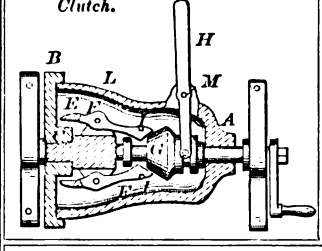

90474—W. Veber, Jr.—*Knife.*

90477—J. B. Aikin—*Boot Crimper.*

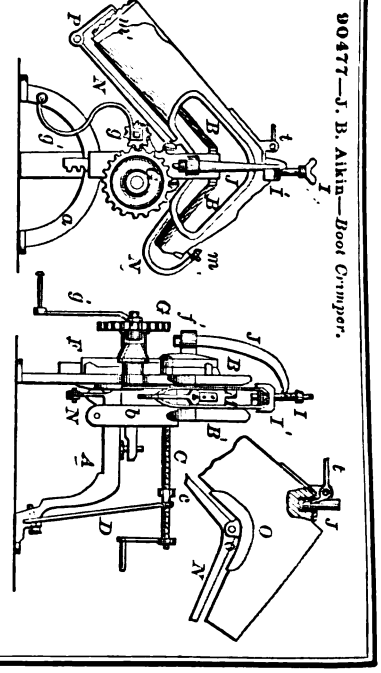

90478—Alexander & Burchell—*Iron Front for Buildings.*

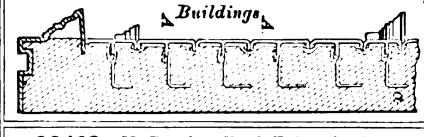

90482—H. Barth—*Feed Table for Printing Presses.*

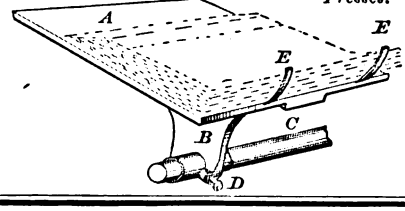

90480—E. P. Ball—*Steam Engine.*

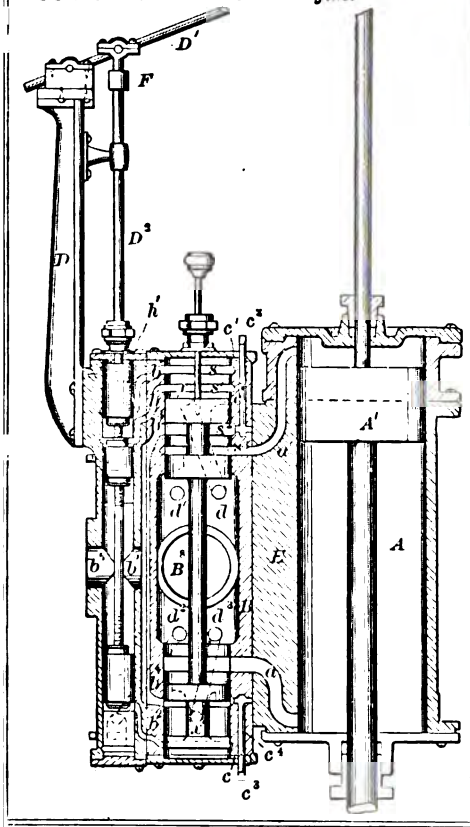

90483—F. H. Bartholomew—*Valve.*

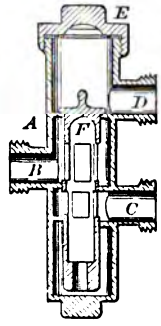

90484—J. F. Bartlett—*Lamp Chimney.*

90486—N. W. Beckwith—*Hot Closet for Stove Pipes.*

90487—W. Bellows—*Lathe Chuck.*

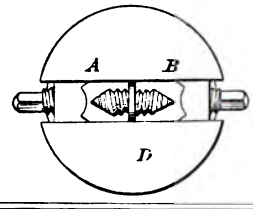

90485—S. Y. Beach—*Belt Awl.*

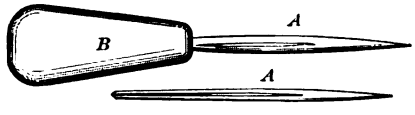

90488—A. C. Black—*Plow Clearer.*

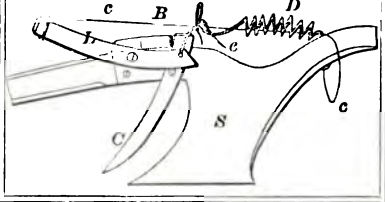

90490—B. Breeden—*Washing Machine.*

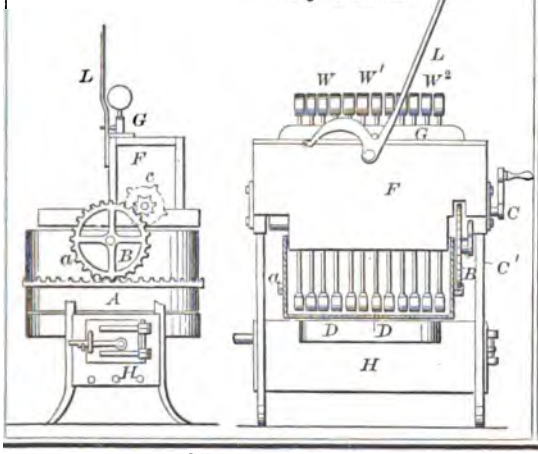

90489—P. J. Boris—*Velocipede.*

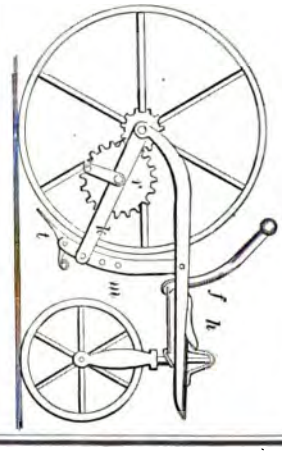

90491—W. Broomhall—*Coffin.*

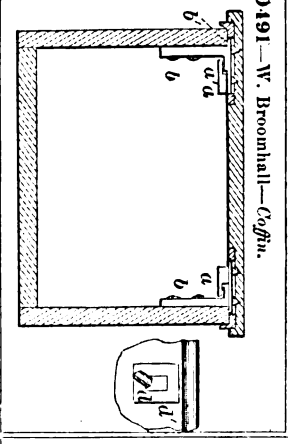

90493—H. L. & C. P. Brown—*For Distributing Guano.*

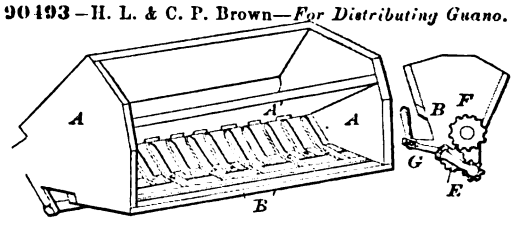

90503—G. N. Compton—*Whiffletree.*

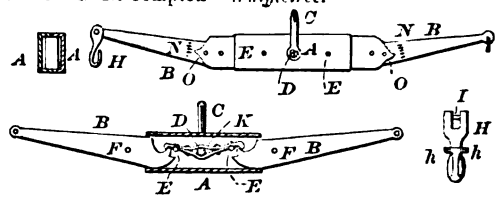

90492—G. W. Brown—*For Bending Metals Edgewise.*

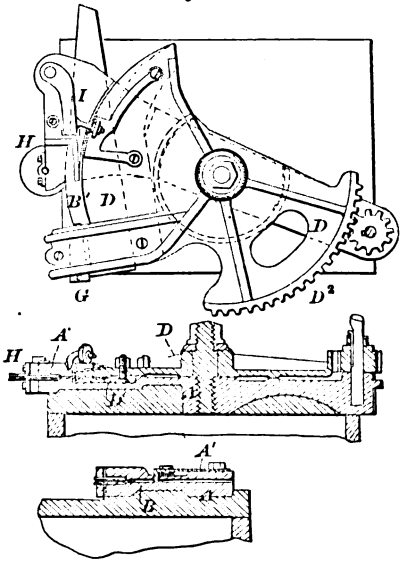

90495—M. E. Burtless—*Ditching Machine.*

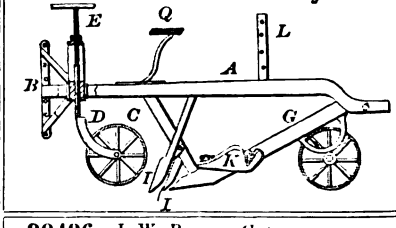

90496—J. W. Byers—*Gate.*

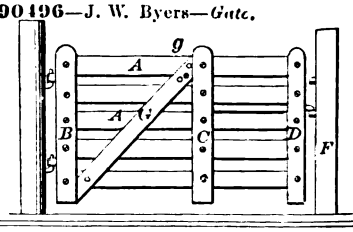

90498—L. Chapman—*Handle for Umbrellas and Canes.*

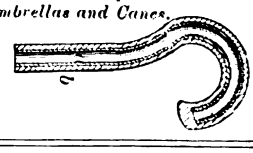

90499—E. Chesterman—*Insole.*

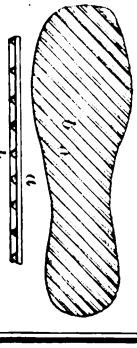

90501—F. Clausen—*Buckle.*

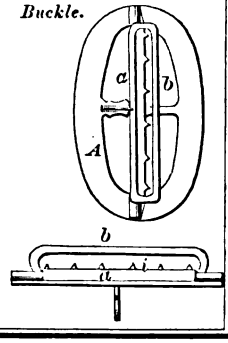

90500—C. B. Clark—*Hinge.*

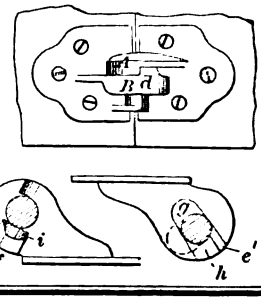

90502—B. R. Cole—*Water Closet.*

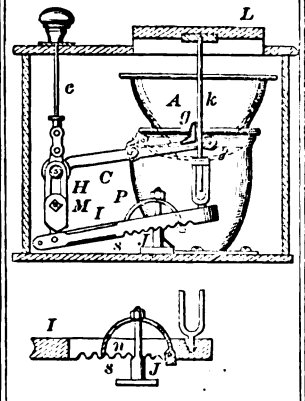

90504—J. J. Cowell—*Hinge and Spring.*

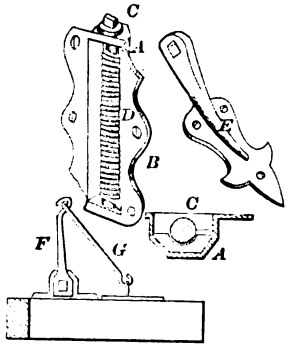

90506—B. Crawford—*Steam Generator.*

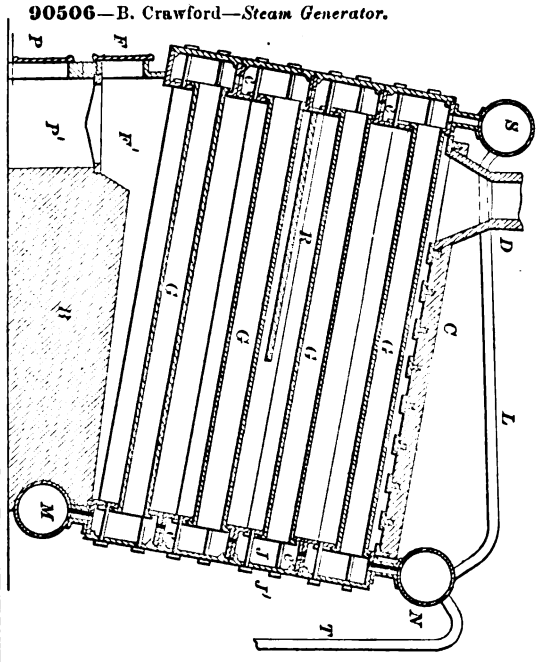

90507—C. O. Crosby—*Sewing Machine.*

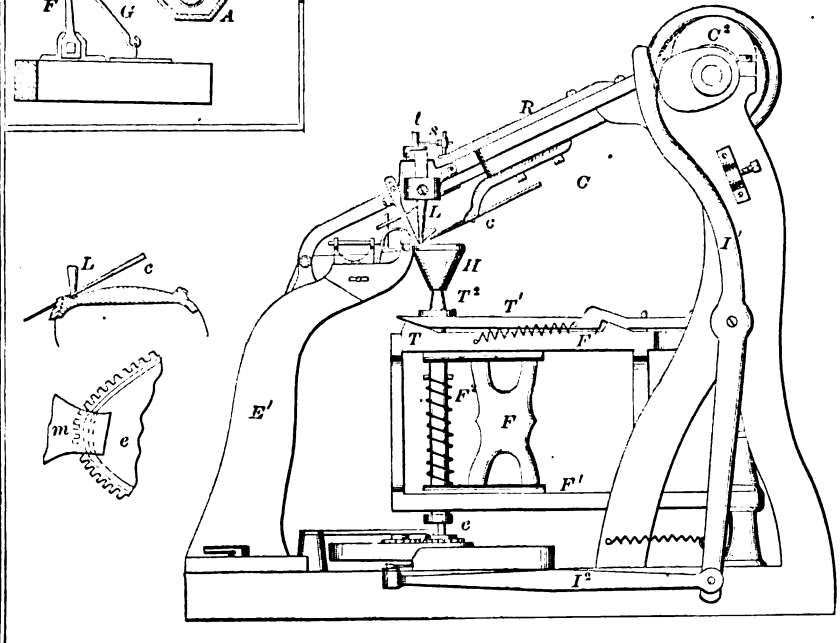

90508—C. O. Crosby—*For Making Tatting.*

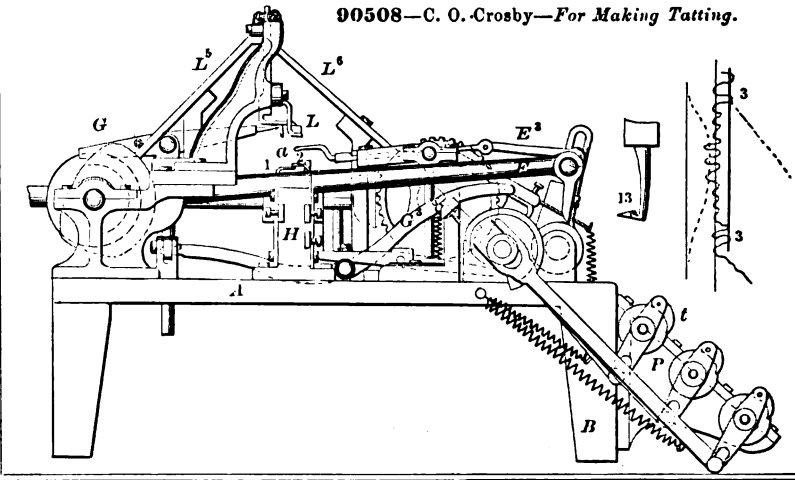

90509—J. Davidson—*Dough Mixing Machine.*

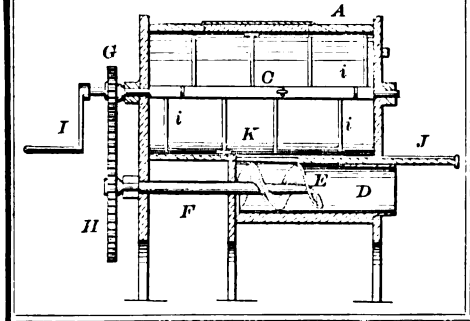

90510—M. B. Dodge—*Ore Crusher.*

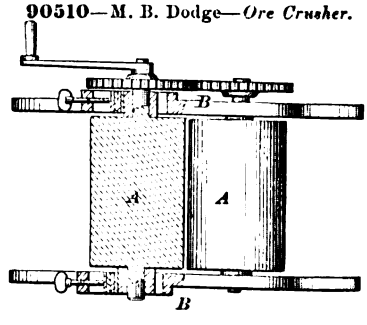

90511—D. Donalds—*Sad Iron.*

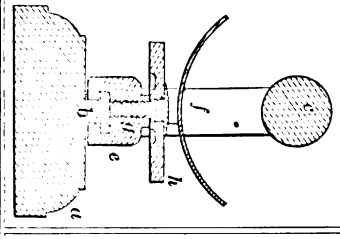

90513—Z. Eastman—*Running Gear of Street Cars.*

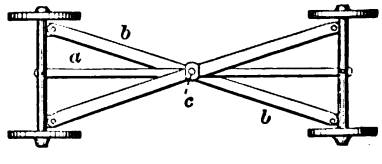

90515—A. Elliot—*Reverberatory and Melting Furnace.*

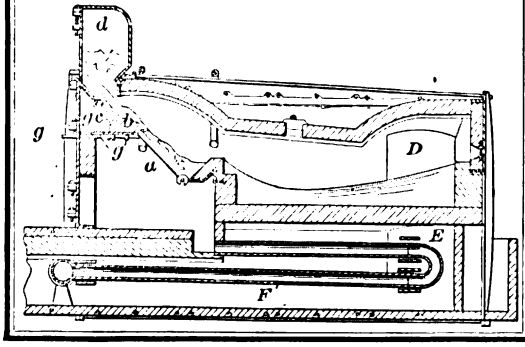

90512—Dwight & Wells—*Plow.*

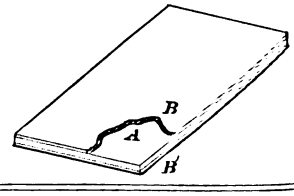

90516—M. H. Fairchild—*Horn Comb.*

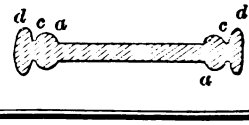

90517—Felthoff & Tingley—*Ditching Machine.*

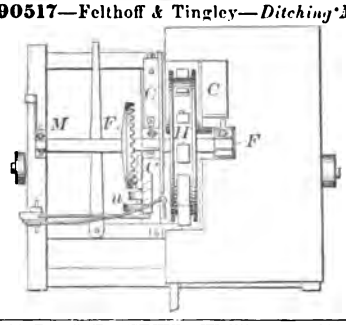

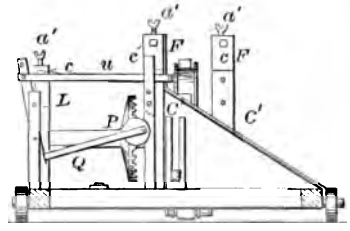

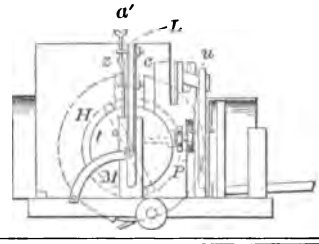

90520—S. Gantz—*Mop Head.*

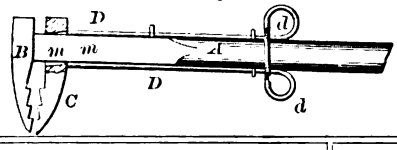

90518—C. E. Fisk—*Printers' Shears.*

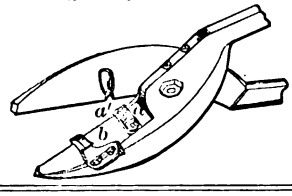

90519—H. G. Fiske—*For Lighting Gas.*

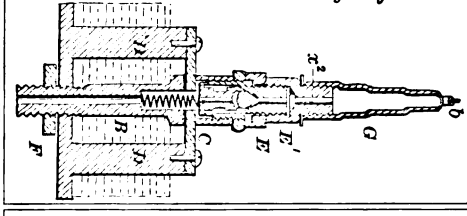

90523—J. H. Goodfellow—*Funnel.*

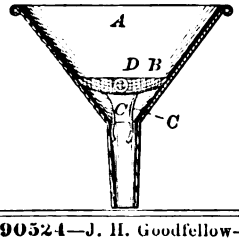

90521—B. G. George—*For Bronzing Printed Work.*

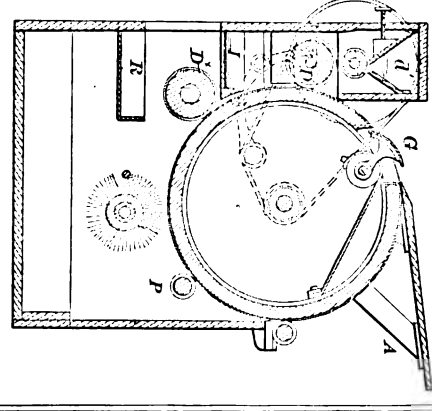

90524—J. H. Goodfellow—*Stove.*

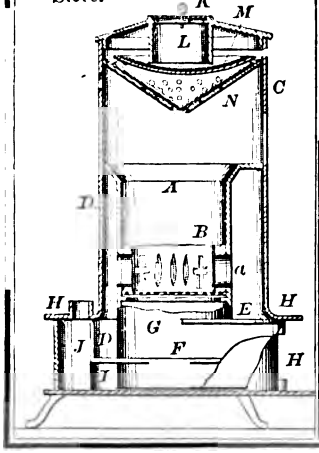

90522—W. L. Gilroy—*For Cutting Green Corn from the Cob.*

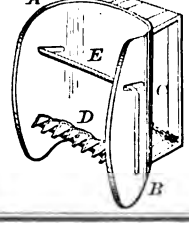

90525—G. W. Gregory—*Pulley Block.*

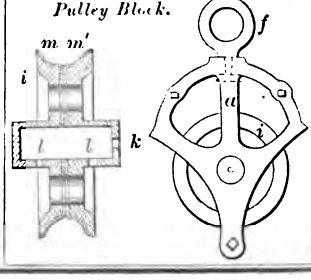

90526—H. Gross—*Manure Hook.*

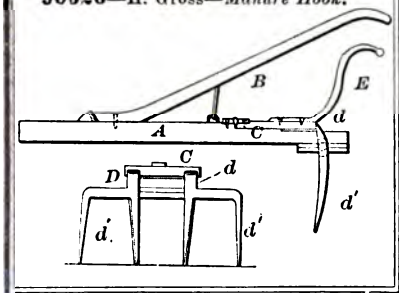

90527—H. Gross—*Manure Hook.*

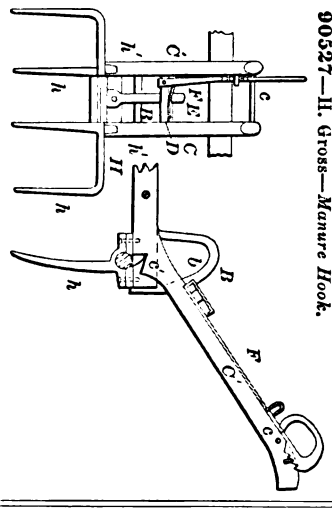

90528—J. Gutmann—*Sewing Machine.*

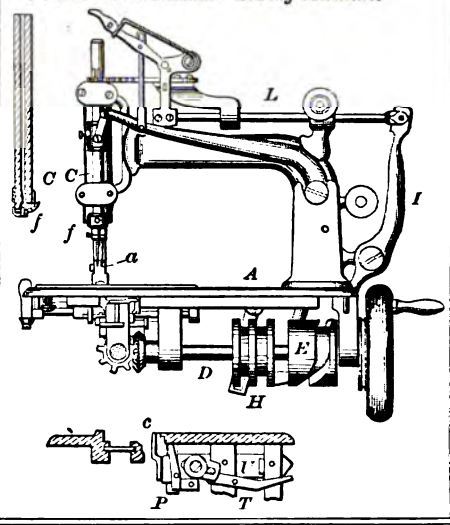

90529—L. A. Haines—*Time Lock.*

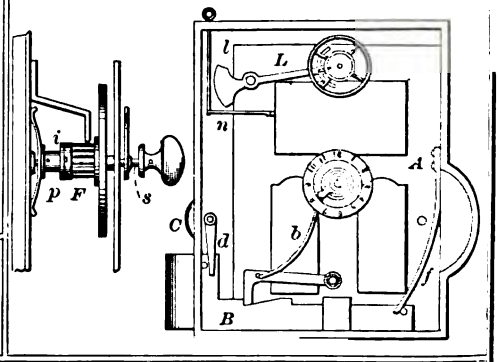

90531—Halladay & Ruggles—*Iron Grinding Plate.*

90532—Hamilton, Hanson & G. W. & J. Hamilton—*Ore Crusher.*

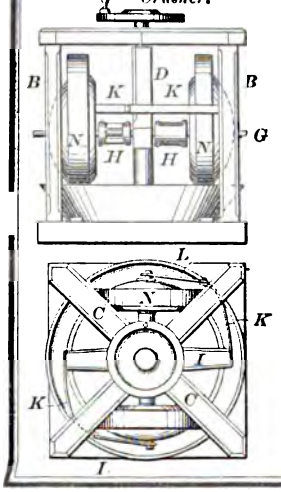

90530—W. Hall, Jr.—*Skating Rod and Stool.*

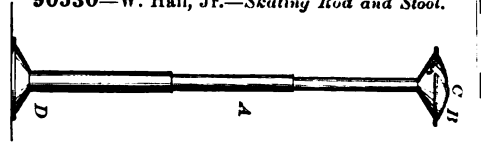

90533—W. Harles—*For Threading Rods, Bolts, &c.*

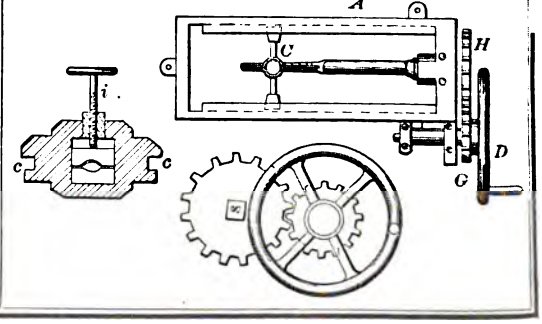

90534—J. J. Harris—*Sawing Machine.*

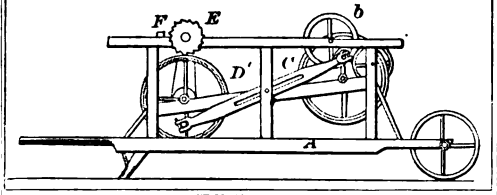

90535—T. C. Hargrave—*Water Meter.*

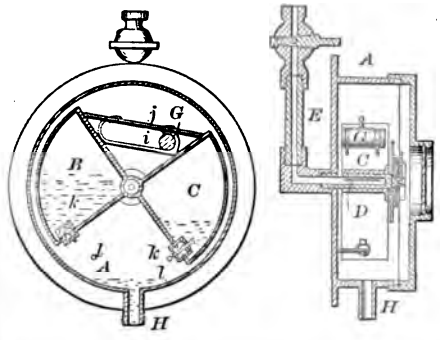

90536—Hathaway & Stetson—*For Finishing Galvanized Tacks.*

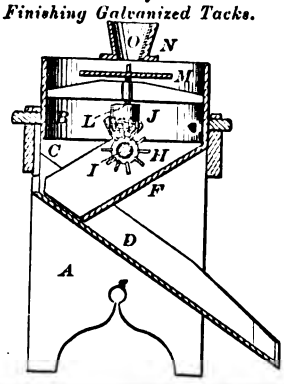

90537—J. H. Helm—*Stove.*

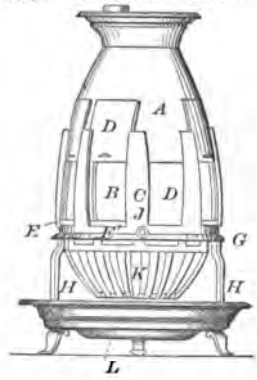

90539—J. Heuermann—*Drinking Vessel Cover.*

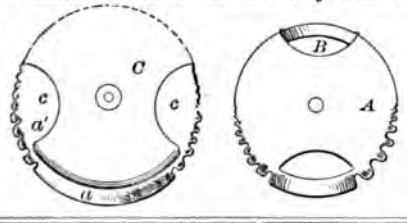

90538—C. Herrmann—*Saw Set.*

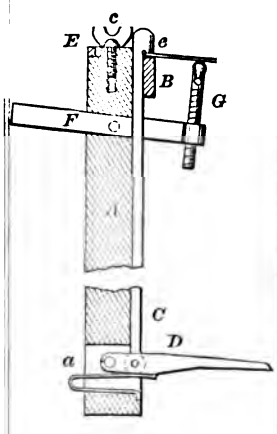

90541—R. A. Hill—*Stop Cock.*

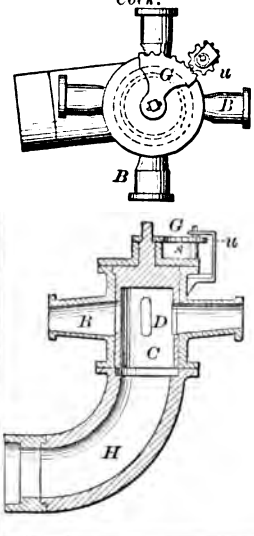

90540—R. A. Hill—*Fire Plug.*

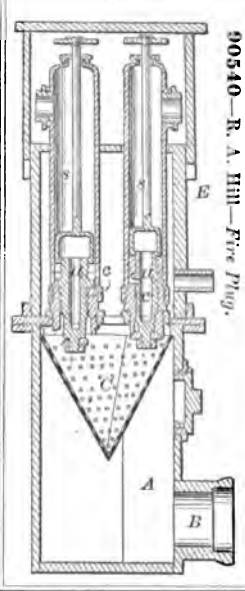

90542—J. Houpt—*Condenser.*

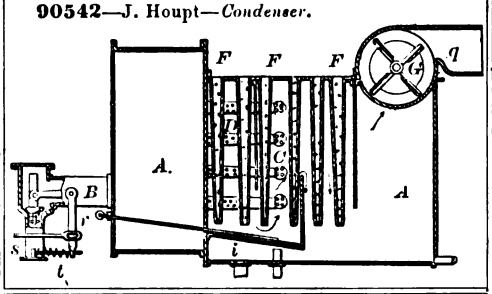

90543—J. L. Howard—*Bracket Basket for Railroad Cars.*

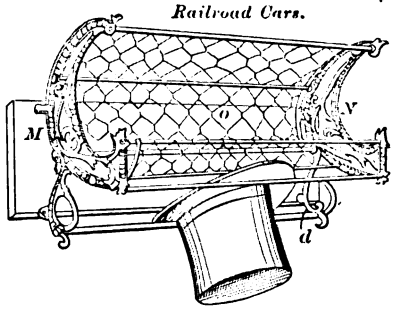

90545—W. W. Hughes—*Drying Malt.*

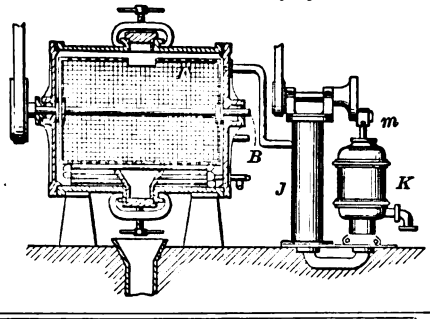

90548—S. Hutchinson—*Propagating Trees and Shrubs.*

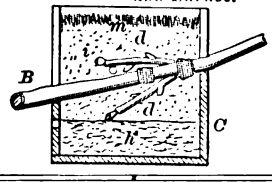

90551—W. F. Jobbins—*Boots and Shoes.*

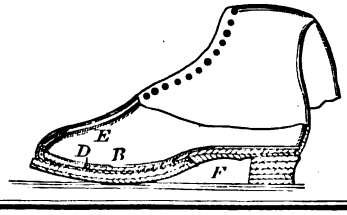

90544—J. S. Huffman—*Churn.*

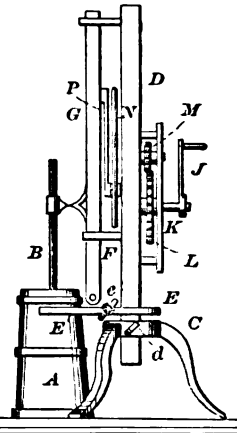

90546—E. Huntington—*Velocipede.*

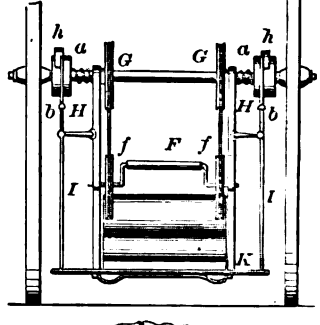

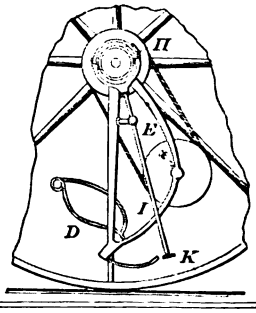

90547—G. Hutchins—*Ratchet Drill.*

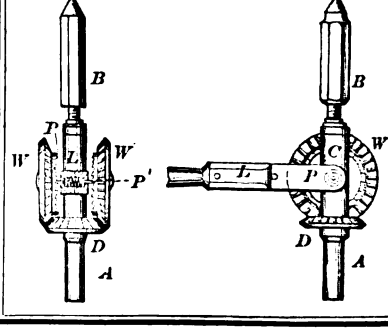

90534—J. J. Harris—*Sawing Machine.*

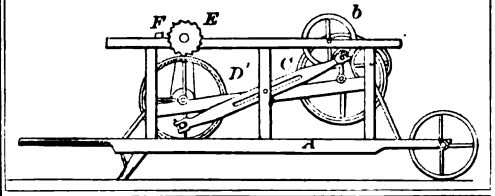

90535—T. C. Hargrave—*Water Meter.*

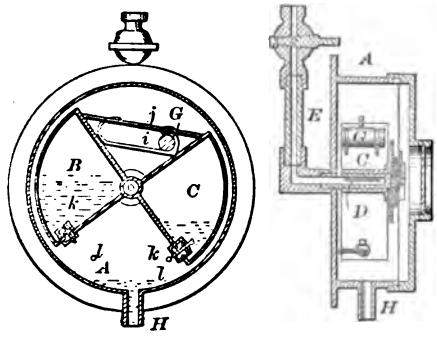

90536—Hathaway & Stetson—*For Finishing Galvanized Tacks.*

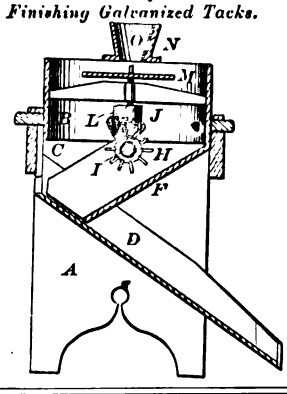

90537—J. H. Helm—*Stove.*

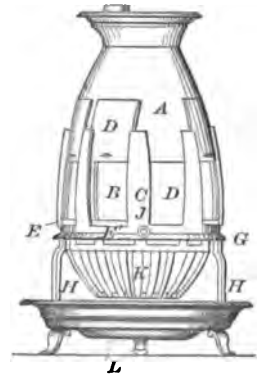

90539—J. Heuermann—*Drinking Vessel Cover.*

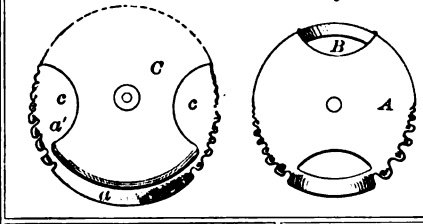

90538—C. Herrmann—*Saw Set.*

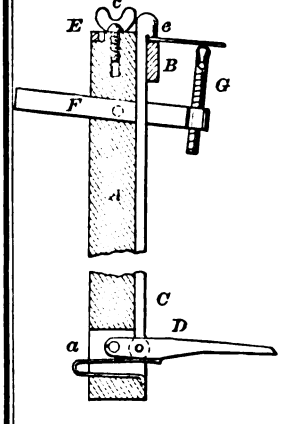

90541—R. A. Hill—*Stop Cock.*

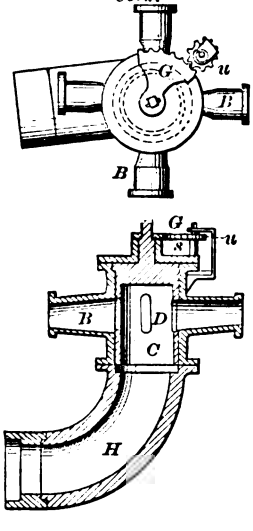

90540—R. A. Hill—*Fire Plug.*

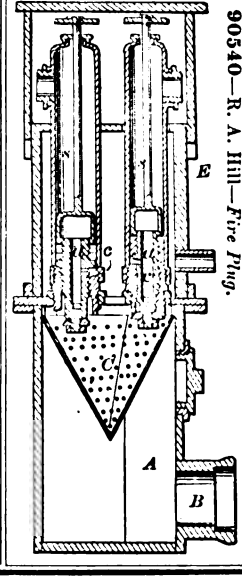

90555—J. Keller—*Brick Machine.*

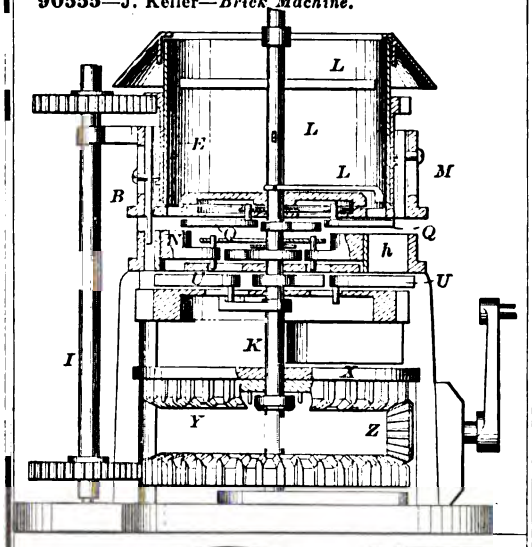

90558—G. King—*Sash Lock.*

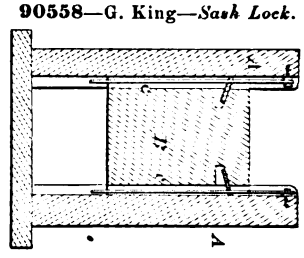

90559—R. Knott—*Stake Puller.*

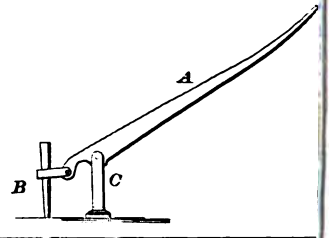

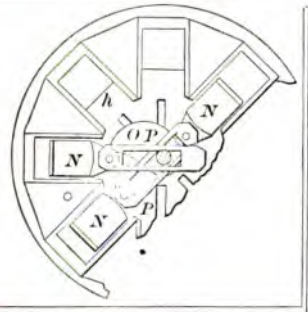

90556—J. F. Keller—*Seed Drill and Fertilizer.*

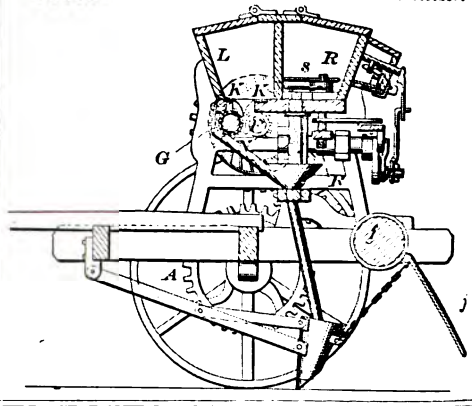

90560—S. E. Knott—*Car Door.*

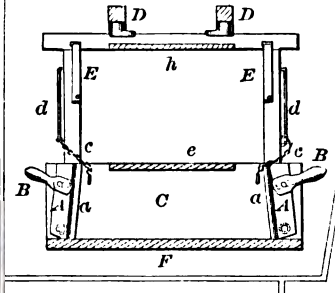

90562—J. Law—*Mop.*

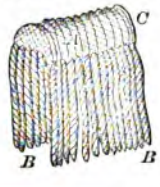

90567—H. McCown—*Nut Lock.*

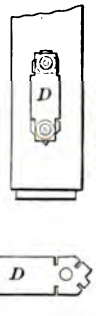

90563—B. S. Lawson—*Velocipede.*

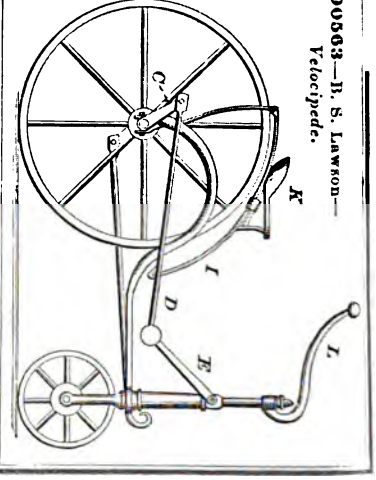

90561—L. B. Lathrop—*Reaper and Thresher.*

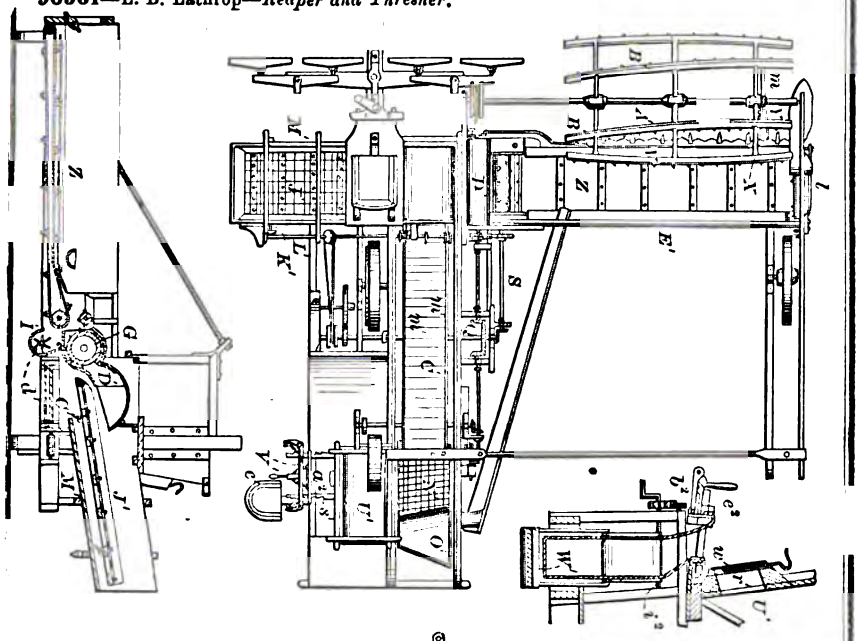

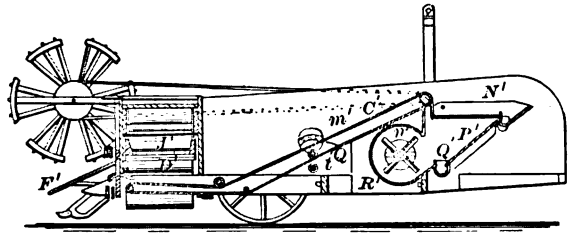

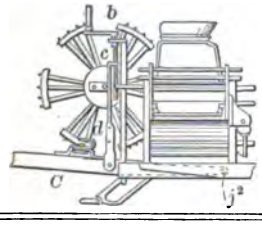

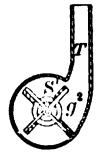

90568—P. McIntyre—*Bedstead Fastening.*

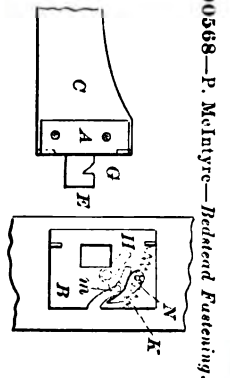

90566—G. E. Marshall—*Preparation of Paper Stock.*

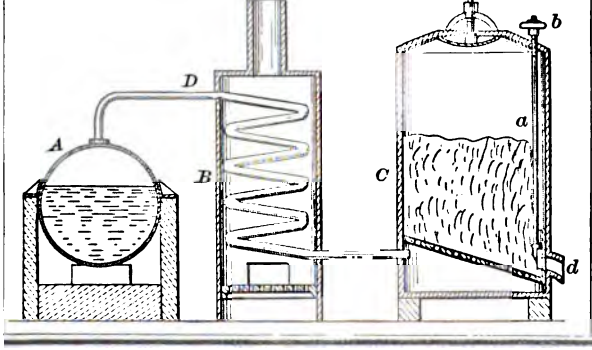

90571—B. Moser—*Curtain Fixture.*

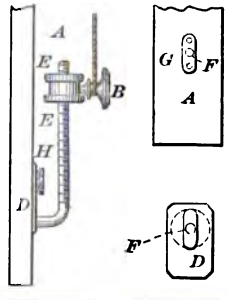

90569—McLain & Kelsey—*Car Coupling.*

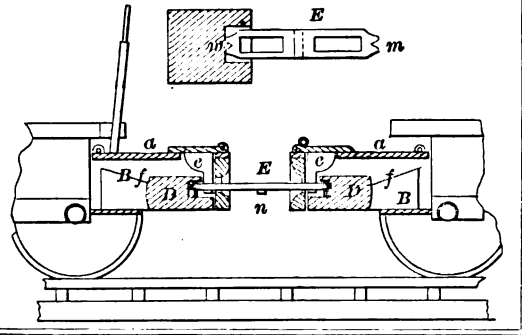

90572—C. Newman—*Lamp Extinguisher.*

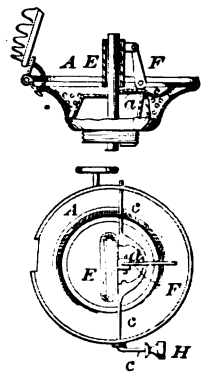

90570—E. Michael—*Fanning Mill.*

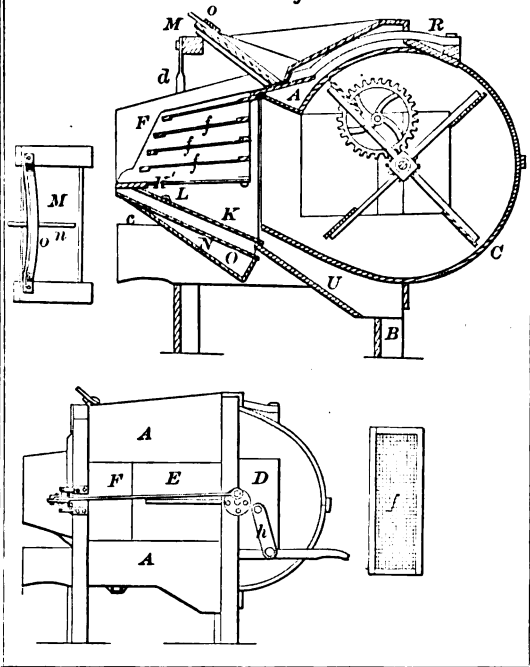

90574—Perkins & Crandall—*Corn Husker.*

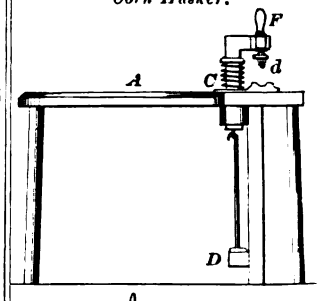

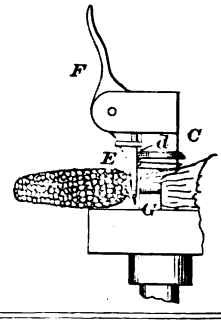

90575—G. W. R. Pollock—*Burglar Alarm.*

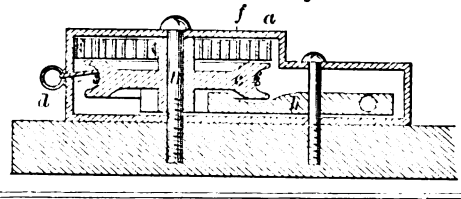

90573—W. B. Parsons—*Car Coupling.*

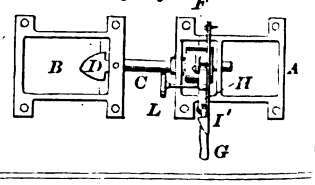

90578—Reyburn & Hunter—*Lightning Rod Coupling.*

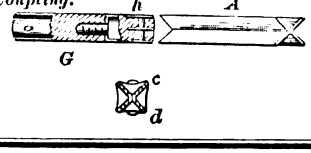

90576—A. J. Pritchard—*Pump.*

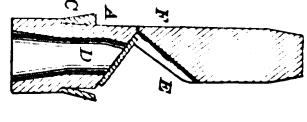

90561—L. B. Lathrop—*Reaper and Thresher.*

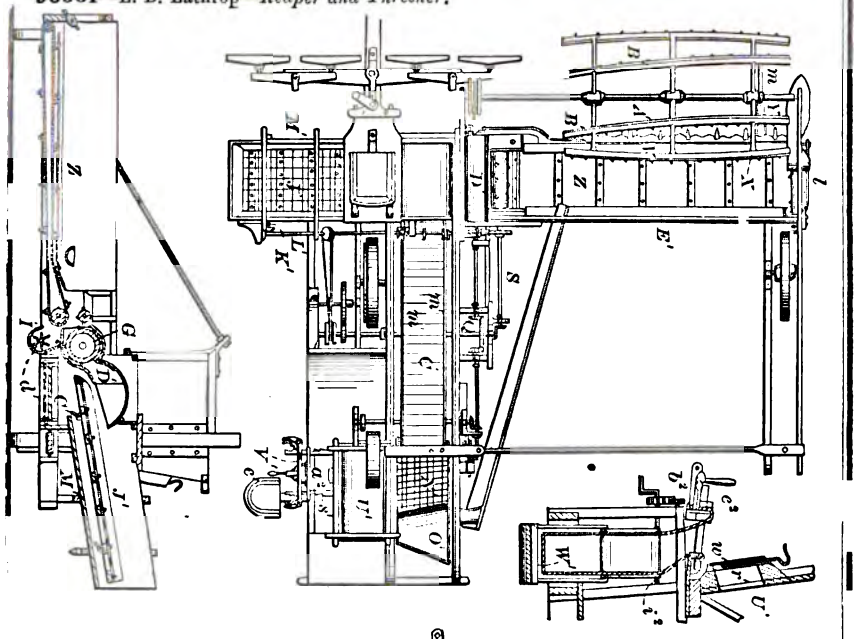

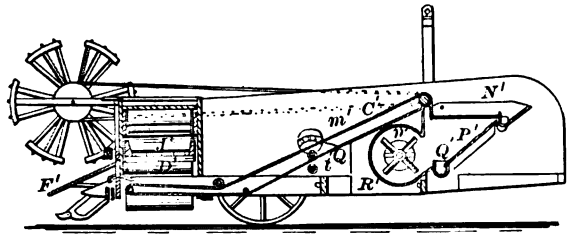

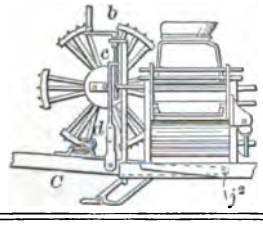

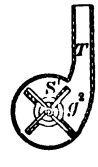

90568—P. McIntyre—*Bedstead Fastening.*

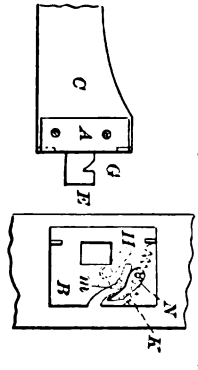

90566—G. E. Marshall—*Preparation of Paper Stock.*

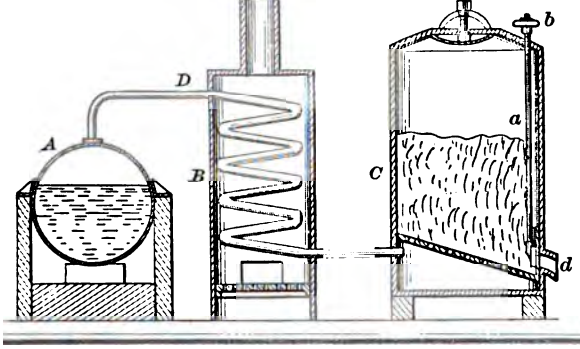

90571—B. Moser—
Curtain Fixture.

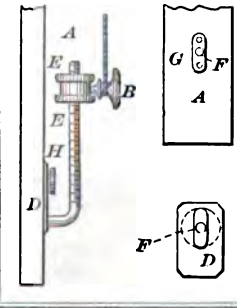

90583—H. R. Robbins—*Range.*

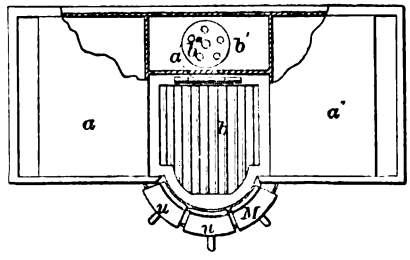

90584—J. Roberts—*Step Cover and Wheel Fender for Carriages.*

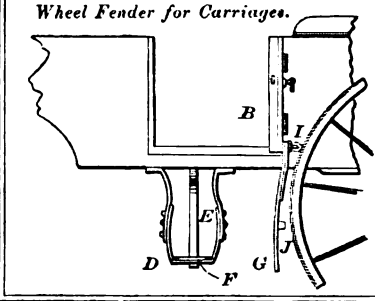

90585—P. C. Rowe—*Velocipede*

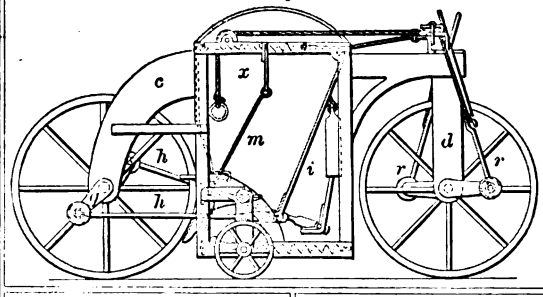

90586—J. A. Rumsey—*Pump.*

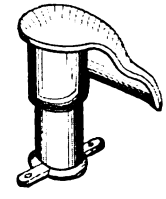

90588—F. S. Rutchman—*Meat Cutter.*

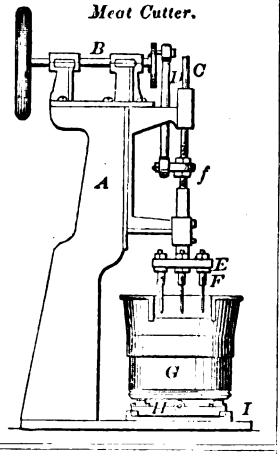

90589—D. Saunderson—*Metallic Roofing.*

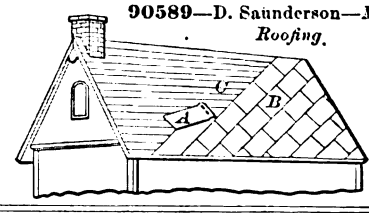

90590—C. Sharps—*Propeller.*

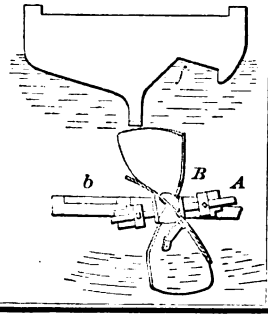

90591—F. Shickle—*For Moulding Pipe.*

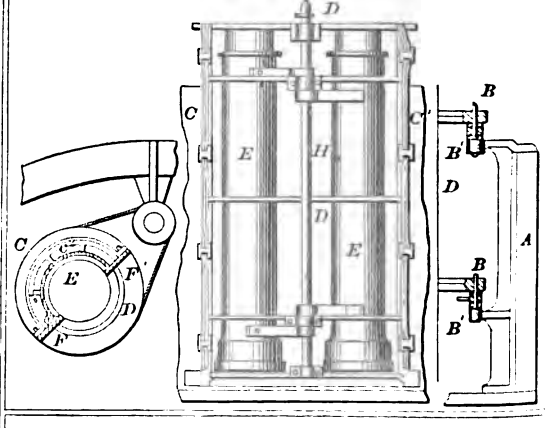

90587—R. J. Russell—*Skate.*

Fig. 1 Fig. 4

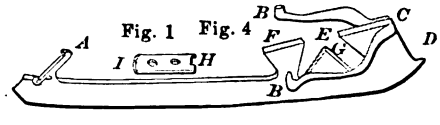

90592—A. J. Shunk—*Horse Rake.*

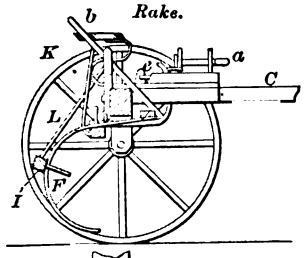

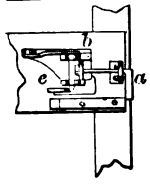

90595—J. Simpson—*Velocipede.*

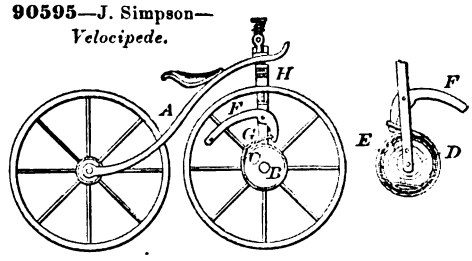

90593—G. F. Simonds—*Sickle Section.*

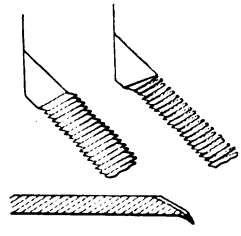

90594—J. Sissons—*Ice Cream Freezer.*

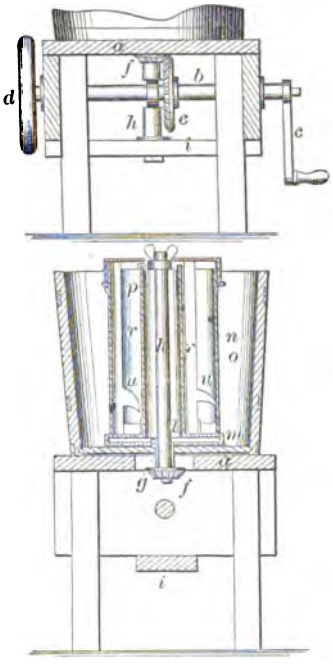

90596—S. Simpson—*Die.*

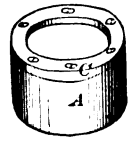

90597—A F. Smith—*Railway Rail.*

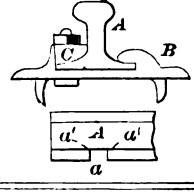

90598—C. P. Snow—*Washing Machine.*

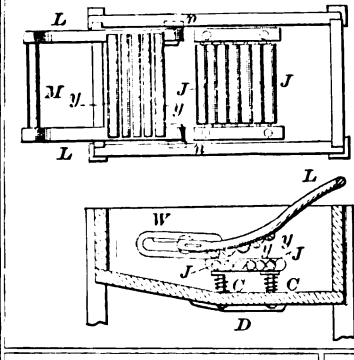

90599—G. K. Snow—*Paper Cuff.*

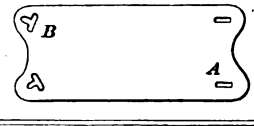

90600—T. S. Speakman—*Chimney Cowl.*

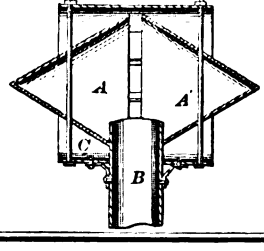

90601—C. & A. Spring—*Velocipede.*

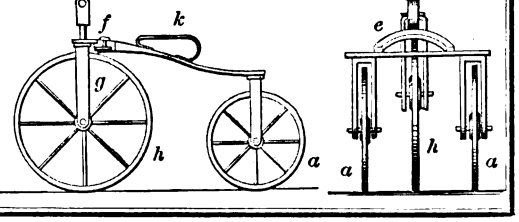

90602—J. Stacher—*For Pointing Bolts or Rivets.*

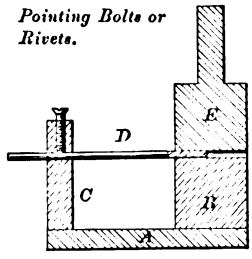

90603—G. K. Stillman—*Skate.*

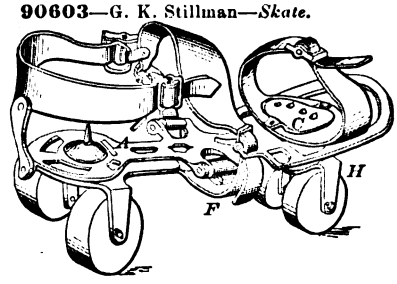

90607—W. Tibbals—*Cartridge.*

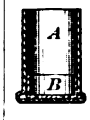

90604—O. O. Storle—*Plow Point.*

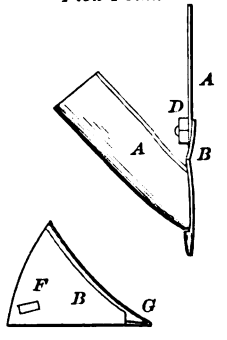

90606—Thompson & Ingram—*Cap for Feeding Bottles.*

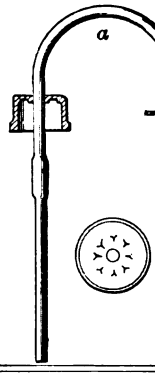

90608—T. R. Timby—*Pin Case.*

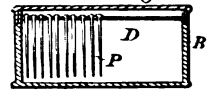

90609—N. Tufts—*Gas Light Governor Case.*

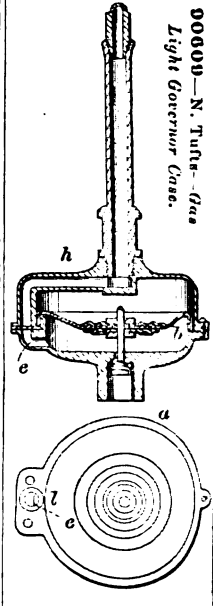

90605—L. Sumner—*Band Cutter for Threshing Machines.*

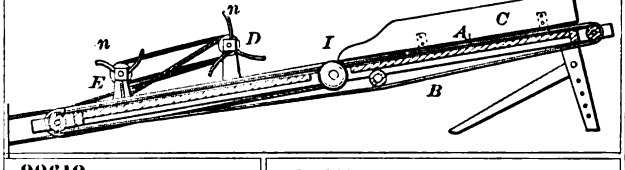

90610—Ulrich & Hachmeister—*Harness Ornament.*

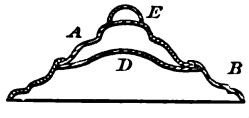

90611—G. Unger—*Fence Post Socket.*

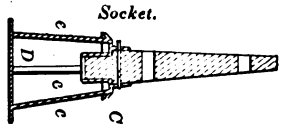

90612—A Viridet—*Bridle Bit.*

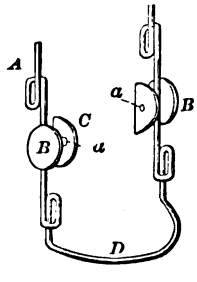

90613—H. & V. Vogel—*Piano Stool.*

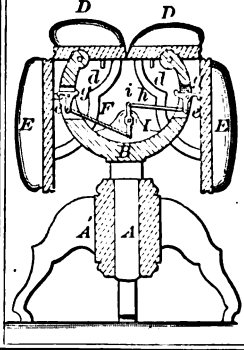

90614—F. Von Martinl—*Fire Arm.*

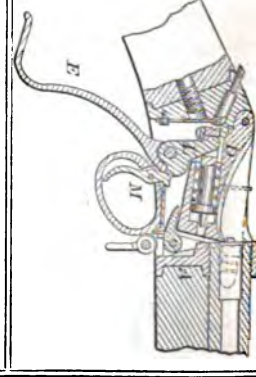

90615—L. R. Wallace—*Boiler Furnace.*

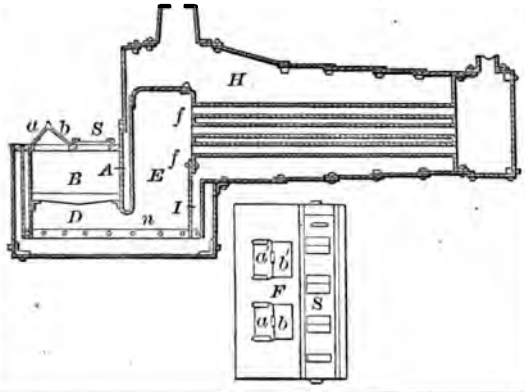

90618—G. F. Waters—*Pruning Implement.*

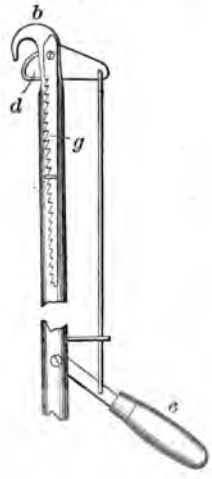

90619—J. H. Williams—*Bird Cage.*

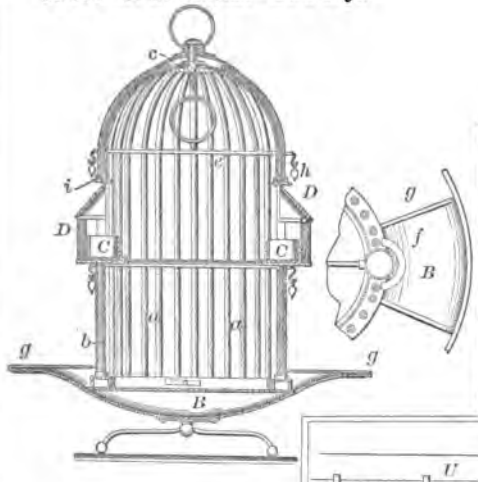

90621—G. W. N. Yost—*Harvester.*

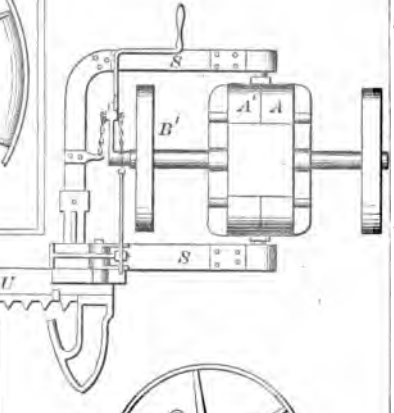

90620—C. V. Woerd—*Watch Work.*

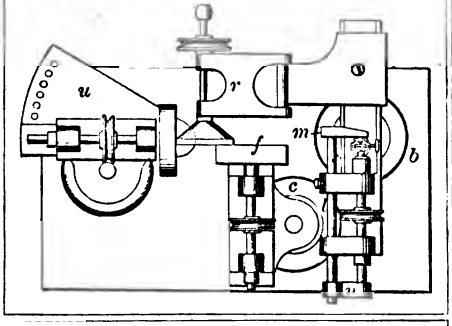

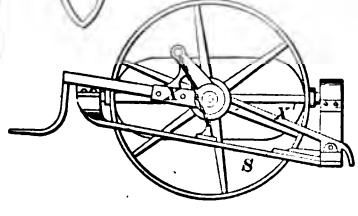

90623—E. Andrews—*Saw Strap.*

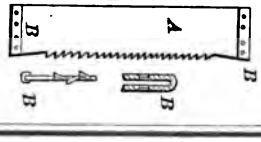

90625—F. & F. Babcock—*Blind Fastener.*

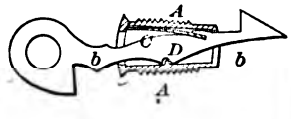

90622—Young & Grumbine—*For Boring Posts and Pointing Rails.*

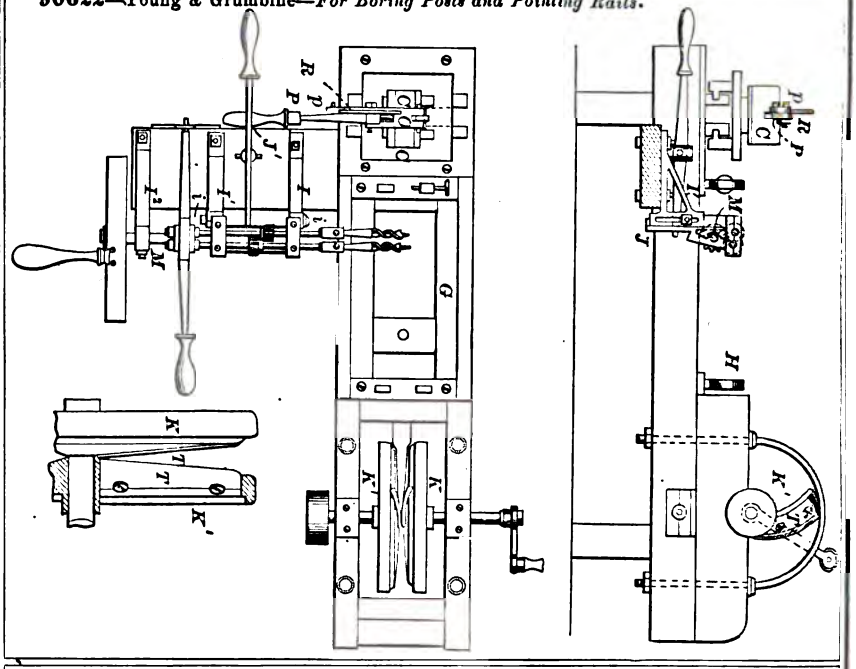

90624—C. F. Annan—*Paper Bag Machine.*

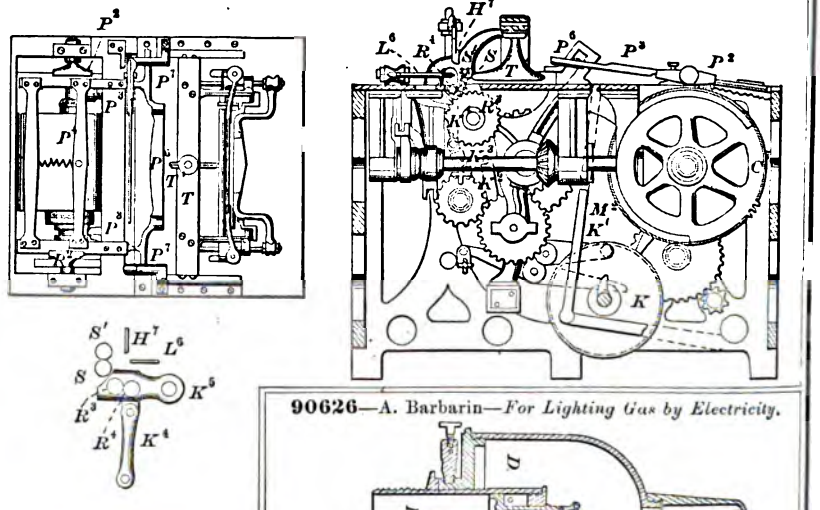

90626—A. Barbarin—*For Lighting Gas by Electricity.*

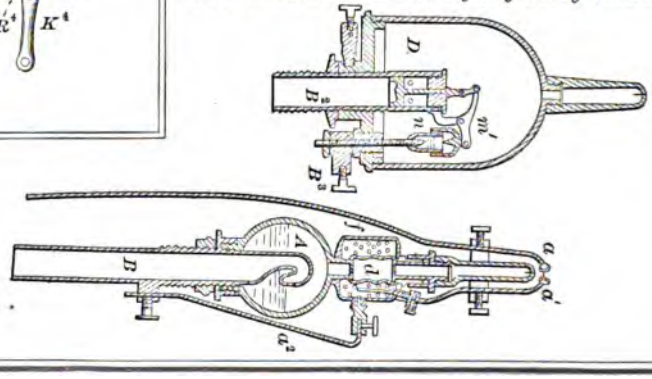

90627—A. A. Barker—*Loom.*

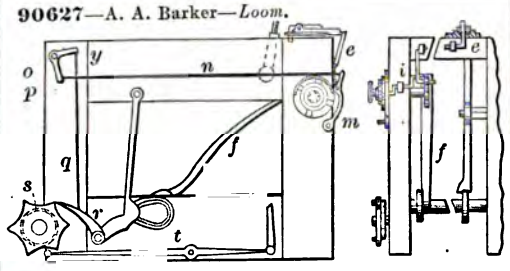

90628—C. Bates—*Harrow.*

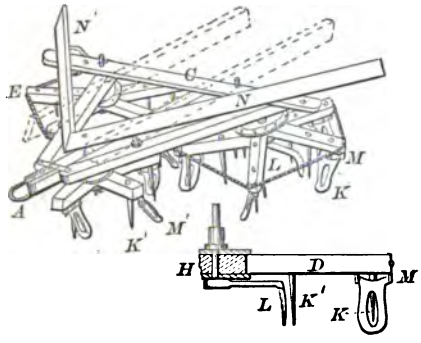

90630—P. D. Beckwith—*Hot Air Furnace.*

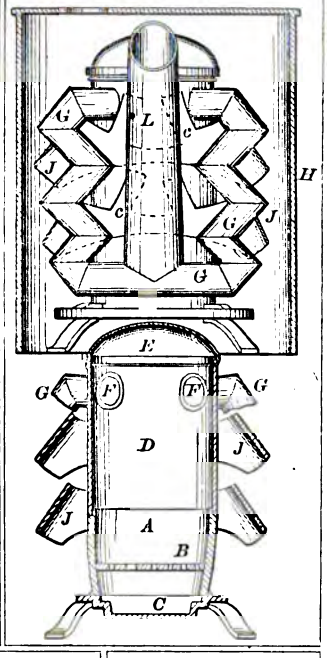

90633—Brisco & Blackham—*Felting Machine.*

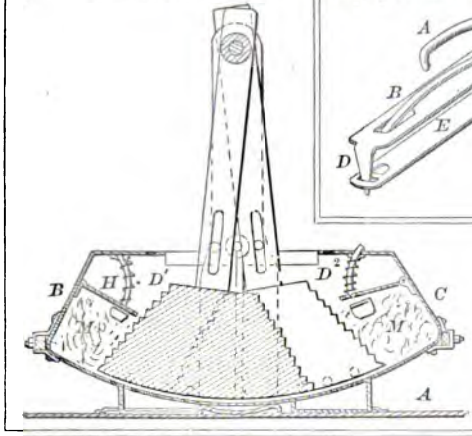

90632—C. V. Boughton—*Safety Pocket Attachment.*

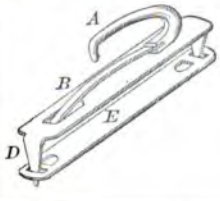

90629—E. E. Bean—*For Lighting and Extinguishing Gas by Electricity.*

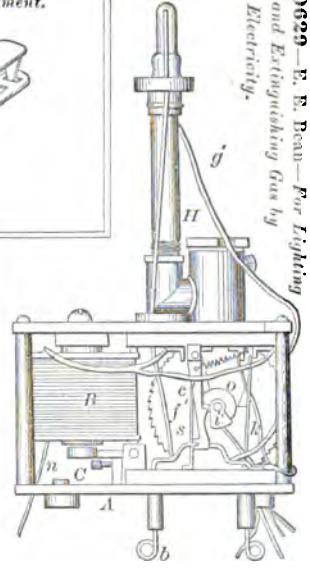

90635—W. K. Cavett—*Slide Valve.*

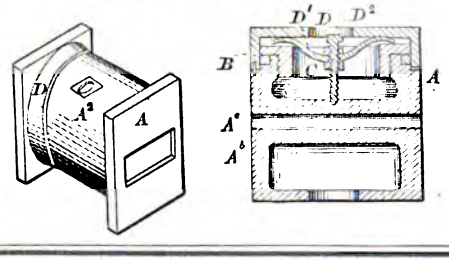

90631—J. F. Blood—*Button Fastening.*

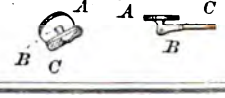

90634—H. Buffington—*Gun Capper.*

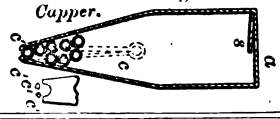

90636—H. D. Chance—*Burglar Alarm.*

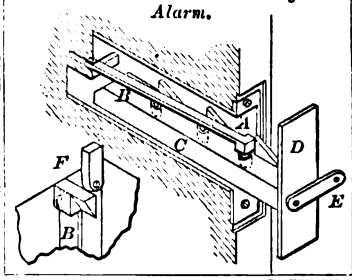

90638—H. Clendenen—*Saw Set.*

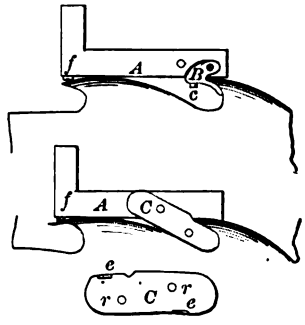

90640—A. Lee Crow—*Corn Planter.*

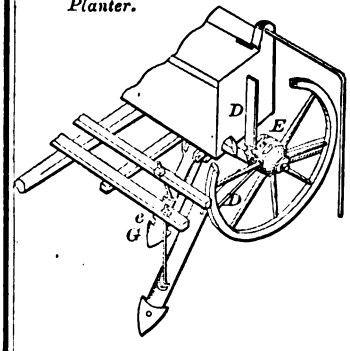

90641—E. A. Crownhart—*Trace Buckle.*

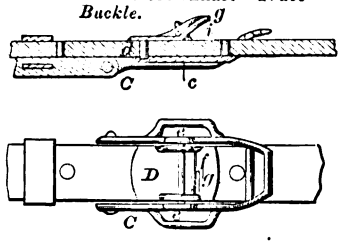

90639—W. G. Comstock—*Cultivator and Weeder.*

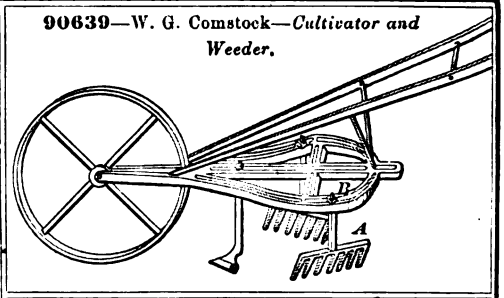

90637—I. H. Clark—*Chemical Fire Engine.*

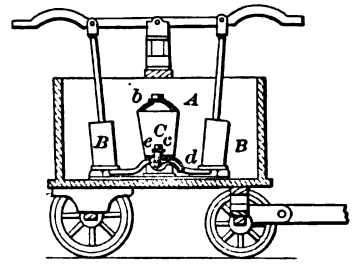

90642—S. B. Dodge—*Forging Hammer.*

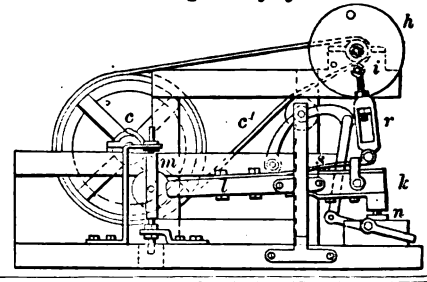

90643—S. Dunbar—*Steam Engine Cut-off.*

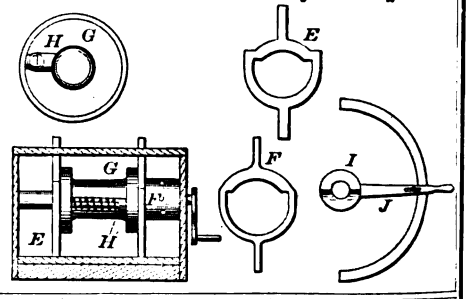

90645—B. W. Dunklee—*Grate.*

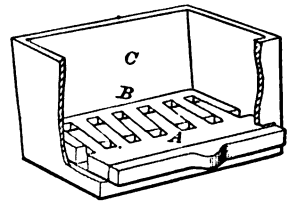

90644—C. F. Dunderdale—*Gas Generator and Carburettor.*

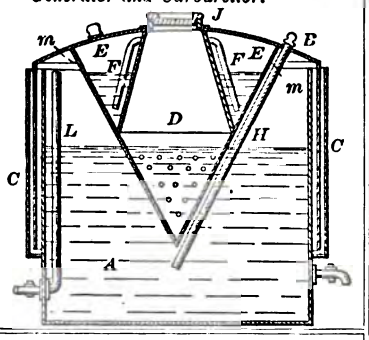

90647—J. Elson—*Watch.*

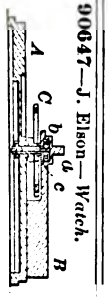

90648—B. Esch—*Boot Crimping Machine.*

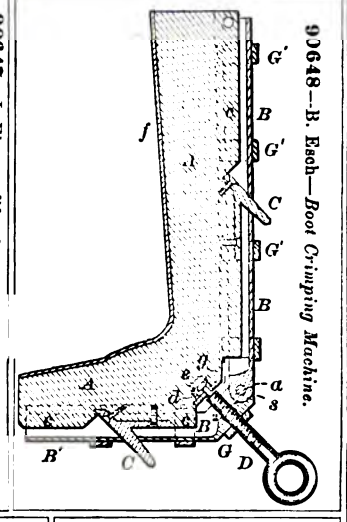

90646—T. A. Edison—*Electrographic Vote Recorder.*

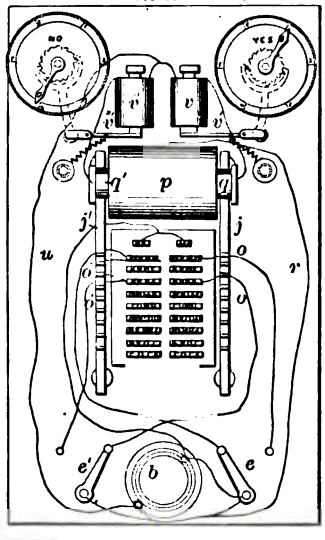

90651—W. E. Fischer—*Lasting Machine.*

90649—I. B. Farquhar—*Beehive.*

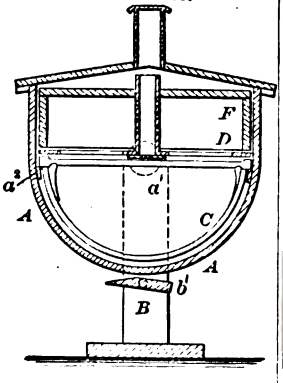

90650—W. E. Fischer—*For Lasting Boots and Shoes.*

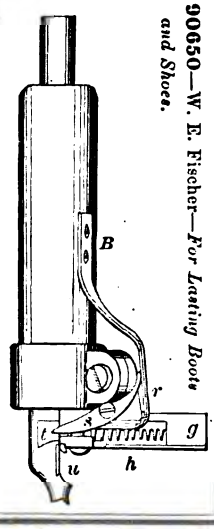

90652—C. P. Fisher—*Harrow.*

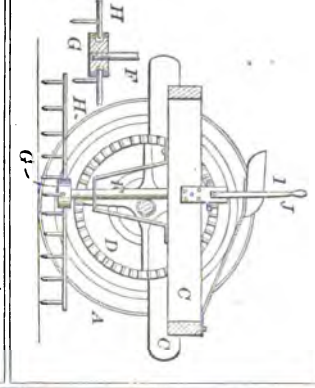

90653—J. F. Fisher—*Fertilizer and Seed Drill.*

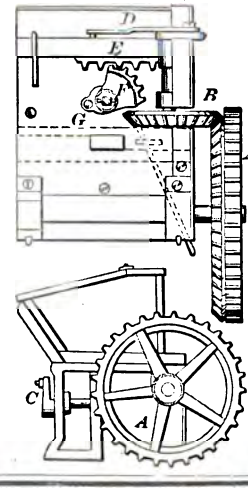

90654—W. Fletcher—*Bell.*

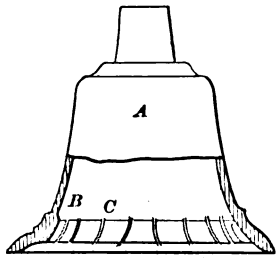

90658—D. Garrison—*For Gilding.*

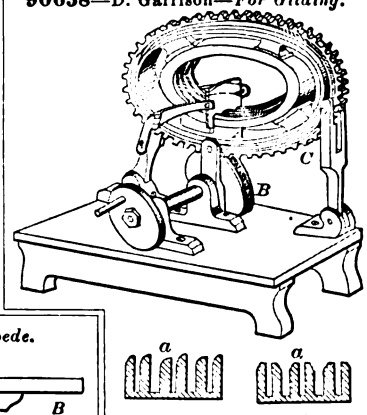

90655—G. Fowler—*For Adjusting Eccentrics to Connecting Rods.*

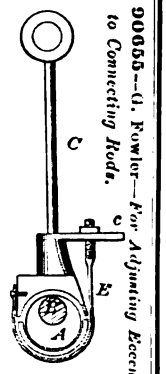

90656—W. Frankel—*Velocipede.*

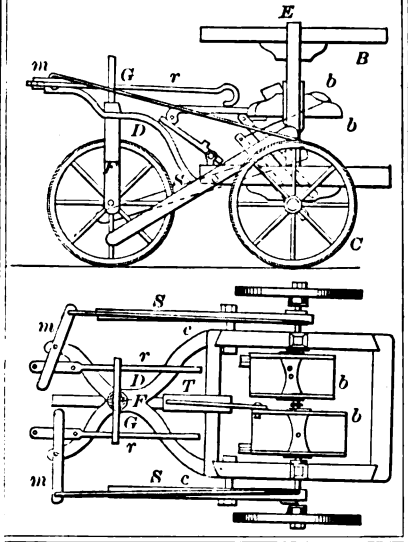

90660—Graves & Clark—*Stove.*

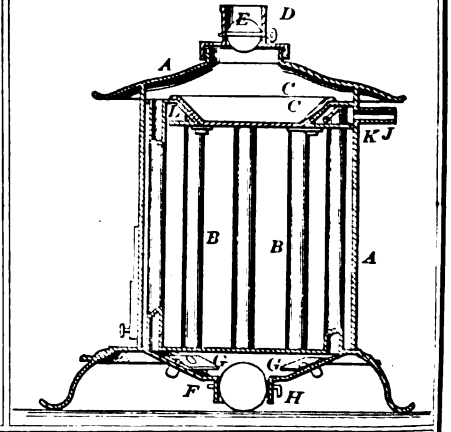

90657—P. G. Gardiner—*Air Spring for Railroad Cars.*

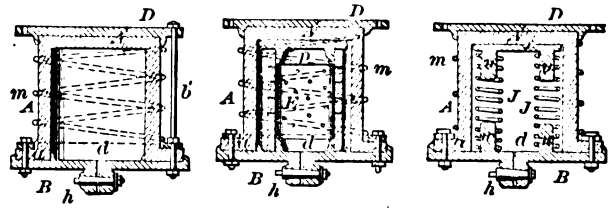

90659—Gates & Fritchey—*Vapor Burner.*

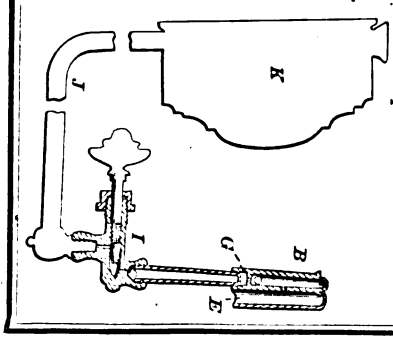

90661—J. L. Hall—*Bolt Machine.*

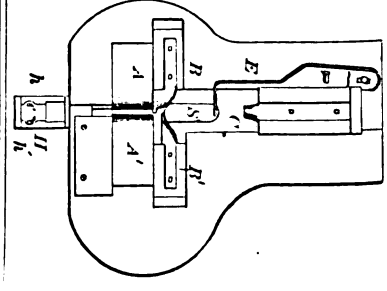

90662—T. C. Hargrave—*Water Meter.*

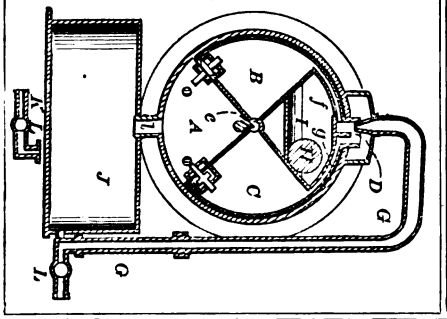

90663—B. J. Hoffacker—*Envelope.*

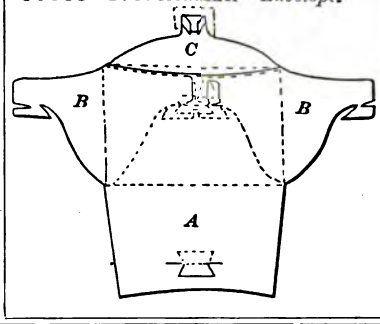

90664—C. Holmes—*For Scouring and Setting out Leather.*

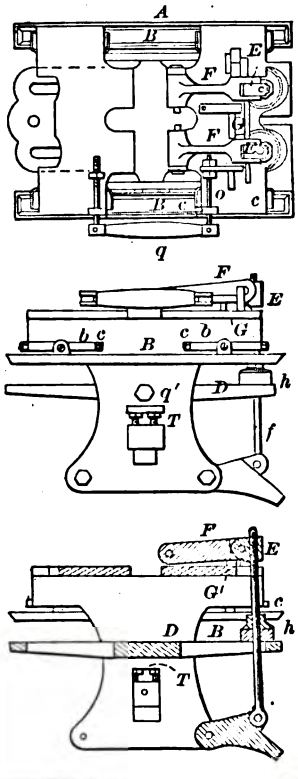

90665—G. Jones—*Churn.*

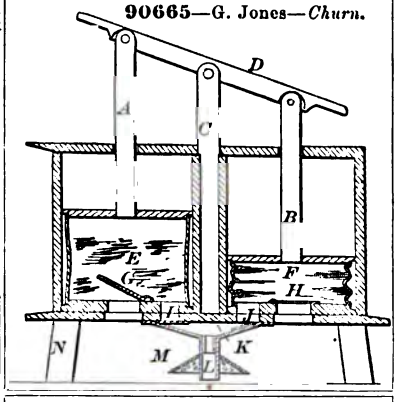

90667—J. W. Kingman—*Metallic Roofing.*

90666—J. H. Jones—*Harvester.*

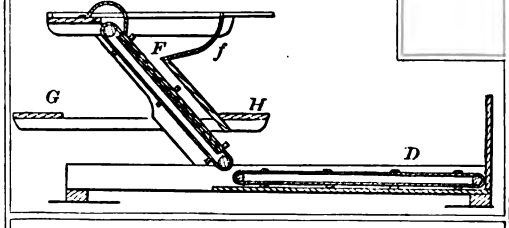

90668—M. Kleeman—*Brad Setter.*

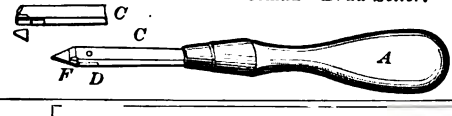

90669—J. L. Kreider—*Harness.*

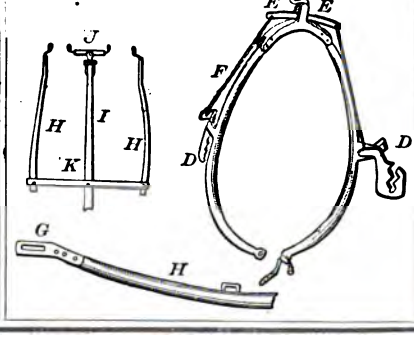

90670—S. Lauchli—*Drilling Apparatus.*

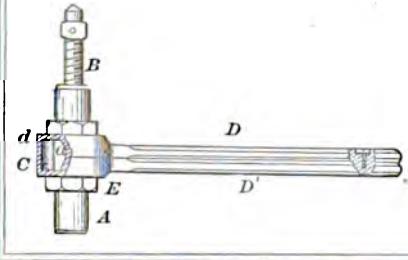

90671—J. E. Lutz—*Horse Power.*

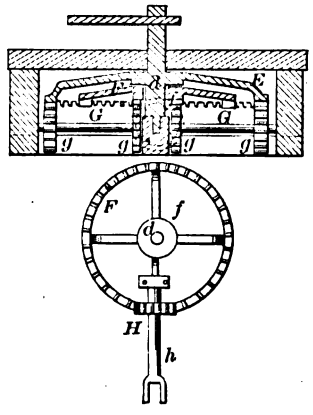

90672—J. Maerhoffer—*Cider Press.*

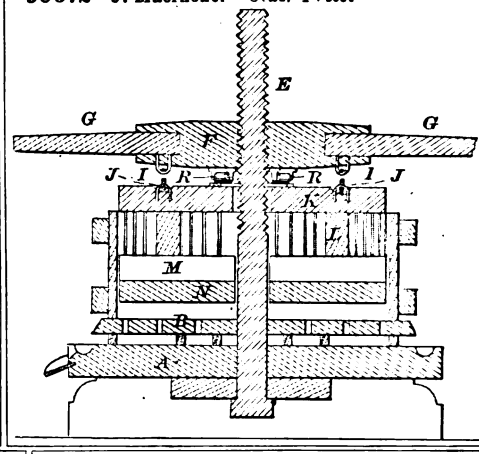

90679—C. Murdock—*Barrel Stave.*

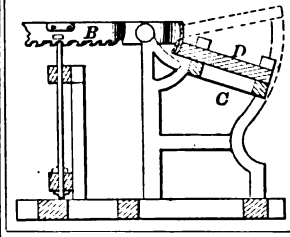

90674—McManus & Merryman—*Churn.*

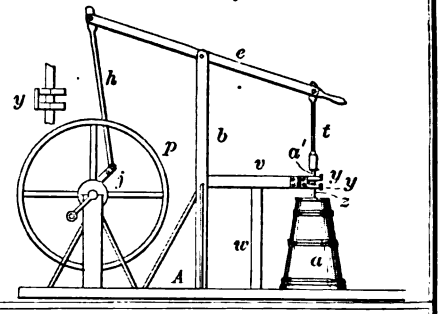

90676—J. Montgomery—*Coffee Pot, Boiler, Digester, Oven and Lamp.*

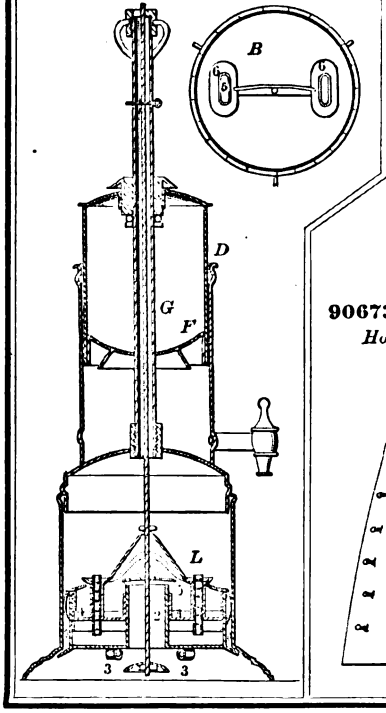

90680—J. H. Nale—*Wagon Seat.*

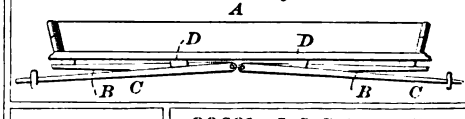

90673—J. Mayer—*Hoop Skirt.*

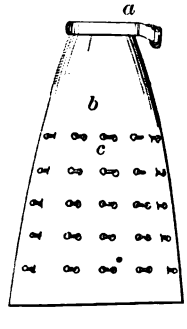

90681—J. S. Palmer—*For Making Button Hooks.*

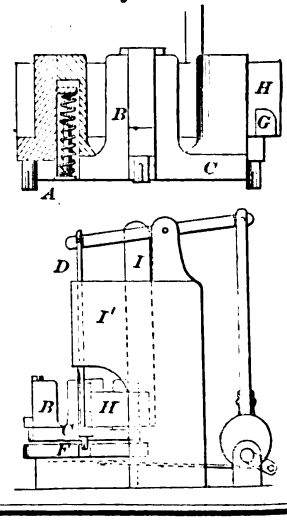

90678—G. R. Moore—*Gas and Water Meter.*

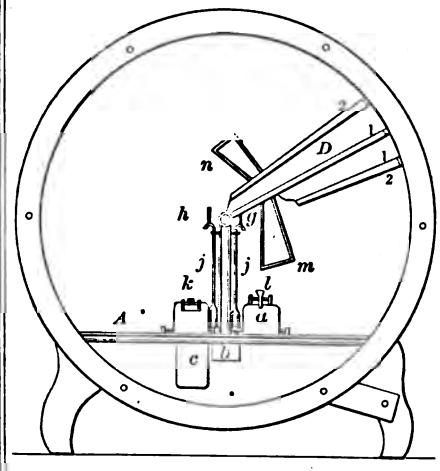

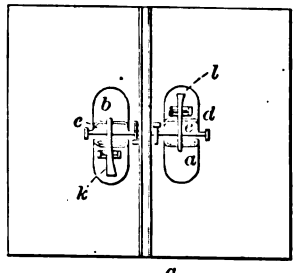

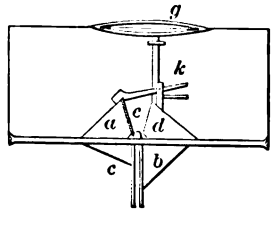

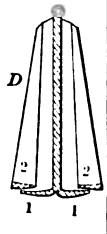

90682—O. E. Pillard—*Lock.*

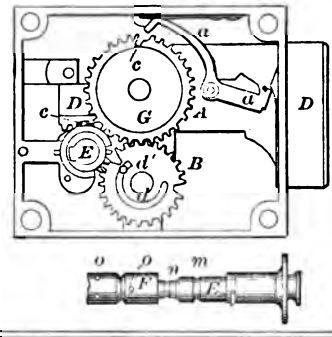

90683—O. E. Pillard—*Lock.*

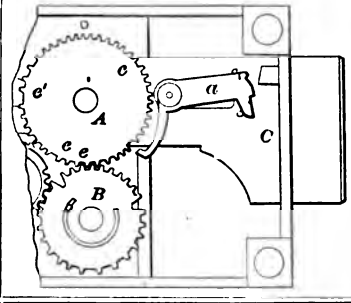

90684—J. F. Pond—*Chimney Cowl.*

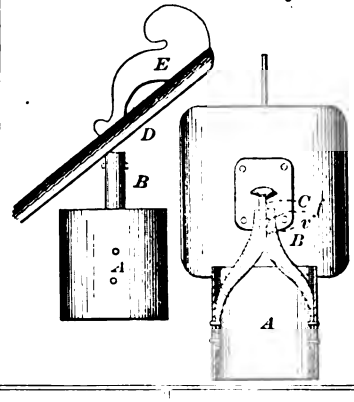

90688—Reed & Fowle—*Dry Earth Water Closet.*

Fig. 1

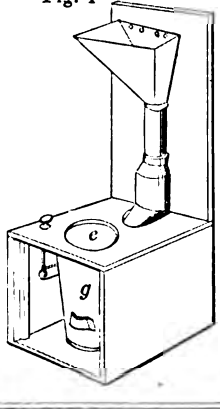

Fig. 2

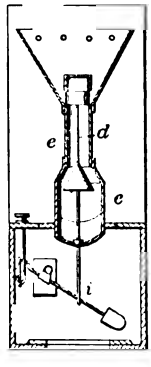

90685—W. P. Porter—*Nut Lock.*

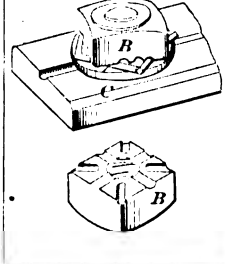

90686—L. Preston—*Spring Butt.*

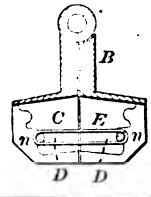

90687—Rathmann & Johnson—*Velocipede.*

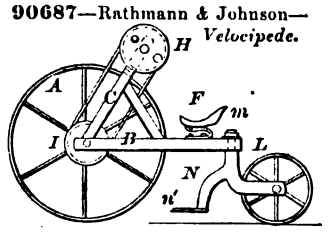

90690—B. D. Sanders—*Manufacture of Bungs.*

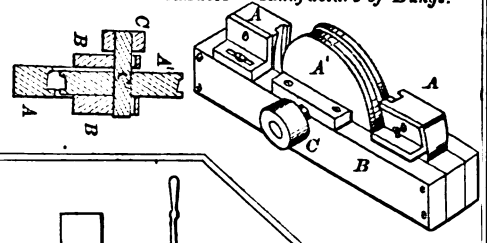

90689—I. S. Roland—*Spoke Lathe.*

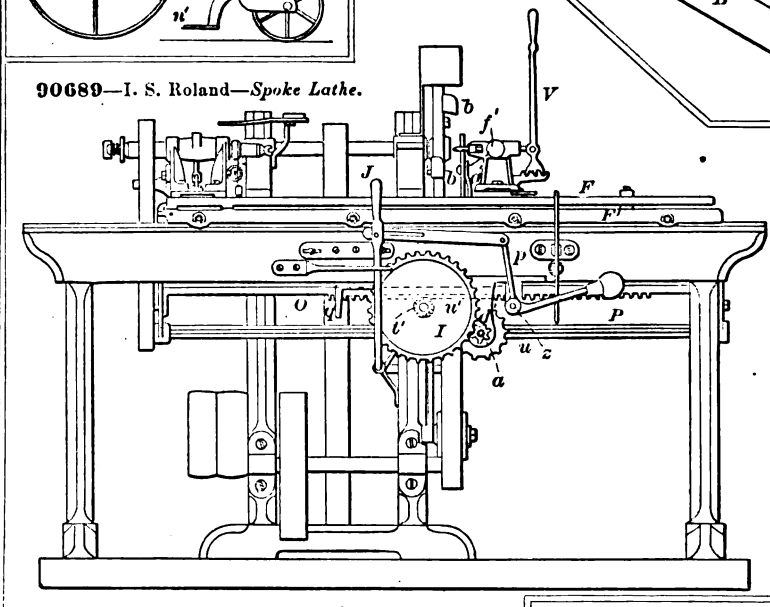

90692—N. Senbert—*Alarm-Lock.*

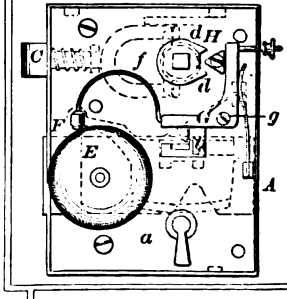

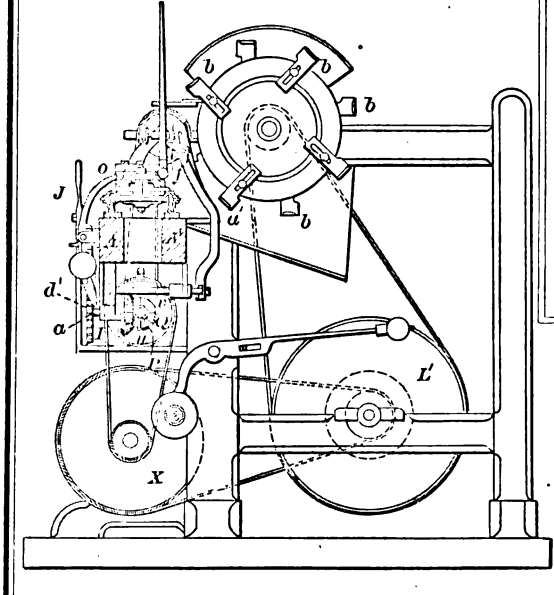

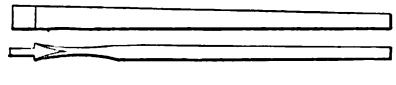

Fig. 5½

90691—F. Le Roy Benour—*Hoe and Rake.*

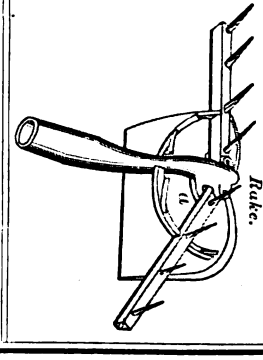

90678—G. R. Moore—*Gas and Water Meter.*

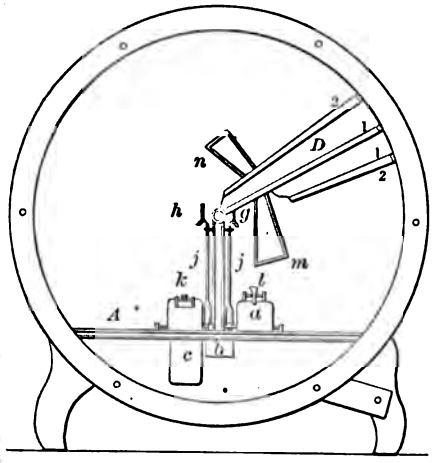

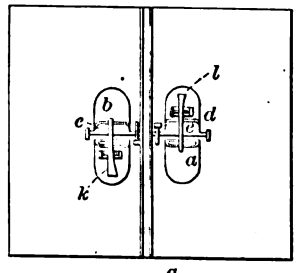

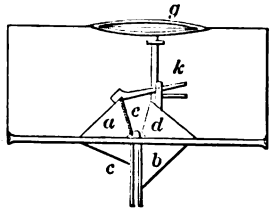

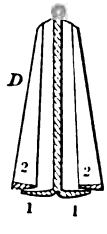

90682—O. E. Pillard—*Lock.*

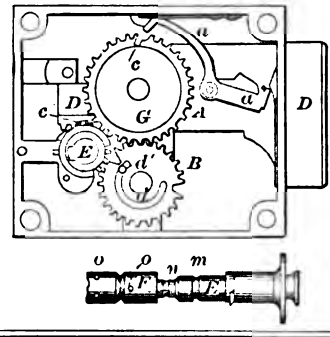

90683—O. E. Pillard—*Lock.*

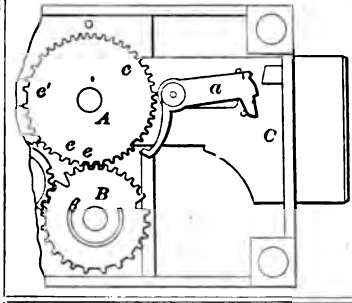

90684—J. F. Pond—*Chimney Cowl.*

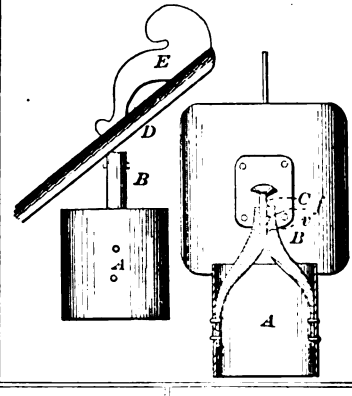

90688—Reed & Fowle—*Dry Earth Water Closet.*

Fig. 1

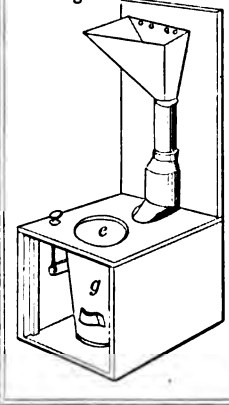

Fig. 2

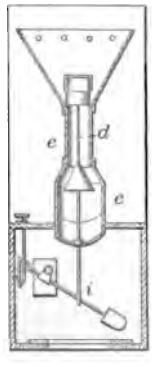

90685—W. P. Porter—*Nut Lock.*

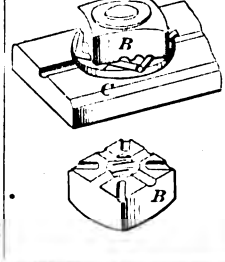

90686—L. Preston—*Spring Butt.*

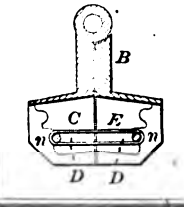

90700—L. W. Taylor—*Hoop.*

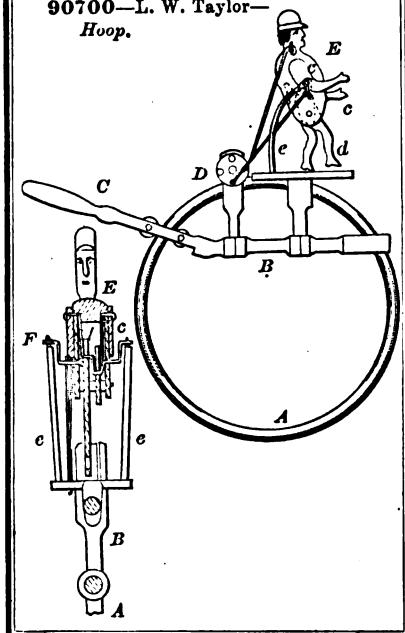

90703—J. J. Tucker—*Hedge Planter.*

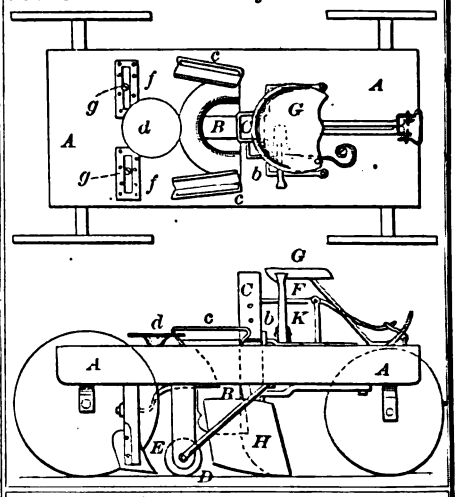

90704—S. D. Tuttle—*Punch and Screwdriver.*

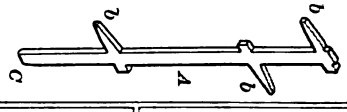

90705—C. Von Bonhorst—*Dental Mouth Meter.*

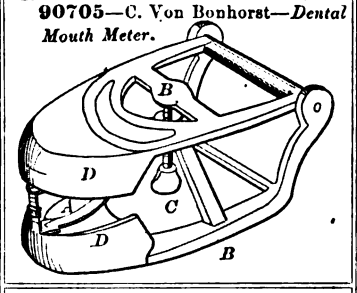

90706—C. Von Bonhorst—*Dental Articulating Cup.*

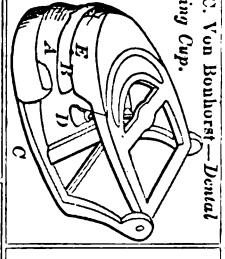

90709—G. E. Waring, Jr.—*For Deodorizing Water Closets.*

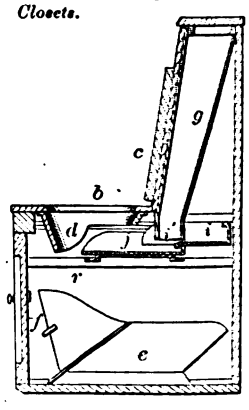

90707—A. B. Walters—*Coffee Pot.*

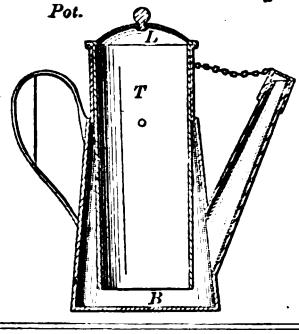

90710—G. H. White—*Ferrule for Shoe Strings.*

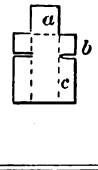

90712—D. D. Whitney—*Stove Shelf.*

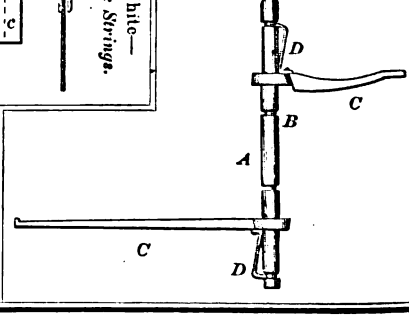

90708—Waltz, Soliday & Hamsher—*Railway Gate.*

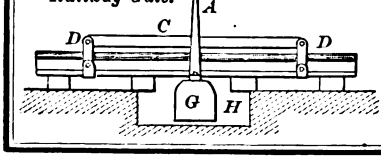

90711—J. W. White—*For Manufacturing Webbing for Ladies' Fans.*

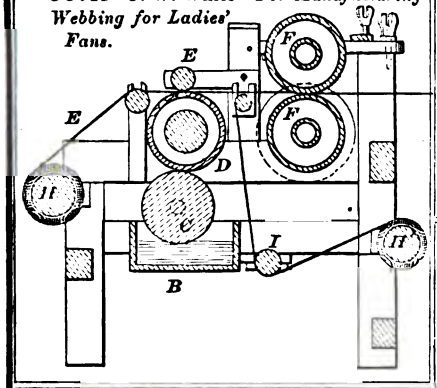

90714—E. G. Woodside—*Carriage Wheel.*

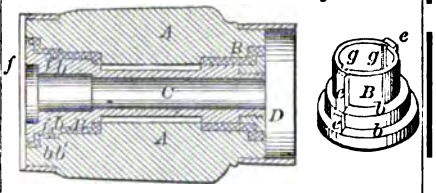

90716—J. Agate—*Beer Cooler.*

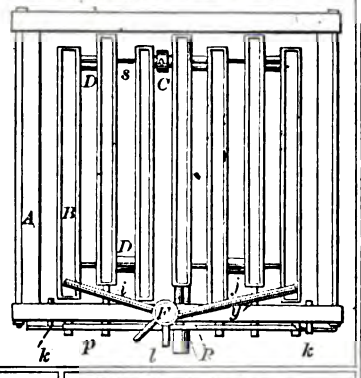

90713—J. P. Wile—*Harrow.*

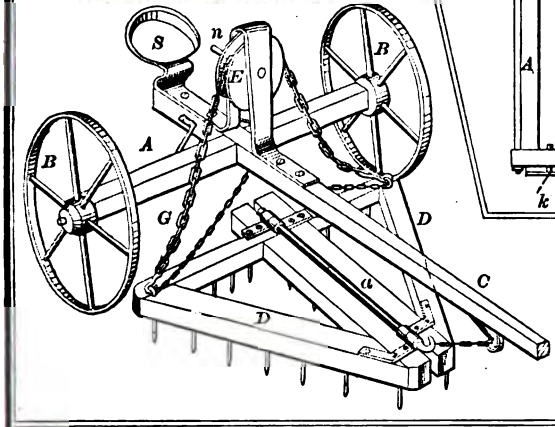

90720—A. C. Bacon—*Heater.*

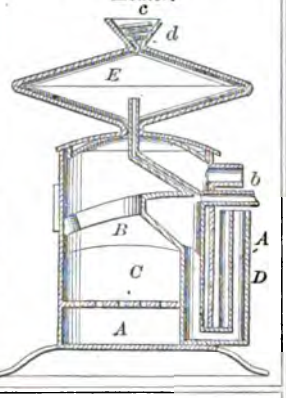

90718—J. S. Appel—*Pumping Lever.*

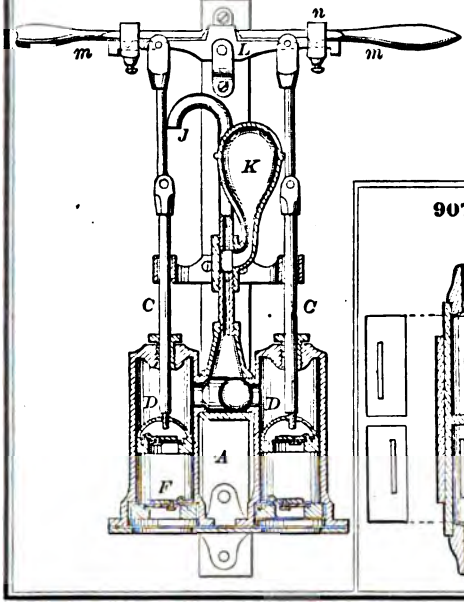

90717—R. N Allen—*Water Meter.*

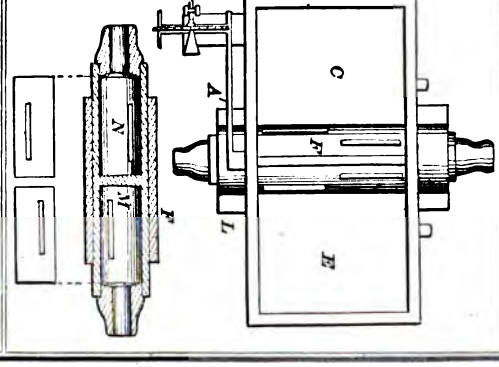

90719—M. Armstrong—*Stove.*

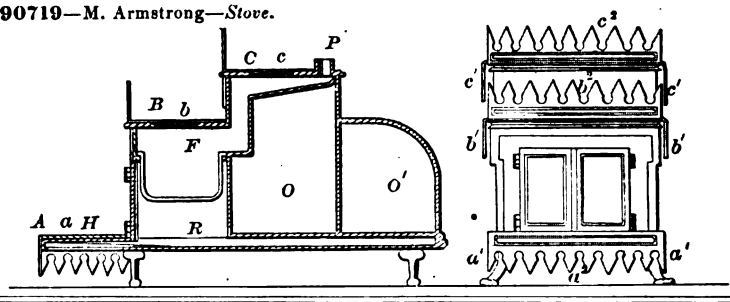

90722—N. Breed—*Cotton Seed Planter.*

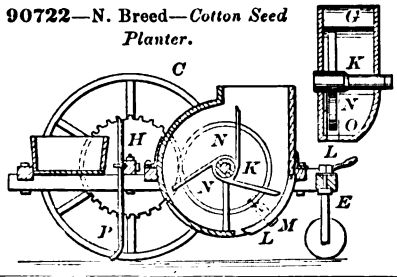

90721—A. Bailey—*Steam Engine.*

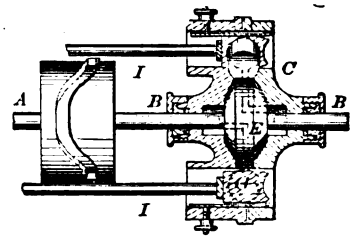

90723—G. C. Buell—*Velocipede.*

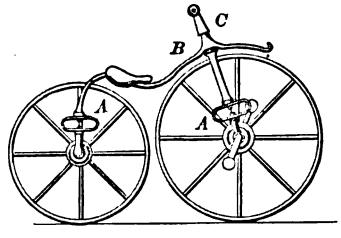

90724—J. Burgess—*Soldering Furnace.*

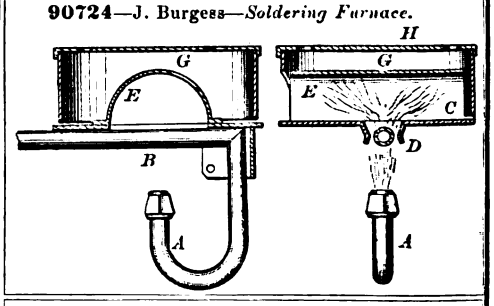

90725—D. S. Butler—*Tug Buckle.*

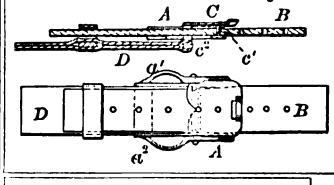

90726—L. Chapman—*For Forming Bits for Axes.*

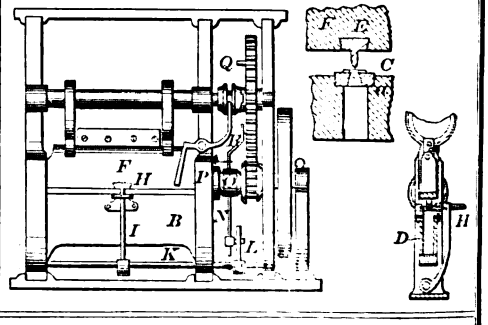

90727—R. A. Chesebrough—*For Preventing Canals, &c., from being Closed by Ice.*

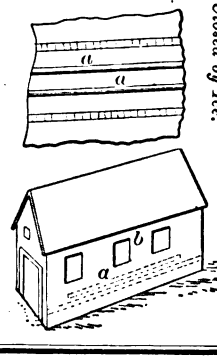

90728—I. Church, Jr.—*Lubricator.*

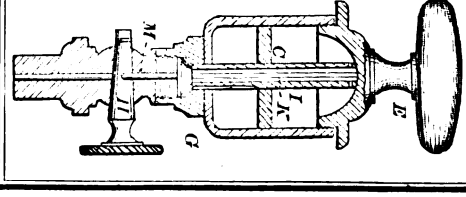

90730—J. W. Currier—*Car Coupling.*

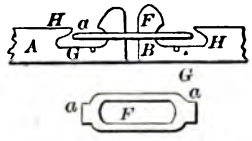

90732—J. Curtis—*Projectile.*

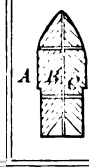

90731—J. W Currier—*For Holding Interfering Bands in Place.*

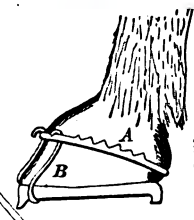

90733—H. T. Cushman—*Composition Paper Polisher.*

90734—S. C. Darden—*Cotton Cultivator.*

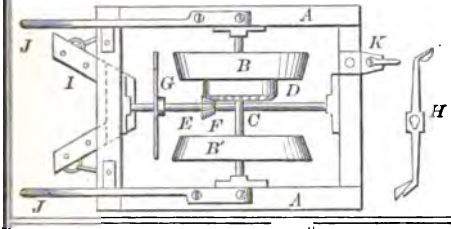

90736—E. Evans—*Clevis.*

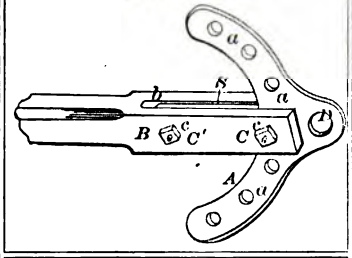

90735—M. Easley—*Beehive.*

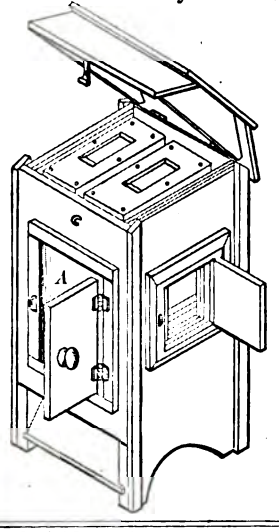

90738—J. Foster, Jr.—*Boat Detaching Apparatus.*

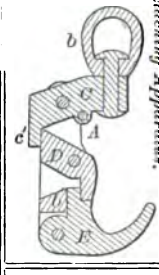

90740—C. Gunther—*Coating Threads with Metals.*

90737—C. H. Finson—*Meat Chopper.*

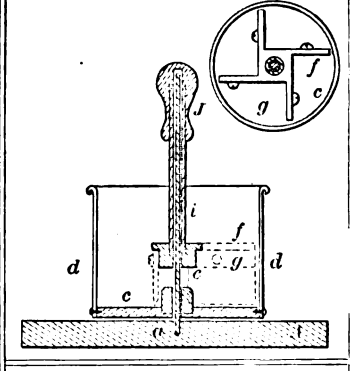

90741—J. W. Goodale—*Fire Arm.*

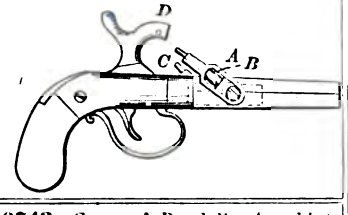

90739—E. P. Furlong—*For Forming Shirt Bosoms.*

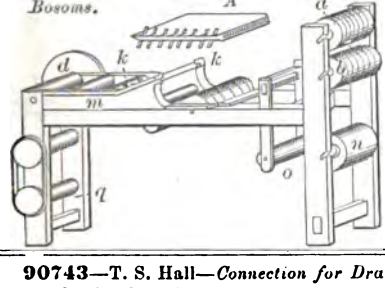

90742—Grover & Randall—*Attaching Picks to Handles.*

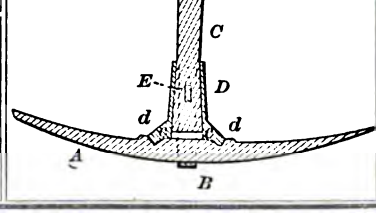

90743—T. S. Hall—*Connection for Draw Bridge Signals.*

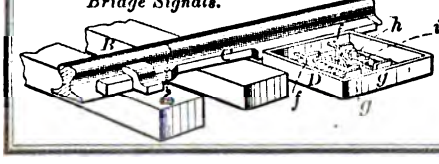

90744—T. S. Hall—*Switch Alarm Connection.*

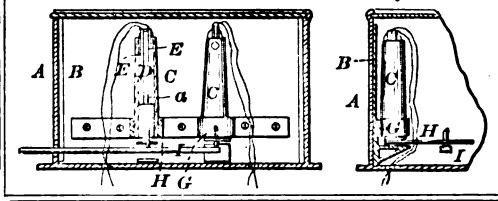

90748—T. W. Hawkins—*Fan.*

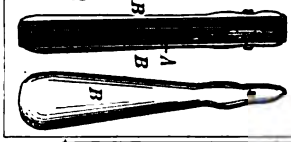

90745—C. A. Harris—*Railway Chair.*

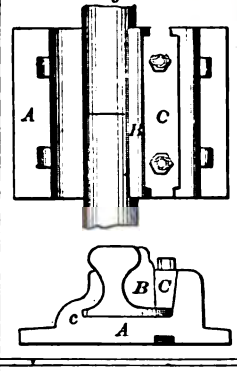

90746—C. J. Hartmann—*Looking Glass Attachment.*

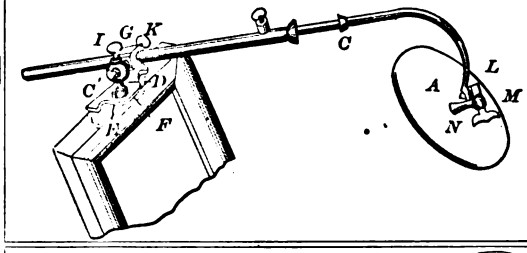

90747—C. Hartzell—*Plow.*

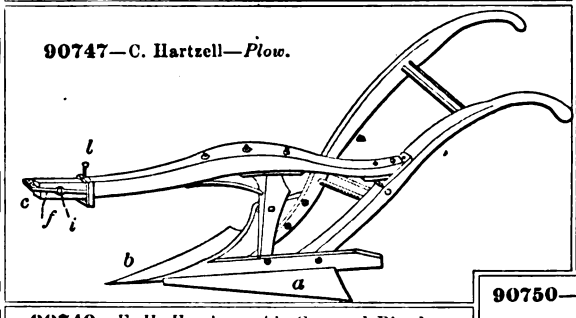

90755—W. A. Ives—*Auger Bit.*

90750—E. C. Hickman—*Flour Sifter*

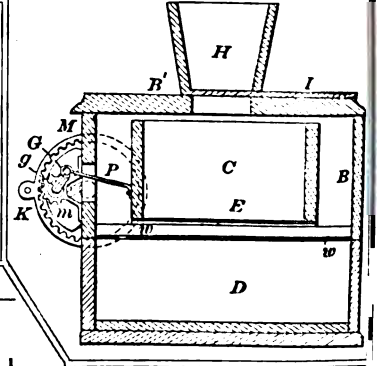

90749—E. H. Hawley—*Air Gun and Pistol.*

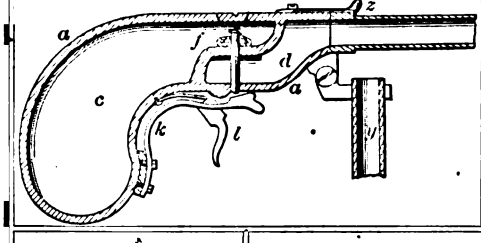

90751—C. R. Hight—*Fence.*

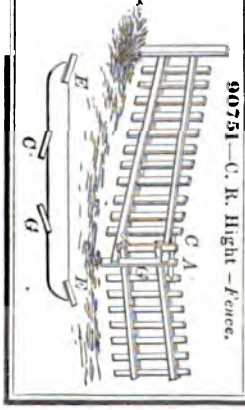

90752—S. R. Hockman—*Hulling Machine.*

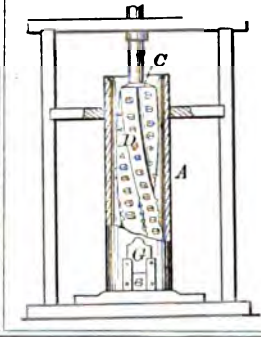

90753—J. Honecker—*Boot and Shoe Top.*

90756—W. J. Keep—*Stove.*

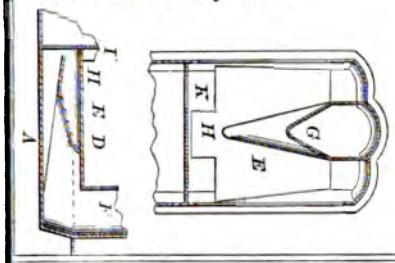

90757—A. J. Langworthy—*Shaft Coupling.*

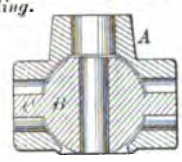

90758—S. Leach—*Churn.*

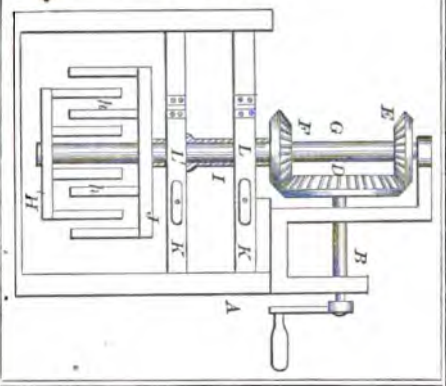

90760—F. Ludlow—*Horticultural Building.*

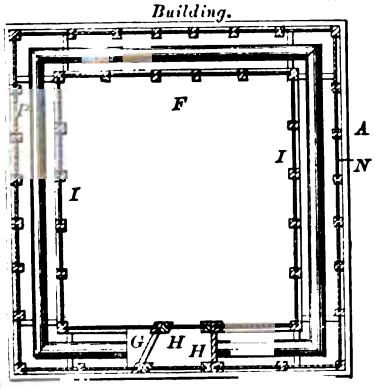

90761—E. T. Mainwaring—*Cotton Bale Tie.*

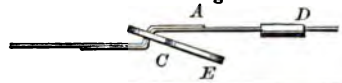

90763—J. Marshall—*Bath Brush.*

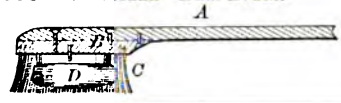

90759—H. C. Lewis—*Auger Bit.*

90764—J. McCaskey, Jr.—*Clothes Dryer.*

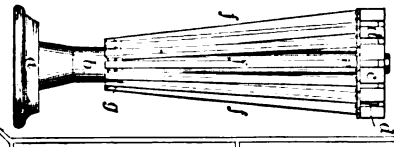

90766—J. A. McClelland—*For Treating Collodion and its Compounds.*

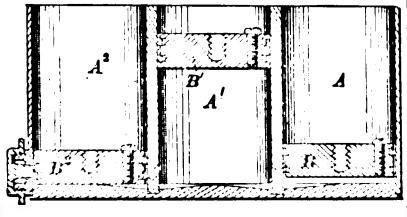

90765—J. A. McClelland—*Dental Plate.*

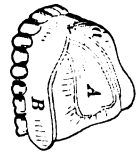

90769—H. B. Middaugh—*Hinge.*

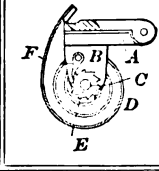

90767—J. A. McKay—*Bridge.*

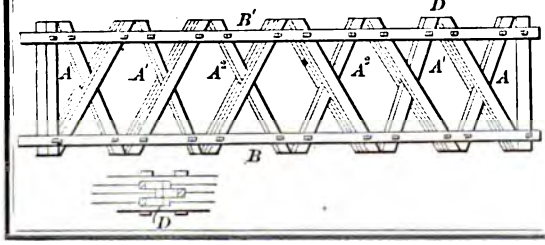

90768—C. S. Meeker—*Clamp.*

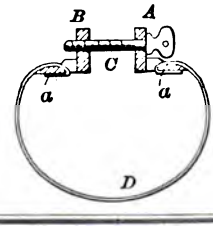

90770—O. F. Momany—*Roller Grain Drill.*

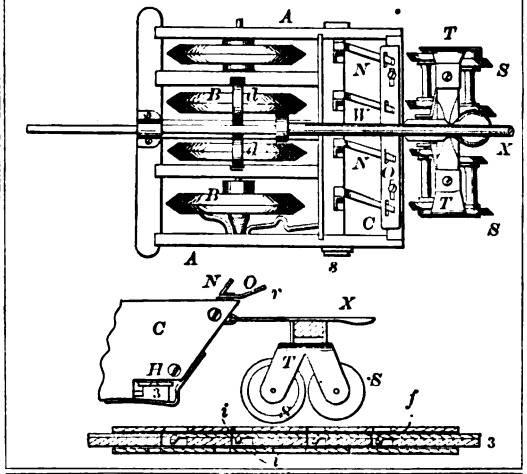

90771—D. Moore—*Bake Oven.*

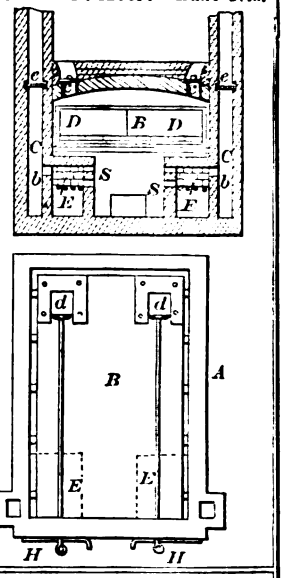

90772—D. Morgan—*For Desulphurizing Coal.*

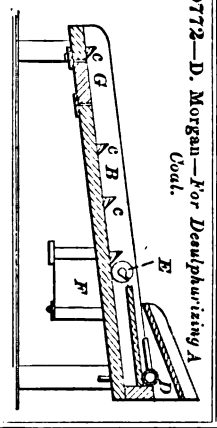

90774—A. Nielsen—*Velocipede.*

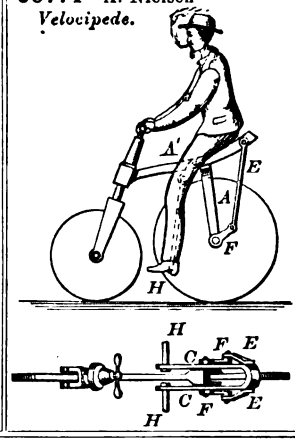

90775—C. G. Nye—*Tire Heating Oven.*

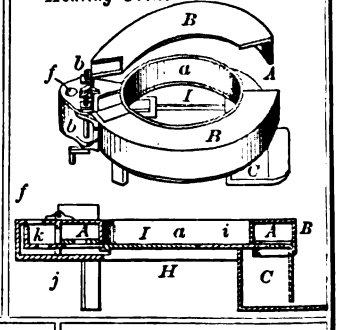

90773—E. G. Nichols—*Fence Post.*

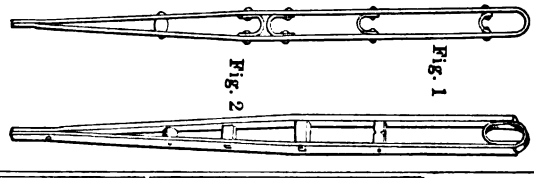

90776—T. O'Keefe—*Bedstead Fastening.*

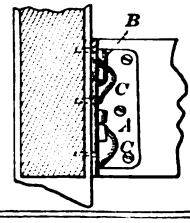

90777—A. B. Paul—*Amagalmator for Gold and Silver.*

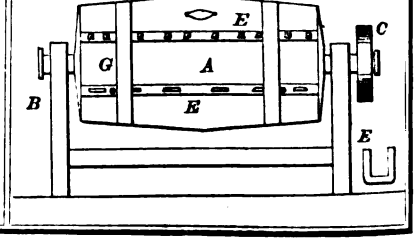

90780—C. D. Purdy—*Bedstead Fastening.*

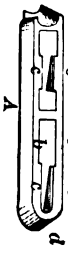

90781—S. W. Putnam, Jr.—*Bearing for Spindles and Shafts.*

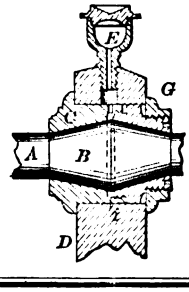

90778—I. C. Pennington—*Steam Generator Furnace.*

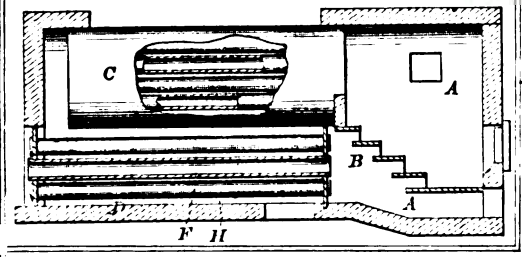

90783—C. H. Riggs—*Auxiliary Jaw for Planer Chuck.*

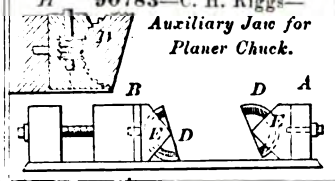

90782—G. P. Reed—*Velocipede.*

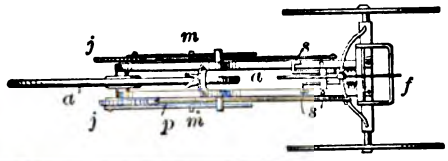

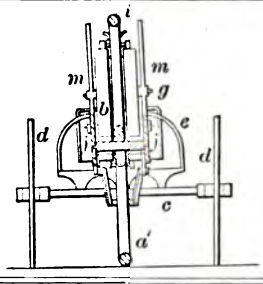

90788—Schultz & Renne—*File Machine.*

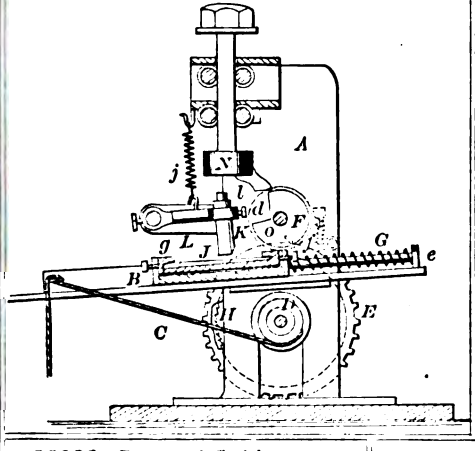

90784—W. Roberts—*Saw File.*

90785—O. Ruggles—*Stove Pipe Shelf.*

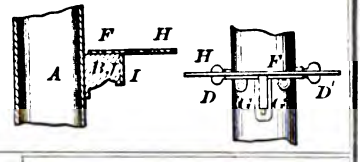

90789—Seymour & Whitlock—*For Wiring Blind Slats.*

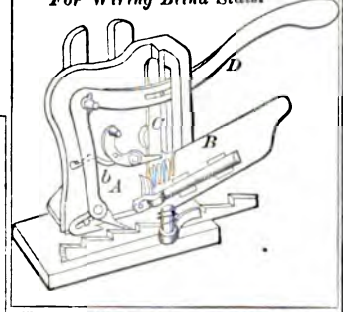

90786—Rumsey & Smith—*Pipe Driver.*

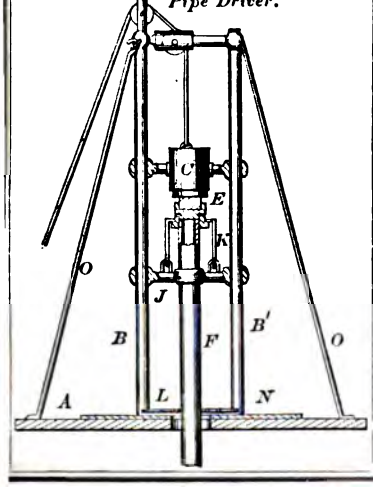

90787—Rumsey & Smith—*Drill for Rock and Earth with Attached Tube.*

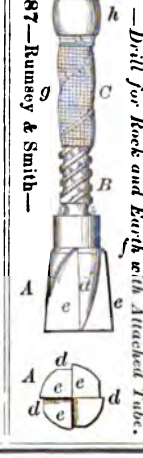

90790—S. Simpson—*Tea and Coffee Pot.*

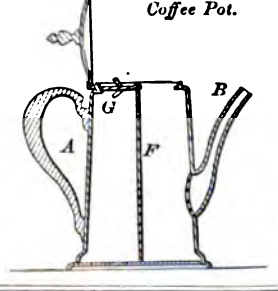

90791—G. A. Smith—*Saw Guide and Jointer.*

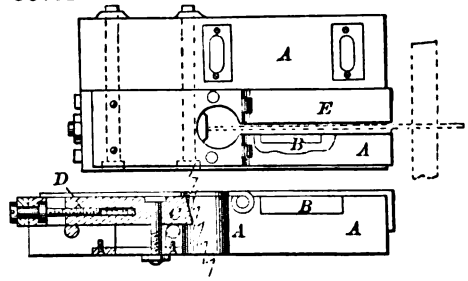

90794—Taylor & Coale—*Safety Valve.*

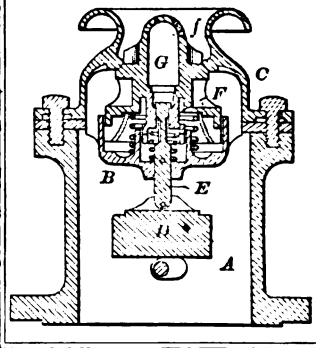

90793—F. Suter—*Musical Instrument.*

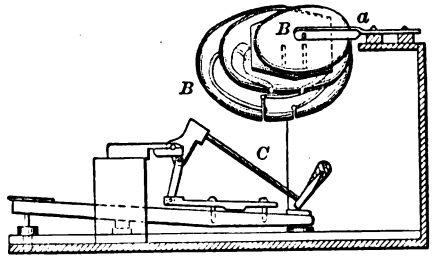

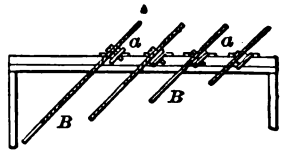

90792—W. S. Smoot—*Fire Arm.*

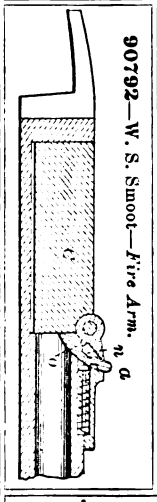

90795—H. Thielsen—*Car Truck.*

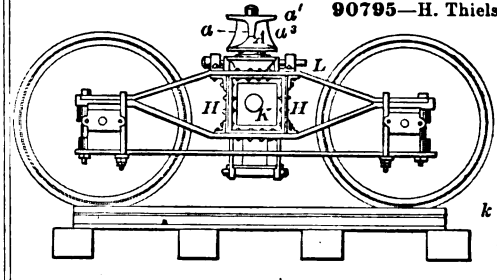

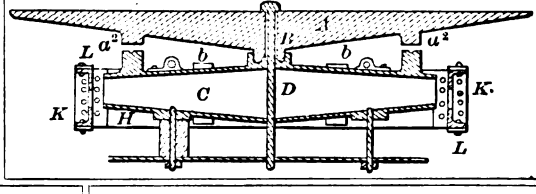

90798—J. H. Tomlinson—*Bucket.*

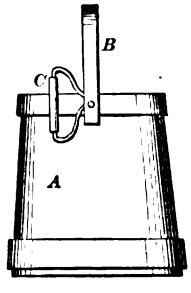

90796—S. & J. Thomas—*Oven for Iron Furnaces.*

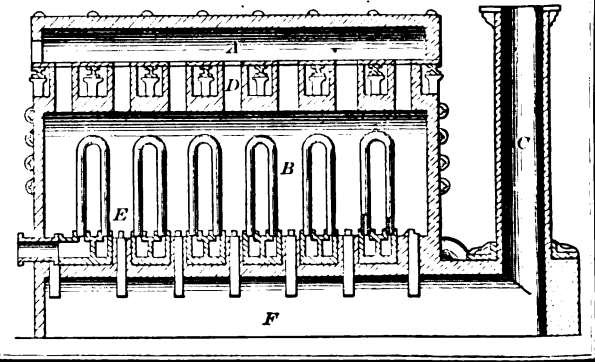

90797—H. Thompson—*Velocipede.*

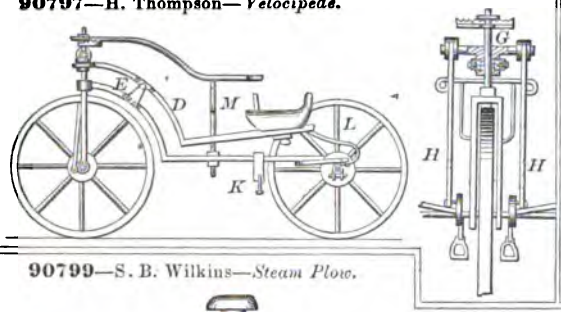

90802—C. L. Wuestenberg—*Dental Cup.*

90799—S. B. Wilkins—*Steam Plow.*

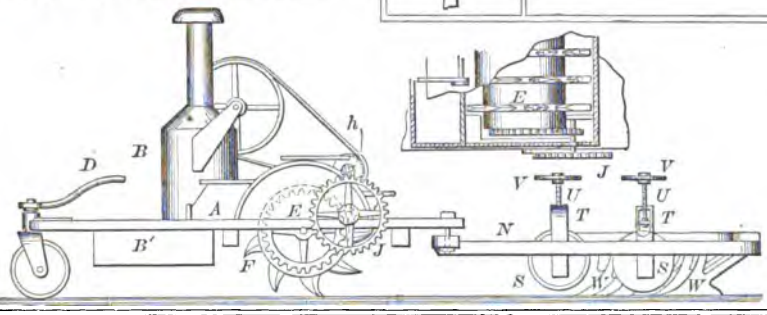

90800—J. B. Willett—*Vise.*

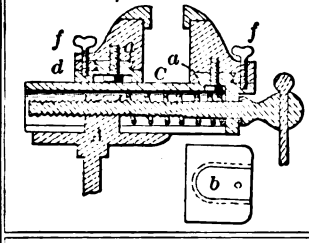

90801—D. Willis—*Toy.*

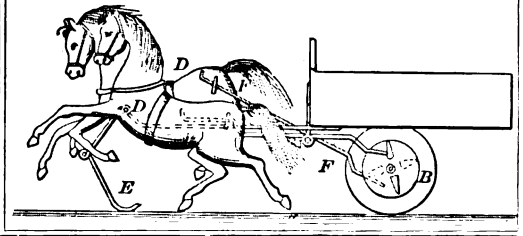

90803—W. L. Yantis—*Switch for Street Cars.*

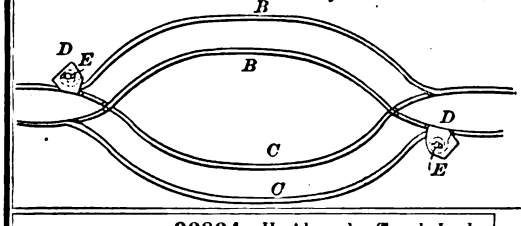

90805—H. Ahrend—*Lock for Pianos, &c.*

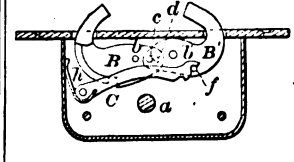

90804—H. Ahrend—*Trunk Lock.*

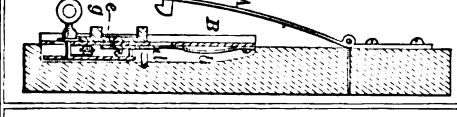

90808—E. S. Atwood—*Tea Kettle Cover.*

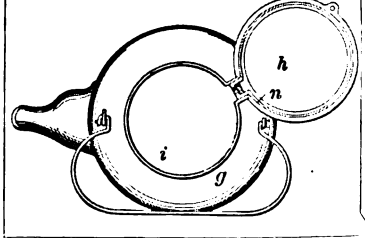

90809—H. Bergstein—*Burglar Alarm.*

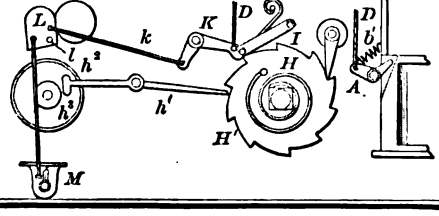

90806—A. Allen—*Fire Alarm Apparatus.*

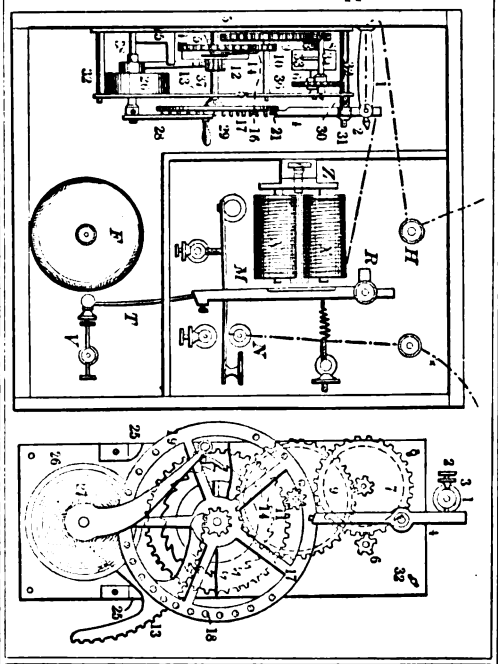

90807—J. F. Appleby—*Grain Binder.*

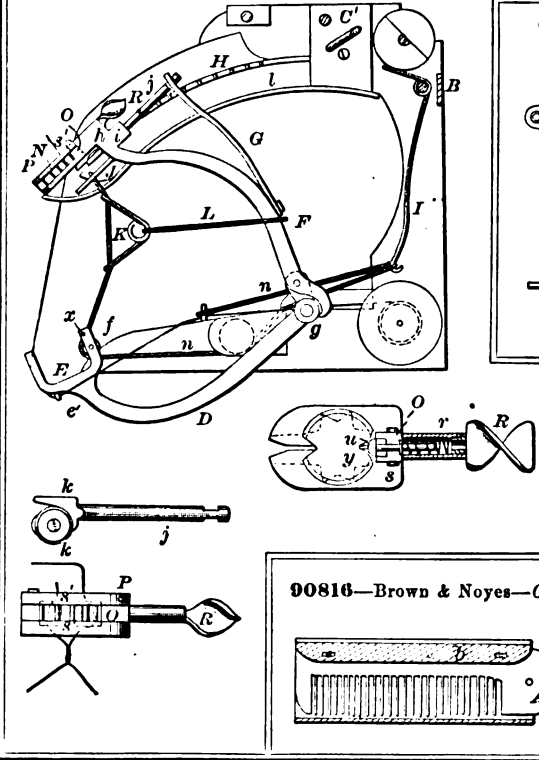

90810—E. H. Bernier—*Hoisting Apparatus.*

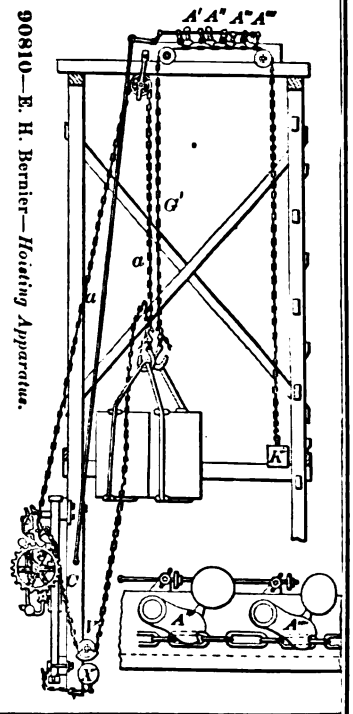

90811—A. G. Bevin—*Bell.*

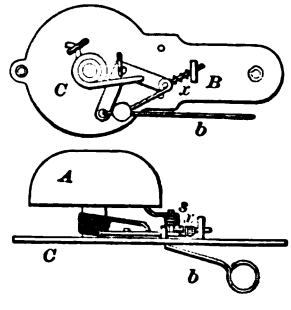

90812—Boon & Mills—*Halter Hitch.*

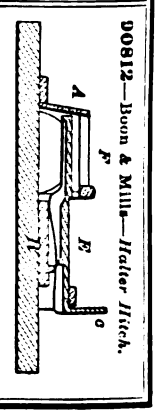

90816—Brown & Noyes—*Comb*

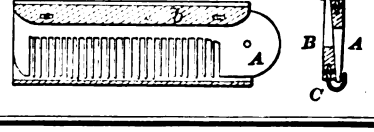

90814—L. W. Broadwell—*Gun Carriage.*

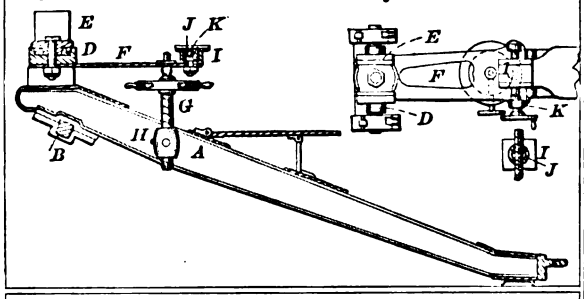

90815—E. Brown—*Pyrometer.*

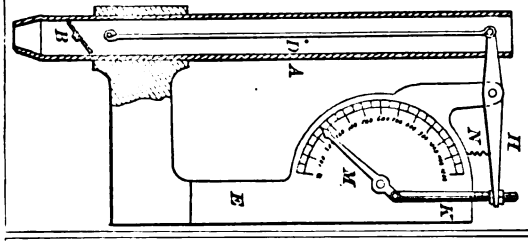

90818—H. P. Burdick—*Hay Rake and Loader.*

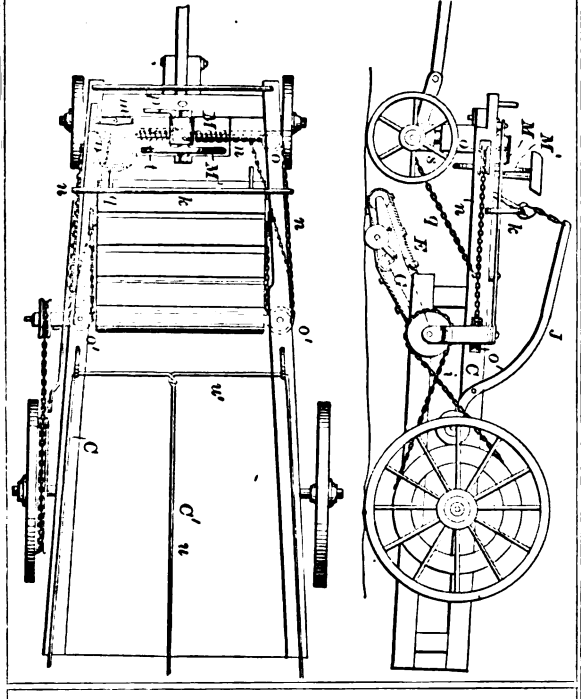

90820—Cooper & Monroe—*Bed Bottom.*

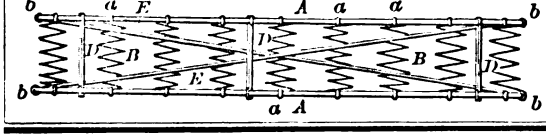

90817—F. Buckelew—*Washing Machine.*

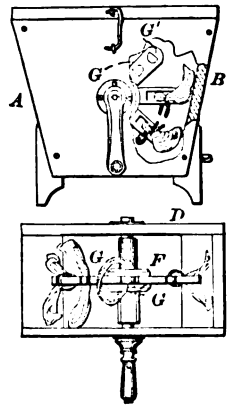

90819—W. J. Cochran—*For Coal Gas.*

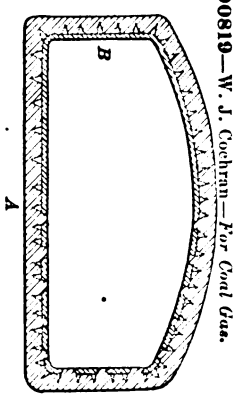

90823—L. Cutting—*Hoisting Apparatus.*

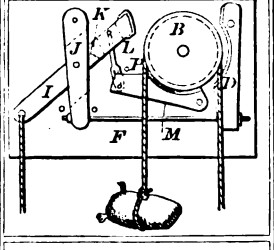

90824—J. Dickinson—*Preparation of Mineral Carbon for the Arts.*

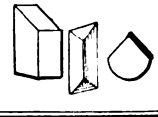

90821—R. P. & E. B. Crane—*Railway Gate.*

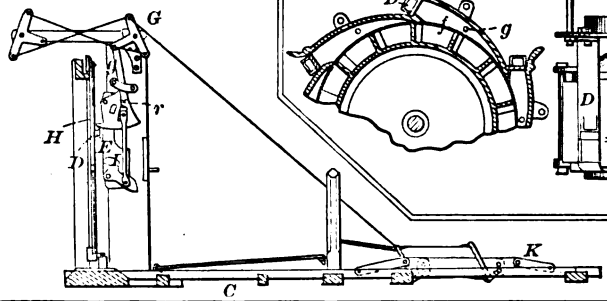

90826—R. Dunbar—*Water Wheel.*

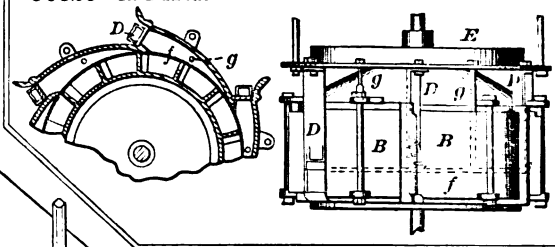

90822—J. T. Crec—*Stone Dressing Machine.*

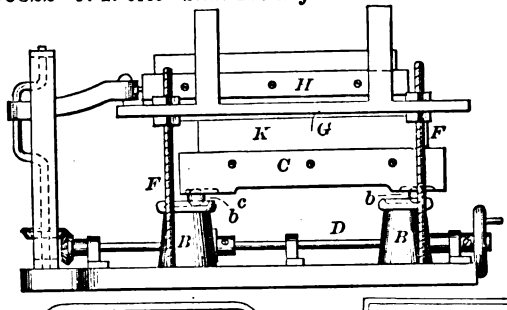

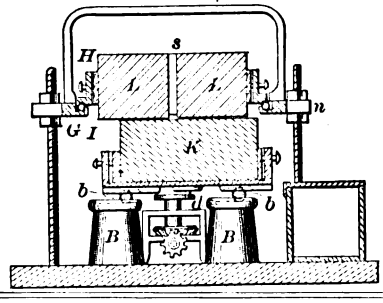

90828—J. A. Eldridge—*Boot Crimper.*

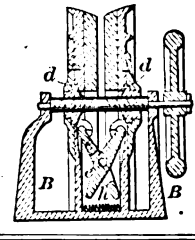

90830—B. D. Evans—*Vapor Burner and Lamp Post.*

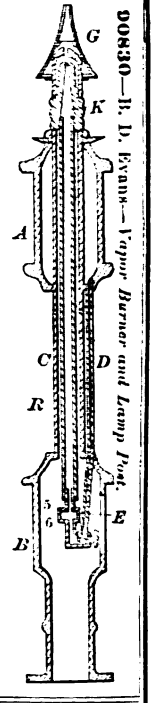

90829—English & Rogers—*Wagon Brake.*

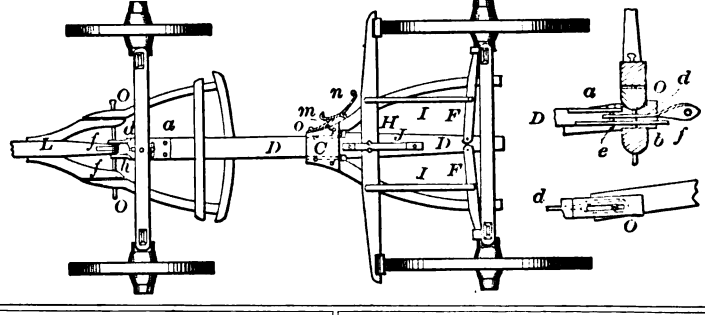

90832—G. F. Fessenden—*Castanets.*

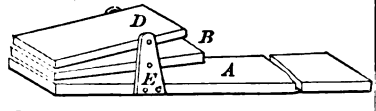

90833—C. D. Flynt—*Life Boat.*

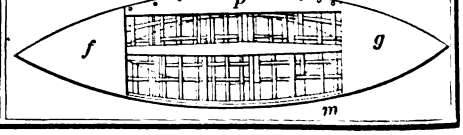

90831—C. A. Fargo—*Gang Plow.*

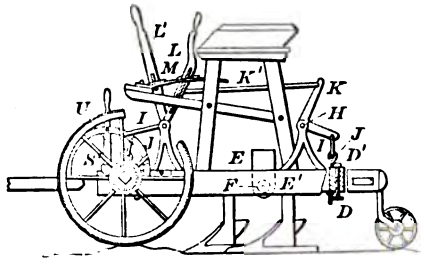

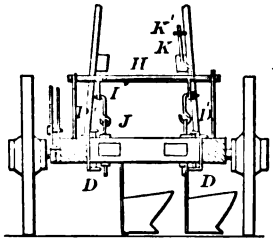

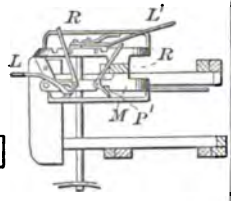

90834—M. R. Fory—*For Felling Trees.*

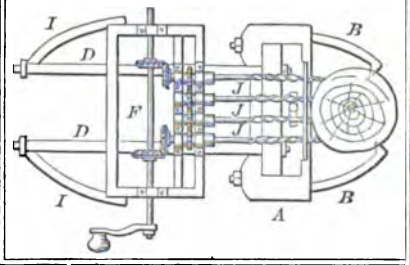

90835—T. F. Frank—*Tea and Coffee Pot.*

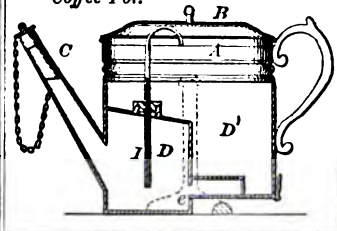

90836—W. L. Gilroy—*Green Corn Fork.*

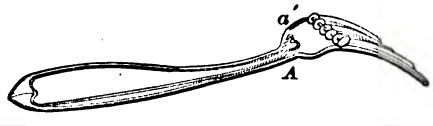

90837—J. Guild—*Velocipede.*

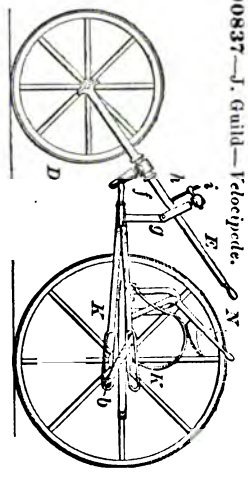

90838—E. J. Hall—*Loom Picker Shoe.*

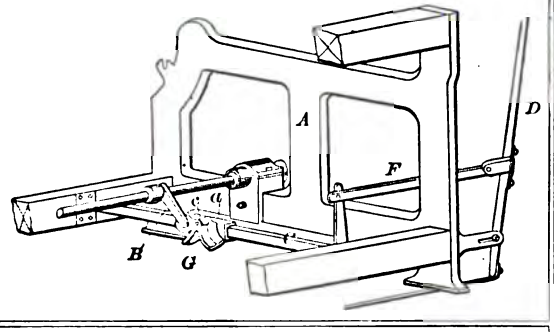

90840—W. Haworth—*Bed Bottom.*

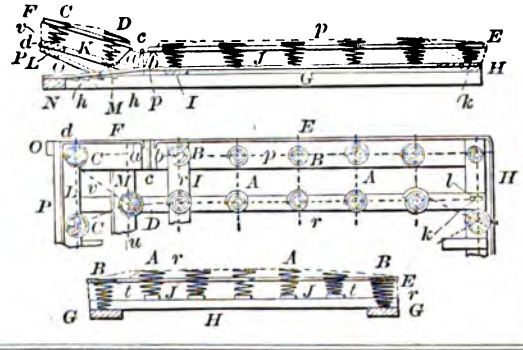

90839—T. F. Hall—*Gate.*

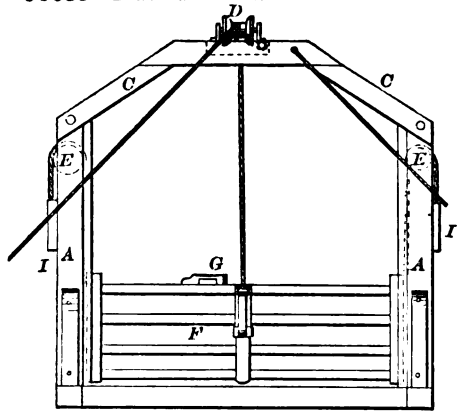

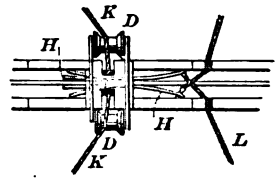

90841—M. Hipp—*Electric Clock.*

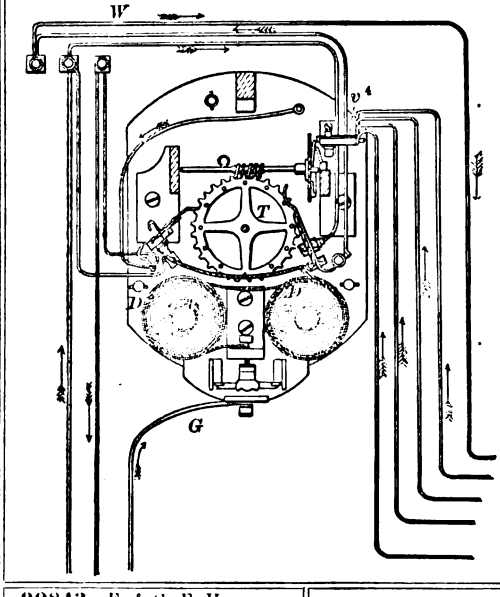

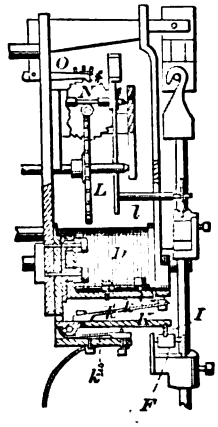

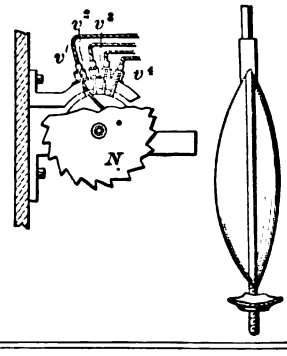

90843—F. & G. F. Hovey—*Cider Mill and Press.*

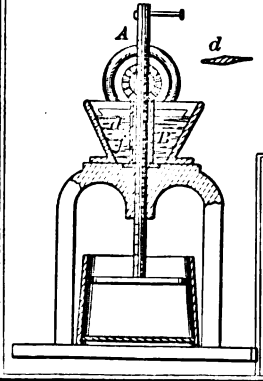

90842—Herrington & Richards—*Scaffold.*

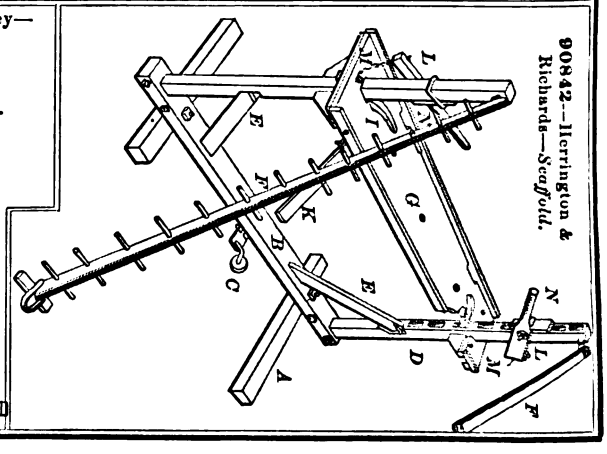

90844—A. Hunter—*Grain Separator.*

Fig. 1

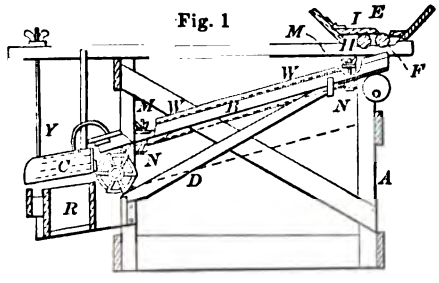

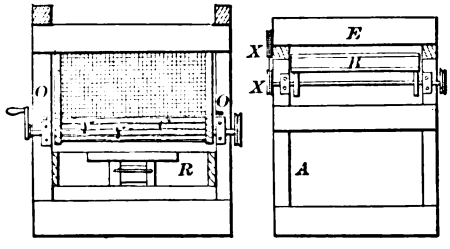

90845—D. N. Hurlbut—*Window Screen.*

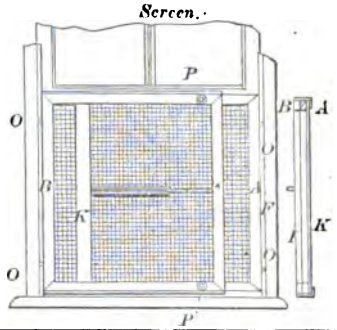

90846—F. A. Jacquet—*Heating and Cooking Apparatus.*

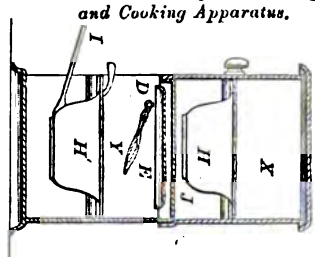

90847—Johnson & Milson—*Grain Dryer.*

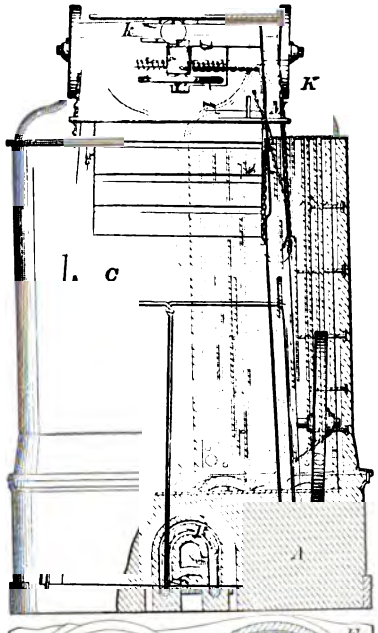

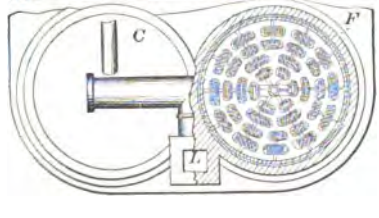

90848—T. W. Johnson—*For Making Extracts from Tan Bark.*

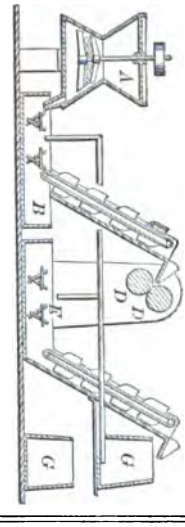

90849—W. V. Kay—*Buckle.*

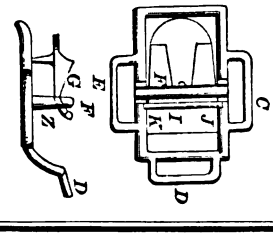

90850—W. J. Keep—*Stove.*

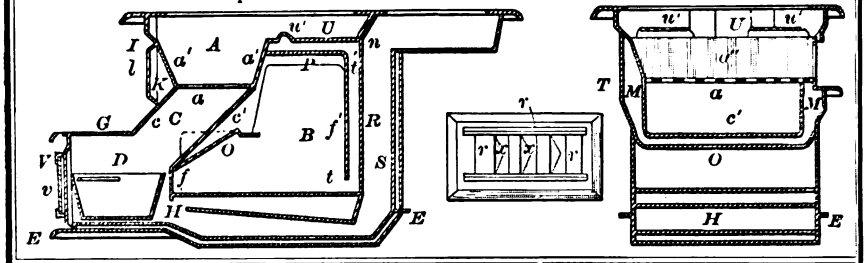

90851—J. S. Kendall—*Stock Car.*

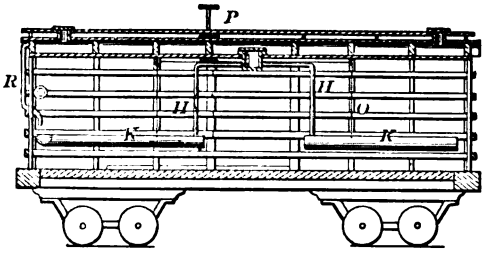

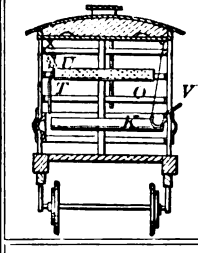

90855—A. Krizek—*Toothpick.*

90853—H. Kimball—*Low Water Indicator.*

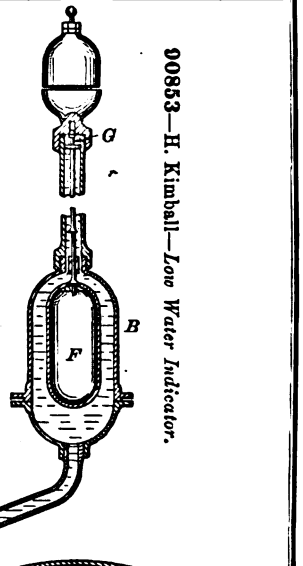

90852—N. Keyser—*Stove.*

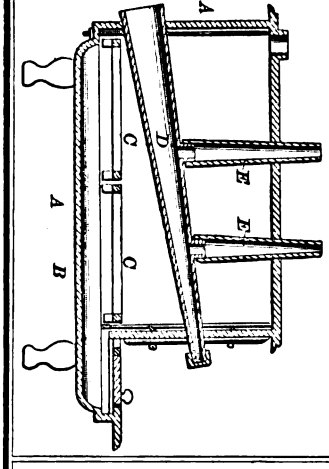

90856—H. Lee—*Stock Car.*

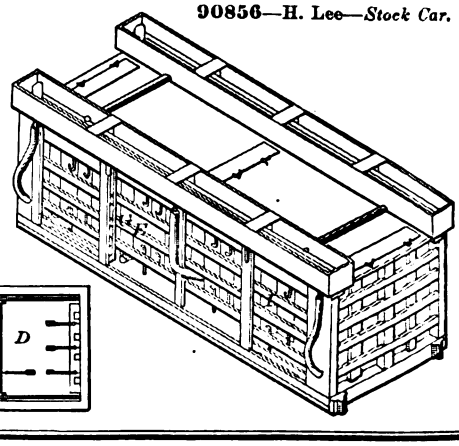

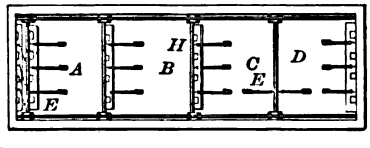

90858—MacDonald & Calverley—*Printing Press.*

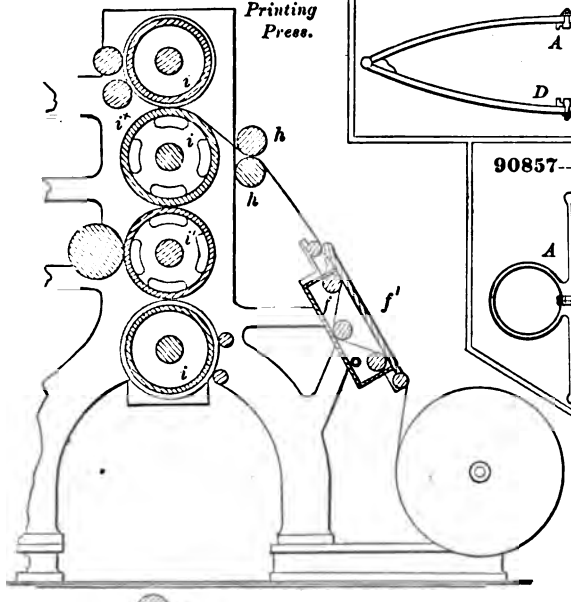

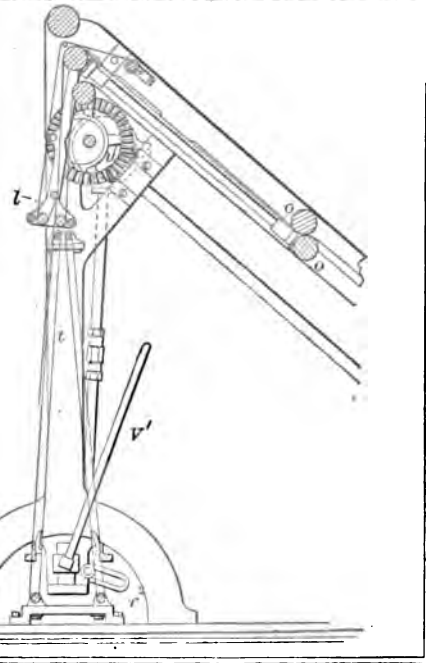

90861—E. P. McCarthy—*Wagon Spring.*

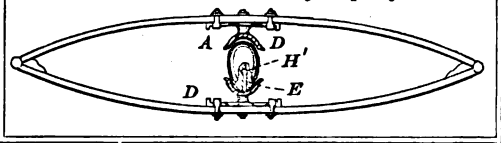

90857—J. Letchworth—*Bridle Bit.*

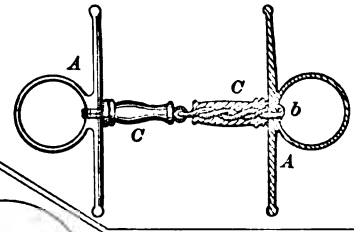

90859—Maclean & Harris—*Buckle.*

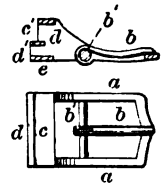

90860—H. C. March—*Stove.*

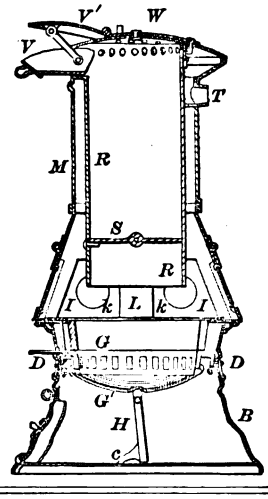

90862—F. H. Merrill—*Stove Pipe Collar.*

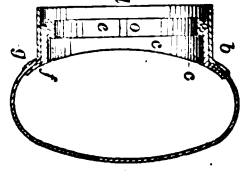

90863—Merrill & Carleton—*Lamp Burner.*

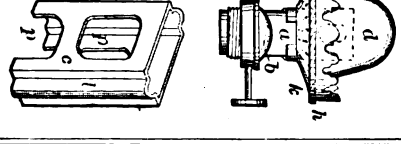

90864—J. F. Milligan—*Door Lock.*

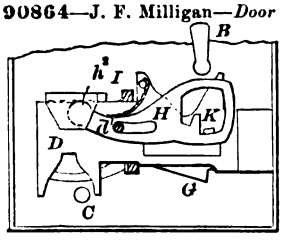

90865—Moore & Aylwerd—*For Holding Horses.*

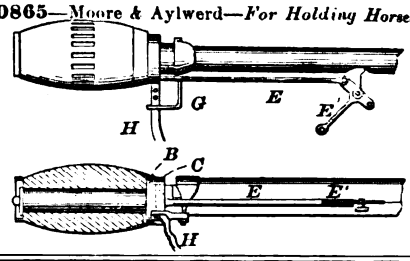

90866—D. W. Onderdonk—*Thill Coupling.*

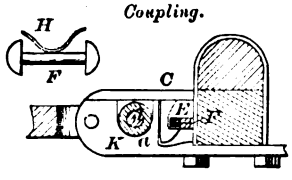

90867—G. Palmer—*Nut Lock.*

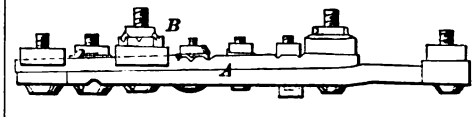

90869—J. F. Piper—*Velocipede.*

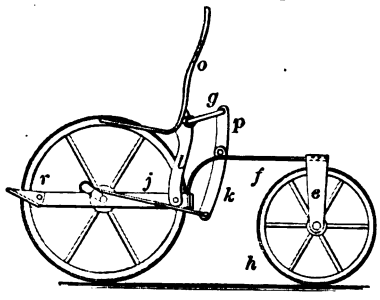

90870—W. S. Poulson—*Book Holder.*

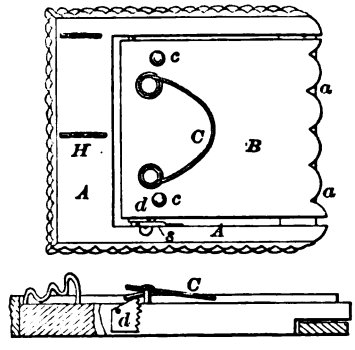

90868—E. Pierce—*Bomb Lance.*

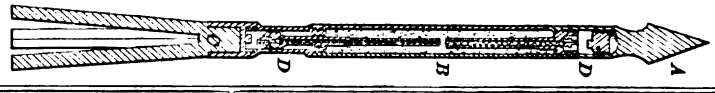

90871—T. J. Power—*Priming Metallic Cartridges.*

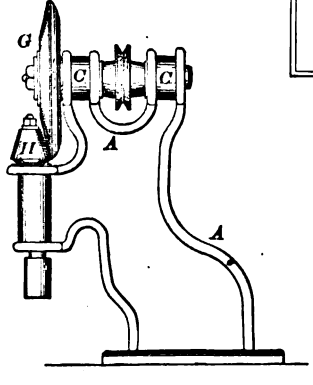

90872—J. Robertson—*Lead Pipe Machine.*

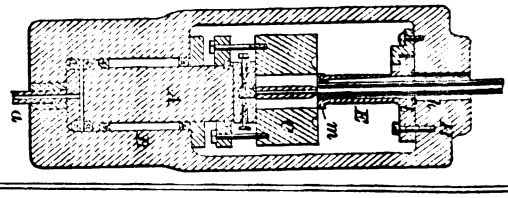

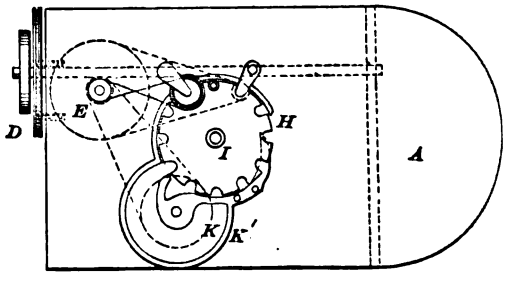

90873—J. M. Robnett—*Beehive.*

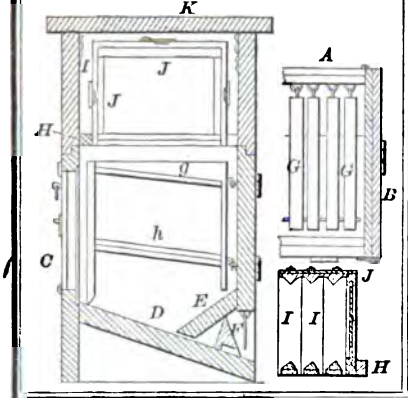

90874—T. Rowe—*Safety Valve.*

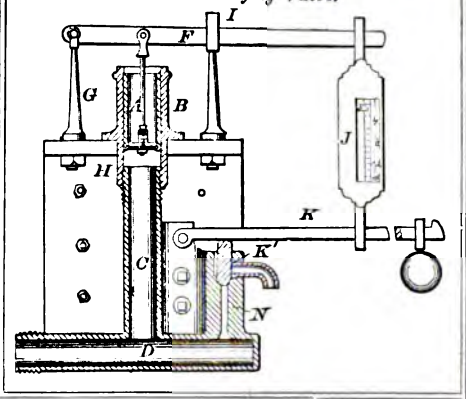

90875—M. R. Ruble—*Smut Machine.*

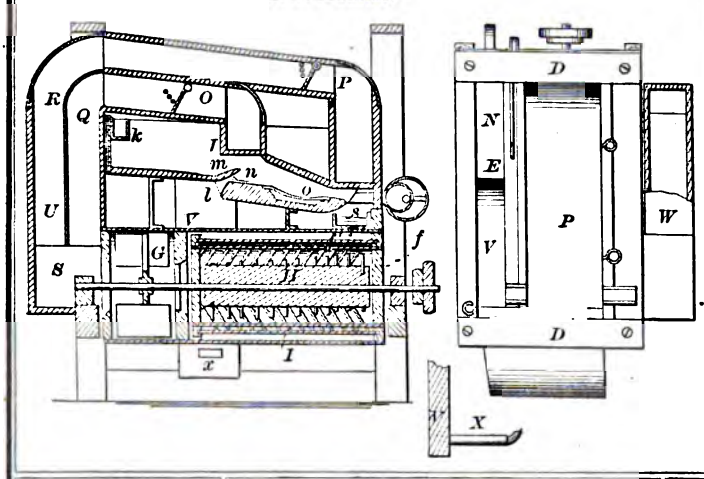

90878—A. V. Sargeant—*Buckle.*

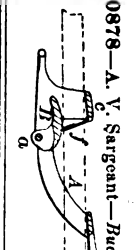

90876—T. Rüdiger—*Belt Coupling.*

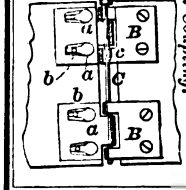

90877—Salom & Field—*For Clipping the Hair from Horses, &c.*

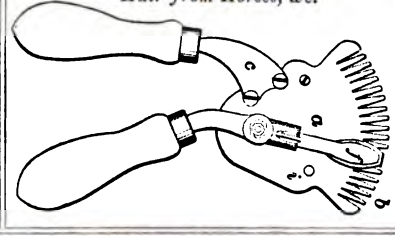

90880—A. P. Seymour—*Hinge.*

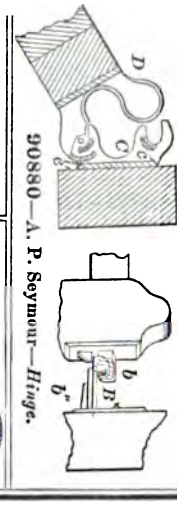

90879—Scranton & Parsons—*Dental Plugging Instrument.*

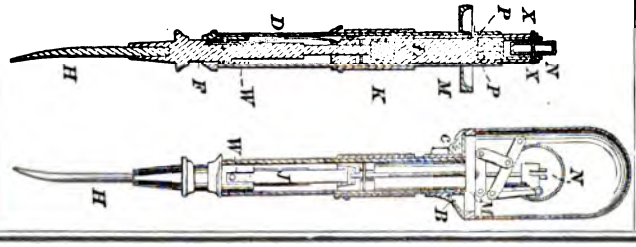

90881—L. T. Simon—*Clothes Pin.*

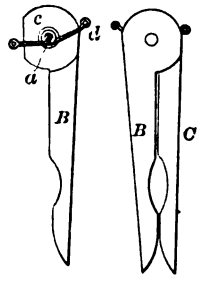

90882—J. Simpson—*Churn.*

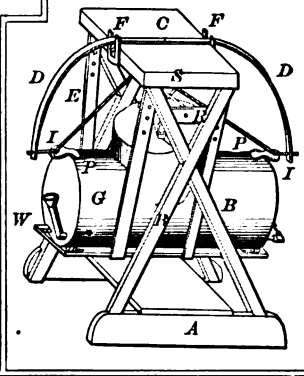

90883—O. M. Smith—

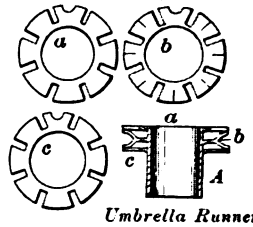

Umbrella Runner.

90884—W. G. Snook—*Steam Engine Piston.*

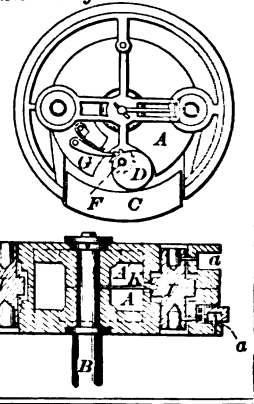

90886—E. G. Starck—*Alcohol Still.*

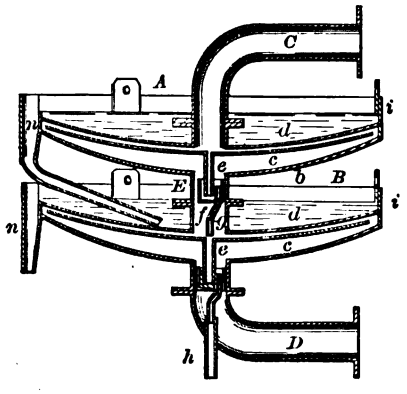

90885—G. S. Stanard—*Stove.*

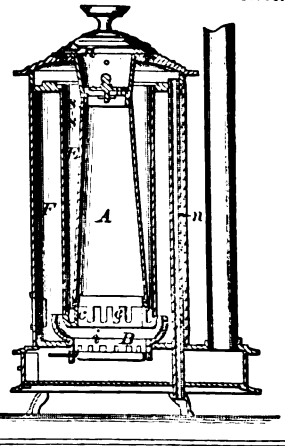

90890—W. Trump—*Wagon Pole Attachment.*

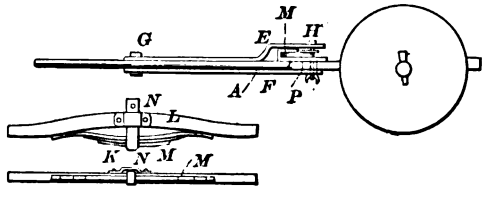

90887—J. D. Stewart—*Slide Valve.*

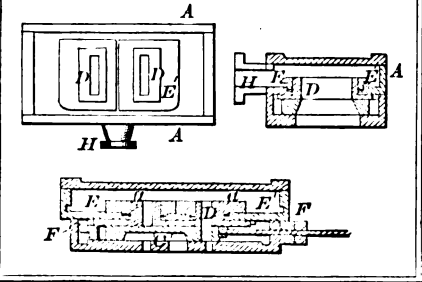

90888—A. Stockwell—*Loom.*

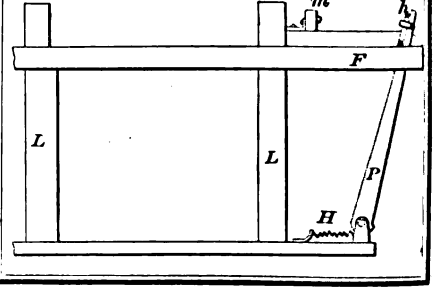

90873—J. M. Robnett—*Beehive.*

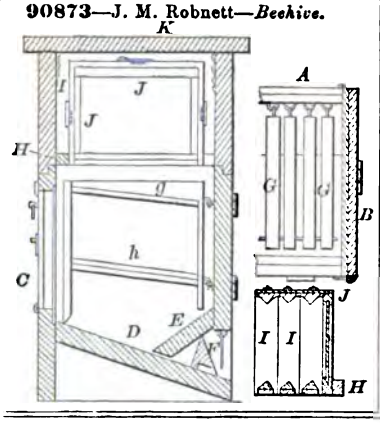

90874—T. Rowe—*Safety Valve.*

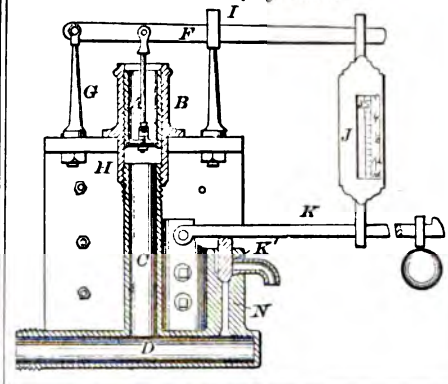

90875—M. R. Ruble—*Smut Machine.*

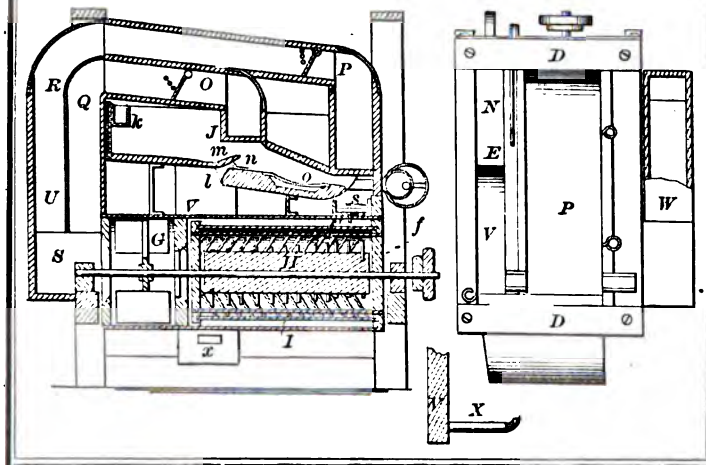

90878—A. V. Sargeant—*Buckle.*

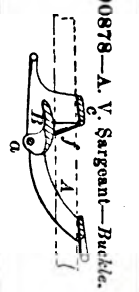

90876—T. Rüdiger—*Belt Coupling.*

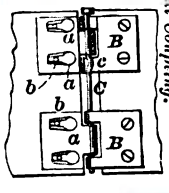

90877—Salom & Field—*For Clipping the Hair from Horses, &c.*

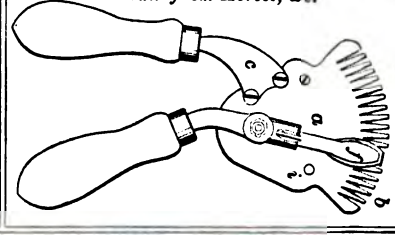

90880—A. P. Seymour—*Hinge.*

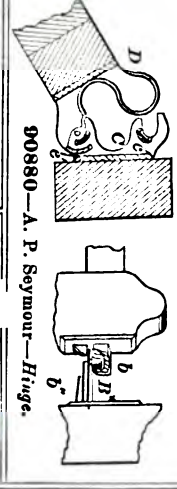

90879—Scranton & Parsons—*Dental Plugging Instrument.*

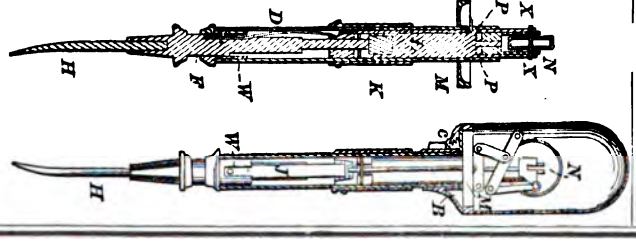

90881—L. T. Simon—*Clothes Pin.*

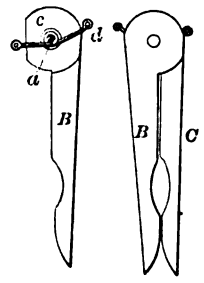

90882—J. Simpson—*Churn.*

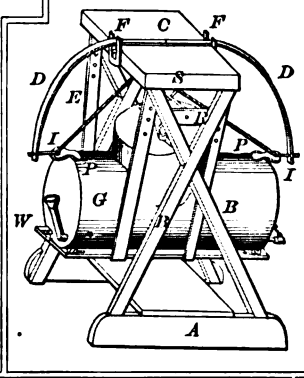

90883—O. M. Smith—

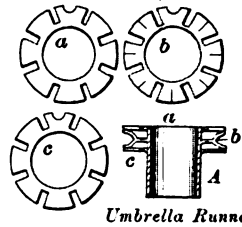

Umbrella Runner.

90884—W. G. Snook—*Steam Engine Piston.*

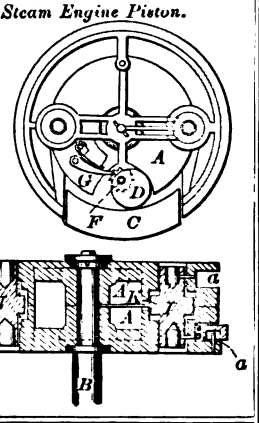

90886—E. G. Starck—*Alcohol Still.*

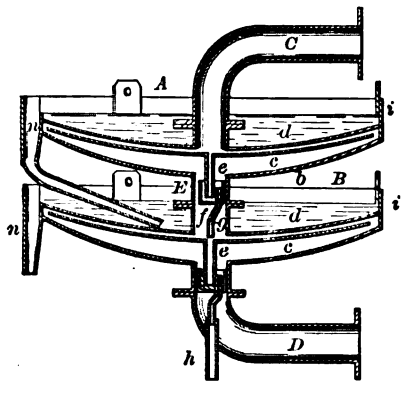

90885—G. S. Stanard—*Stove.*

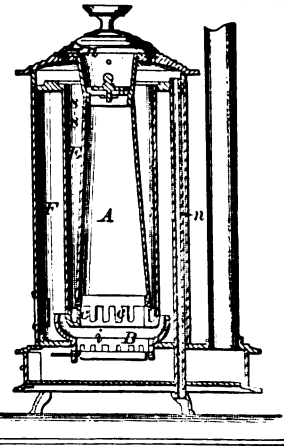

90890—W. Trump—*Wagon Pole Attachment.*

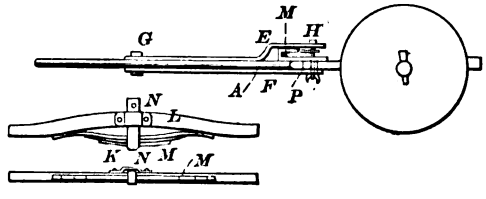

90887—J. D. Stewart—*Slide Valve.*

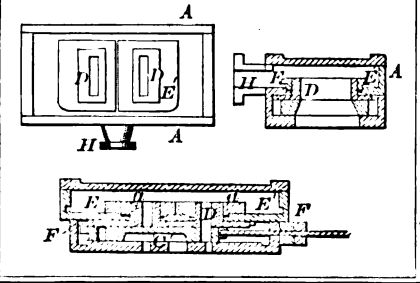

90888—A. Stockwell—*Loom.*

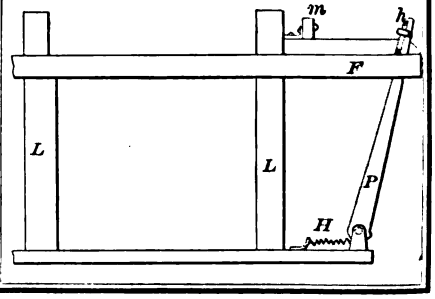

90911—M. Adams—*Seed Planter.*

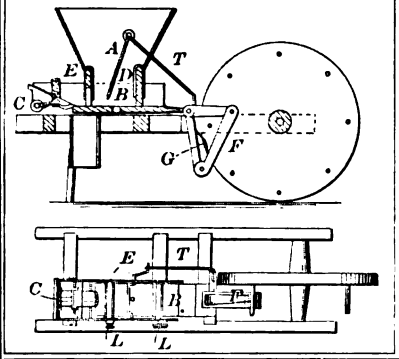

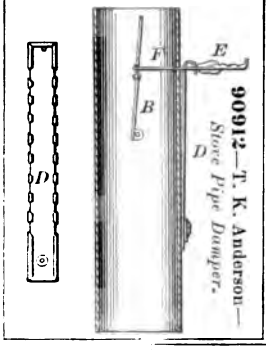

90912—T. K. Anderson—*Stove Pipe Damper.*

90913—H. G. Arnold—*Sash Lock.*

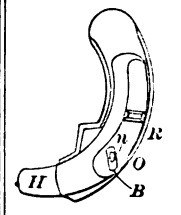

90914—J. H. Baird—*Punching Press Conveyor.*

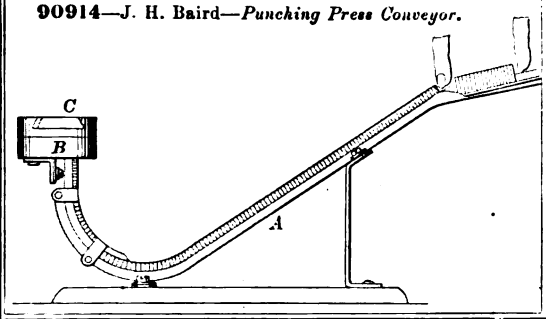

90915—F. E. Barr—*Three Horse Equalizer.*

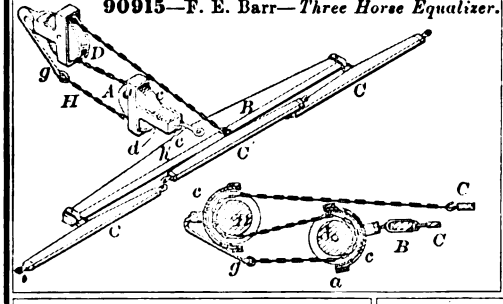

90916—W. Barry—*Measuring Can for Liquids.*

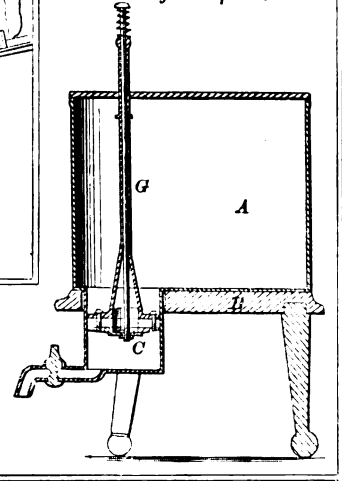

90917—R. Briggs—*Connections of Gas Purifiers.*

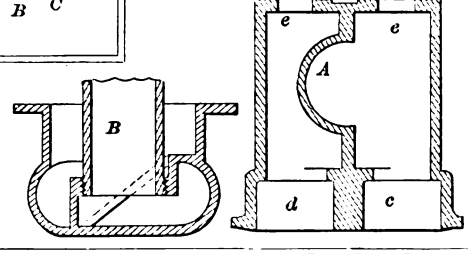

90918—Briggs & Muntzinger—*Centre Valve of Gas Works.*

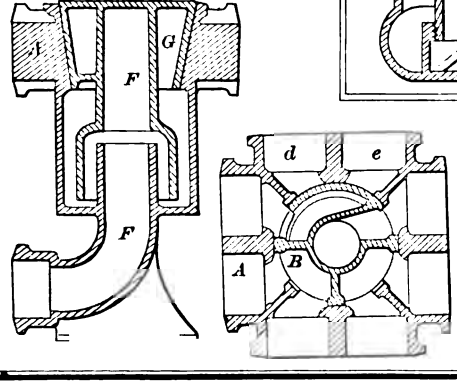

90919—E. Broad—*Attaching Augers to Handles.*

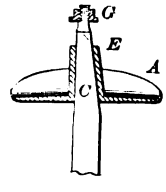

90920—J. W. Brooks—*Corset Skirt Supporter.*

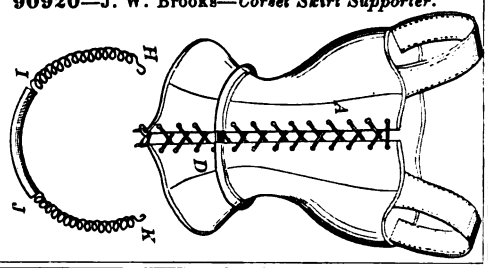

90921—J. Bryan—*For Plowing and Breaking up Ground.*

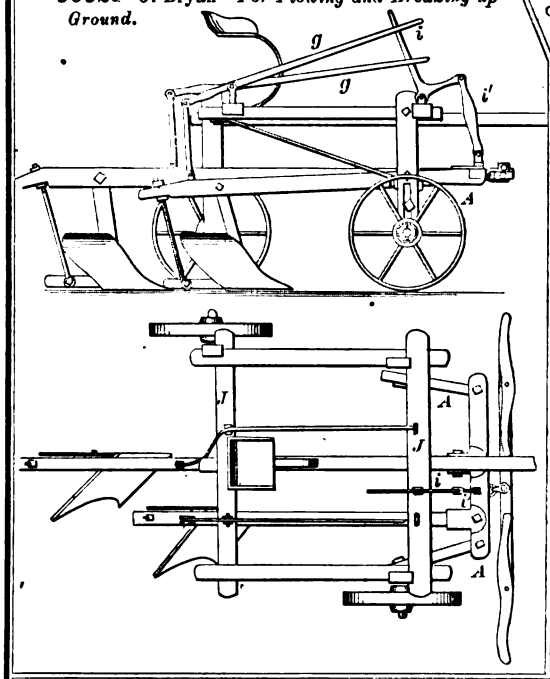

90922—A. Carter—*Curtain Fixture.*

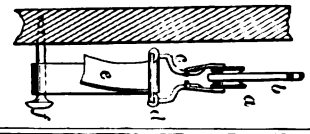

90923—B. Carter—*Bosom Pad.*

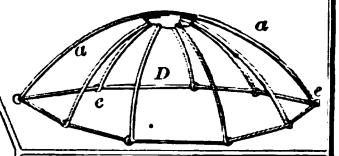

90929—S. H. Clapp—*Brick and Tile Kiln.*

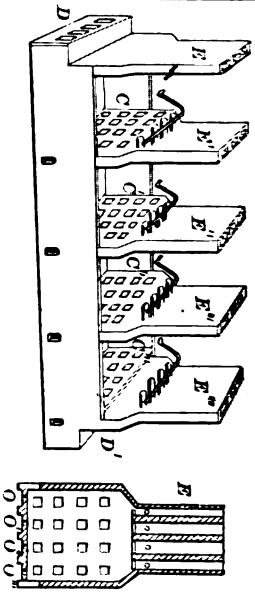

90930—H. Coll—*Steam Operated Water Ejector.*

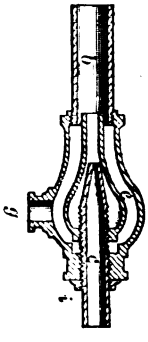

90924—T. J. Chubb—*Furnace for Making Iron and Steel.*

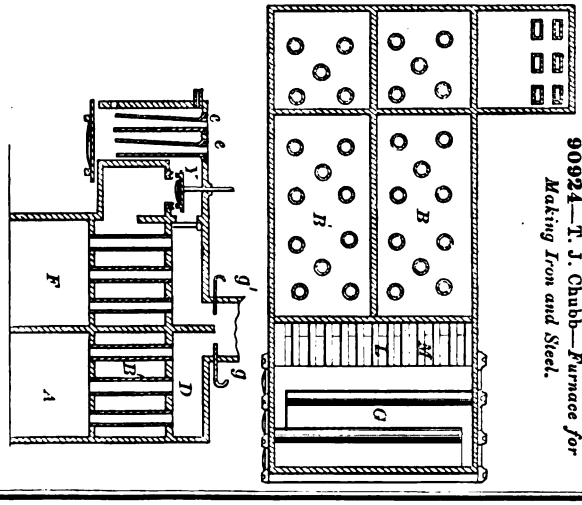

90931—E. Cowles—*For Cutting Cards.*

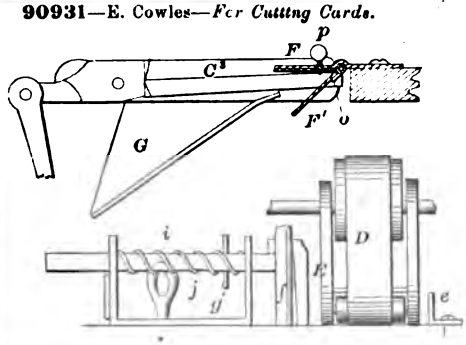

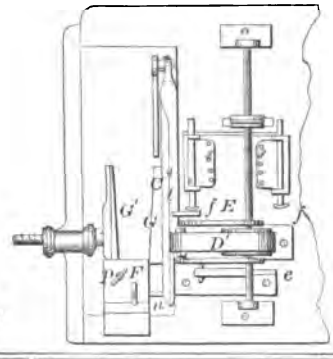

90932—J. J. Crowley—*Grain Separator and Mixer.*

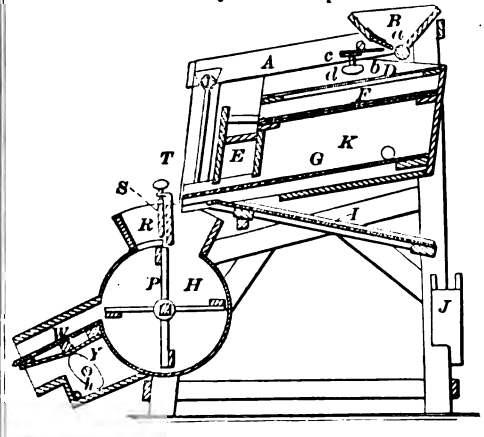

90933—E. M. Davis—*Rolling Apparatus.*

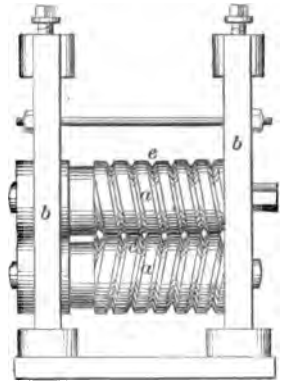

90935—Dewar, Smith & Brashear—*Pump Rod Coupling.*

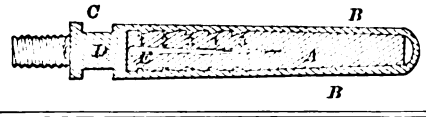

90934—R. E. Deane—*Draught Regulator for Heating Apparatus.*

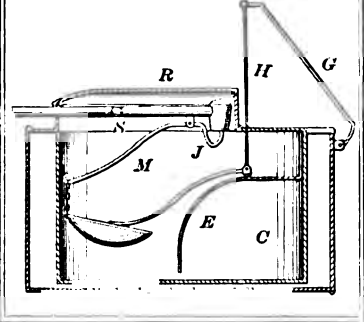

90936—E. P. Dickey—*Fanning Mill.*

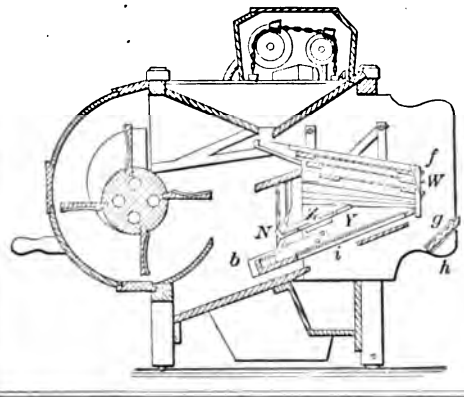

Fig 6

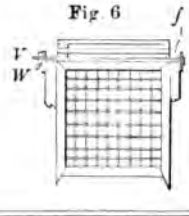

90937—J. Duff—*Hanger for Shafting.*

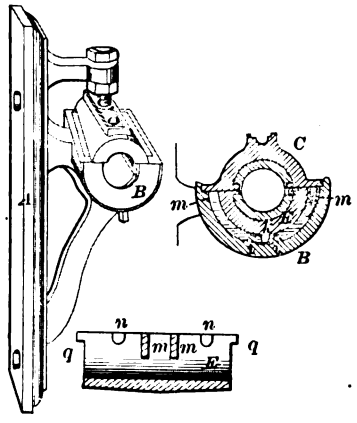

90938—J. Eck—*Tug Hook.*

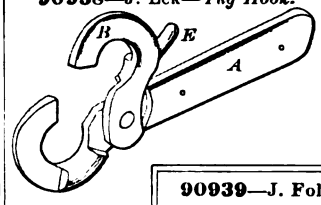

90939—J. Foltz—*Harrow.*

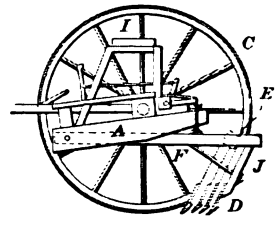

90940—I. N. Forrester—*Pump.*

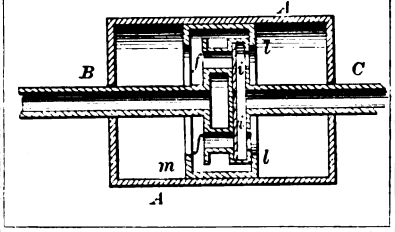

90941—C. T. Frost—*Bedstead, Seat, &c.*

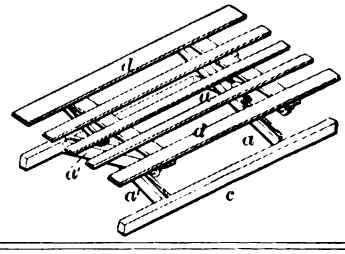

90942—G. M. Granger—*Wash Boiler.*

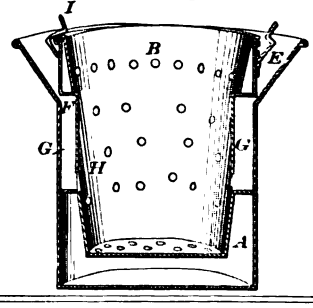

90943—F. L. Hagadorn—*Pinking Machine.*

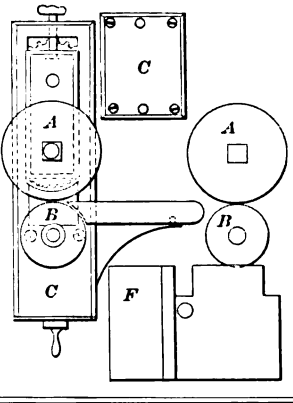

90945—J. E. Hills—*Key Fastener.*

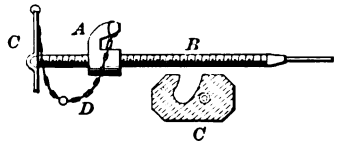

90946—M. Jerome—*For Scutching and Threshing Flax.*

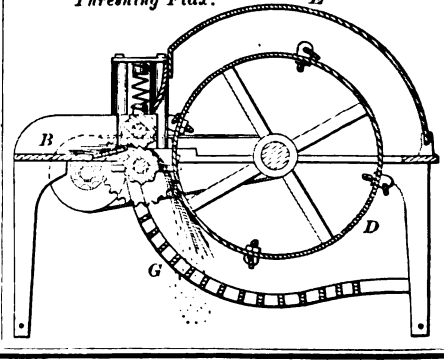

90947—E. A. Jones—*Velocipede.*

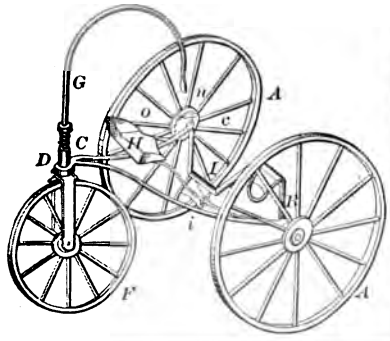

90948—J. G. Kenyon—*Stud.*

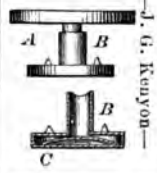

90949—T. T. Kinsey—*Lightning Rod.*

90950—H. E. Marchand—*Corset.*

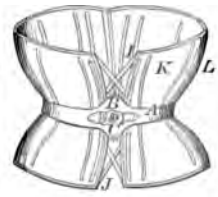

90951—J. V. Meigs—*Cartridge.*

90952—J. E. Murray—*Shifting Cleat or Ring Bolt, &c.*

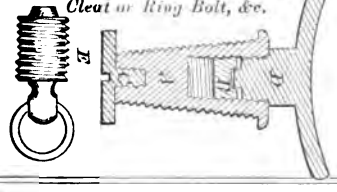

90953—J. J. Naylor—*Seeder and Fertilizer.*

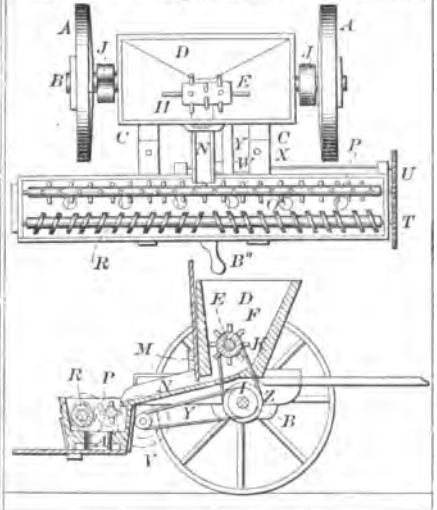

90954—Neale & Beck—*Sewing Machine.*

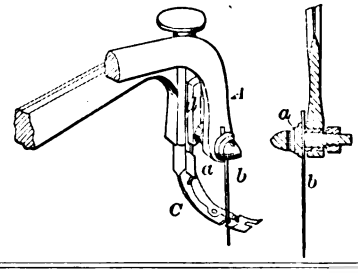

90955—A. F. W. Partz—*For Collecting Gold and Silver from Ores.*

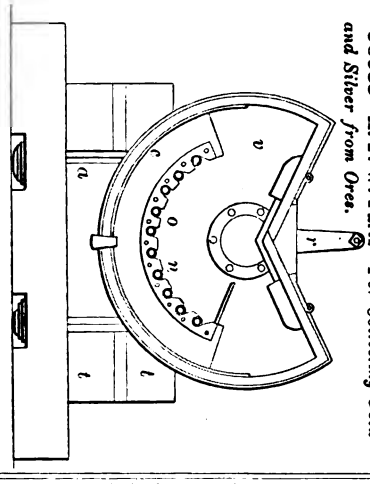

90956—H. L. Pierce—*Ring for Spinning Machines.*

90957—D. S. Quimby, Jr.—*Fireplace Heater.*

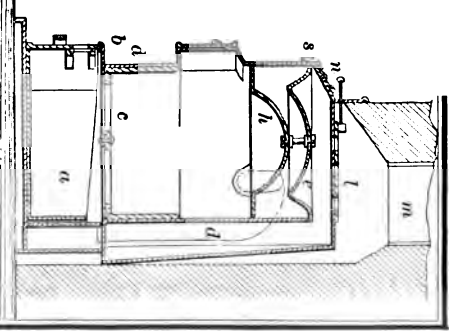

90958—G. Richardson—*Step for Shafts.*

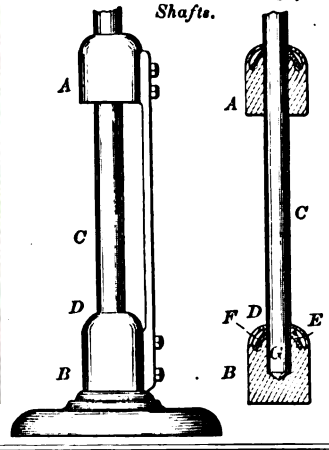

90960—E. Root—*Mitre Box.*

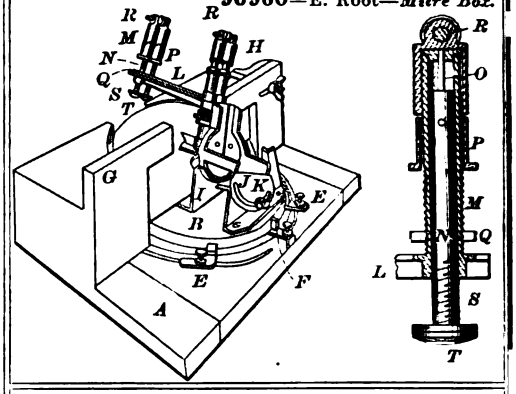

90959—W. Richardson—*For Turning Saw Logs.*

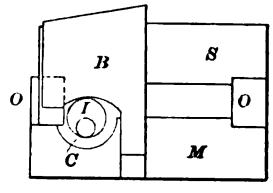

90961—R. Sandiford—*Land Roller, Marker and Harrow.*

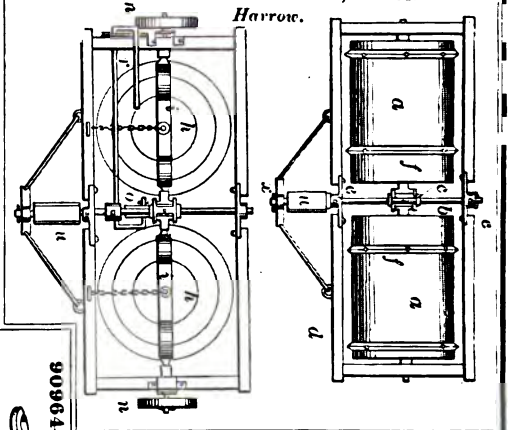

90963—W. Seybold—*Miners' Lamp.*

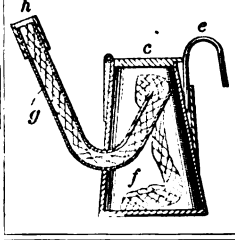

90964—W. W. Sly—*Snap Hook.*

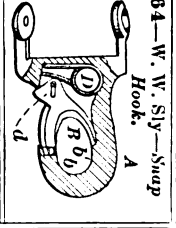

90965—O. Smith—*Buggy Top Bow Setter.*

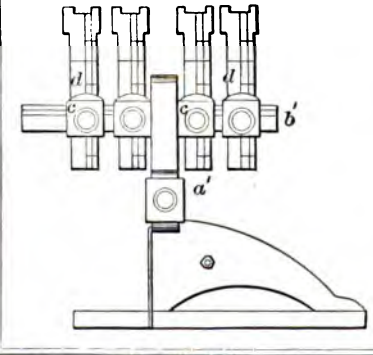

90966—H. Soggs—*Ironing Table.*

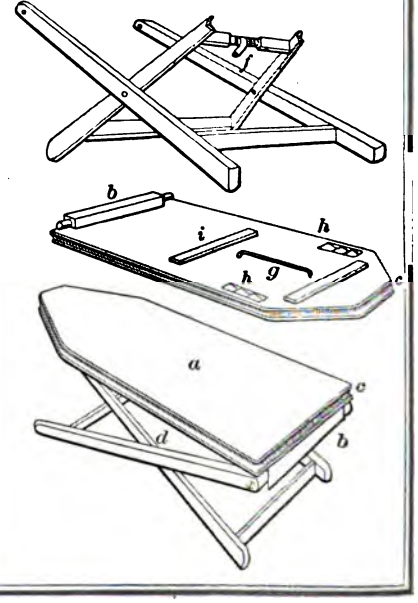

90967—J. S. Sommerville—*Miners' Lamp.*

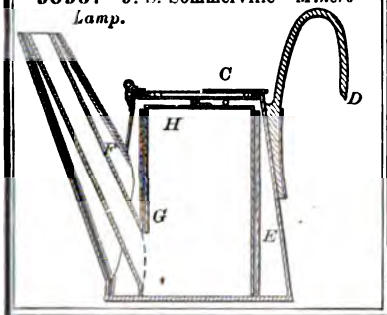

90968—T. Spurrier—*Carriage Axle.*

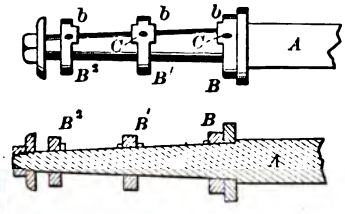

90969—T. H. Stevens—*Stone Sawing Machine.*

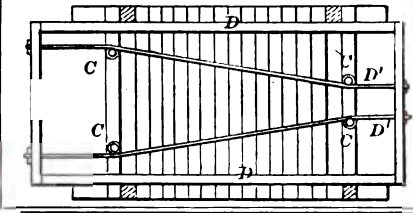

90970—E. Thomas—*Hay and Cotton Press.*

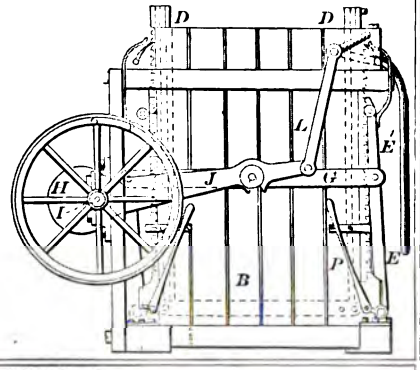

90971—C. W. Todd—*Gate.*

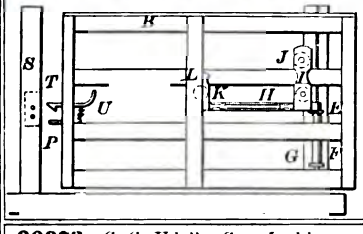

90972—W. Tucker—*Saw Filing Machine.*

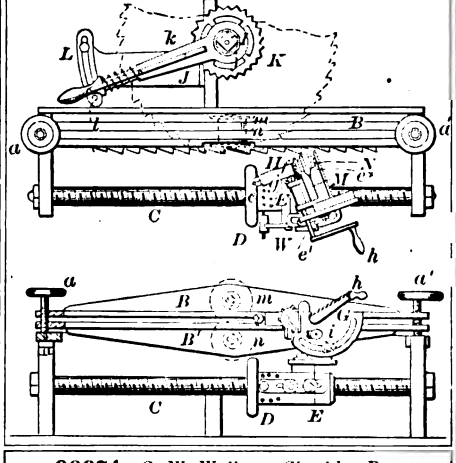

90973—C. G. Udell—*Step Ladder.*

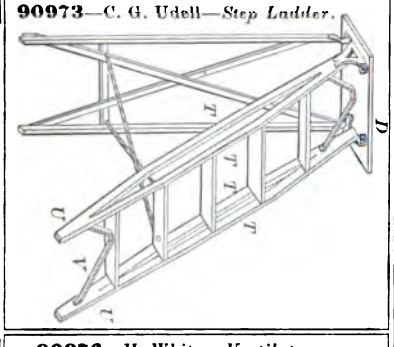

90974—G. W. Walker—*Shoulder Brace.*

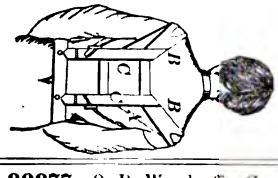

90976—H. White—*Ventilator.*

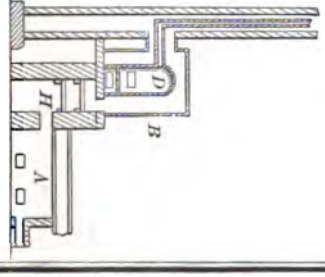

90977—O. D. Woodruff—*Car Coupling.*

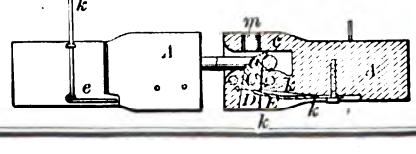

90958—G. Richardson—*Step for Shafts.*

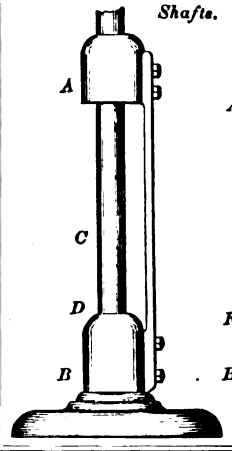

90959—W. Richardson—*For Turning Saw Logs.*

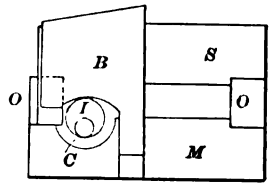

90960—E. Root—*Mitre Box.*

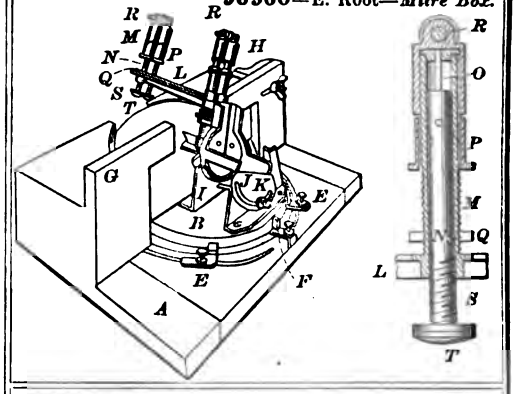

90961—R. Sandiford—*Land Roller, Marker and Harrow.*

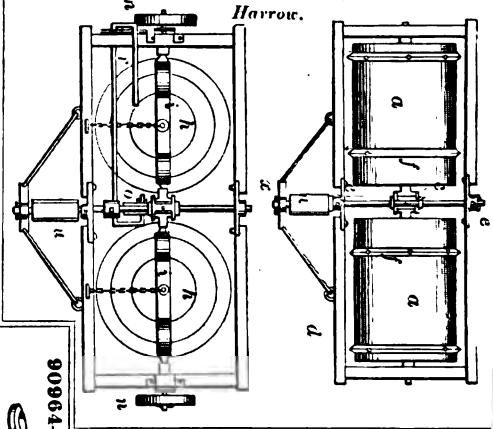

90963—W. Seybold—*Miners' Lamp.*

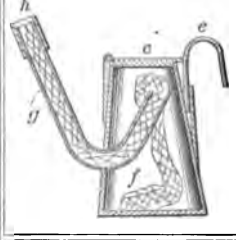

90964—W. W. Sly—*Snap Hook.*

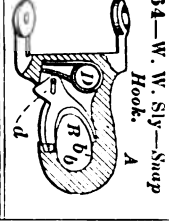

90965—O. Smith—*Buggy Top Bow Setter.*

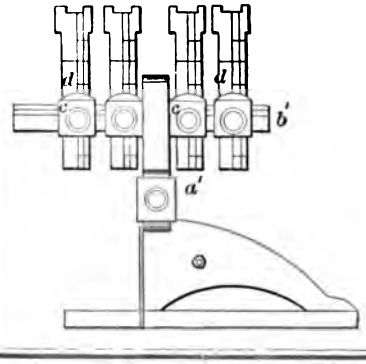

90966—H. Soggs—*Ironing Table.*

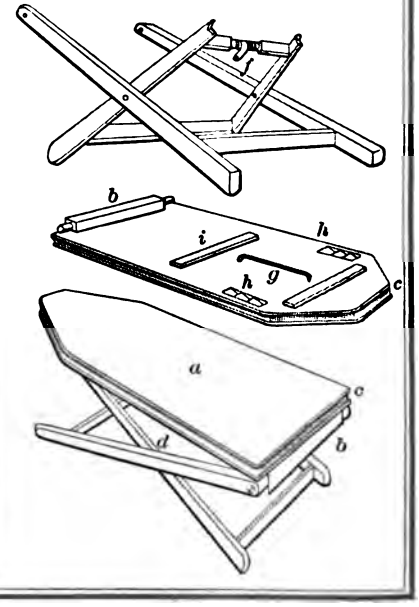

90983—O. B. Bartlett—*Stove Cover.*

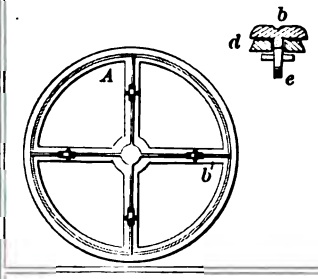

90985—Berg & Stephan—*Baby Jumper.*

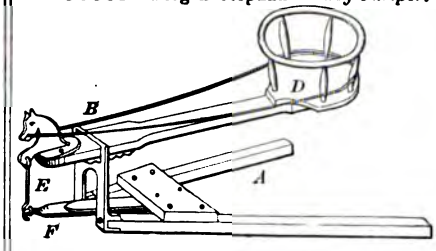

90986—W. M. Bleakley—*Stall Floor.*

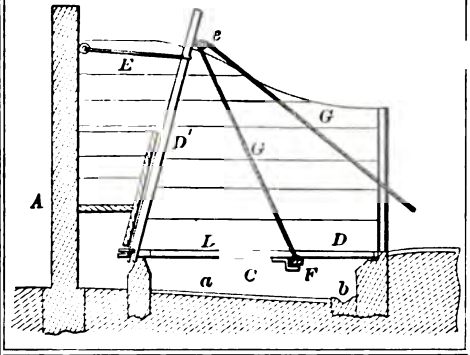

90984—J. H. Bassler—*Beehive.*

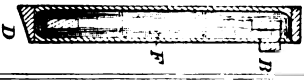

90987—Borden & Power—*Soldering Furnace.*

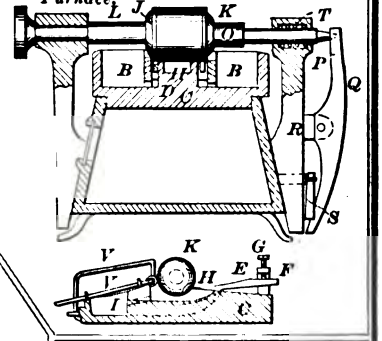

90988—C. Bourgeois—*Steam and Vacuum Gauge.*

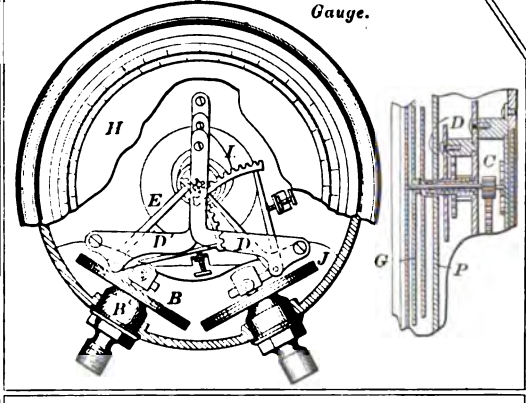

90989—D. J. Brady—*Whiffletree Coupling.*

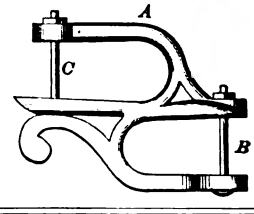

90990—J. R. Bragg—*Spring Saddle Tree.*

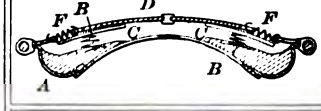

90993—C. F. Carman—*Carriage Wheel.*

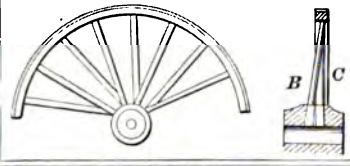

90991—Burt & Hildreth—*Fork for Hay Spreaders.*

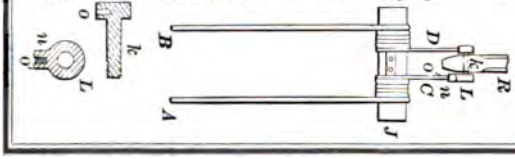

90992—C. W. Cardot—*Friction Clutch.*

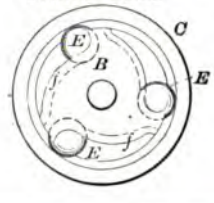

90994—P. Clareton—*Meat Chopper*

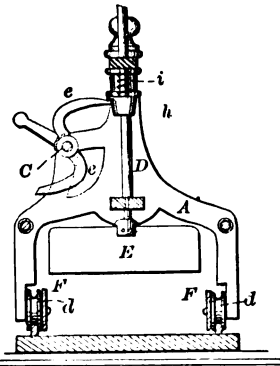

90995—L. C. Clark—*Tea Pot Handle.*

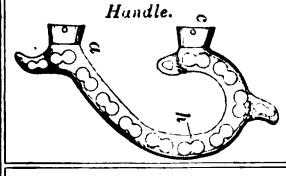

91002—F. E. A. Engelman—*Seed Planter.*

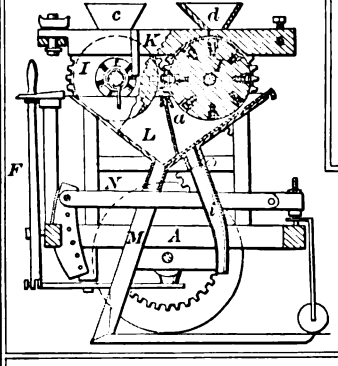

91003—F. Fanning—*Corn Sheller.*

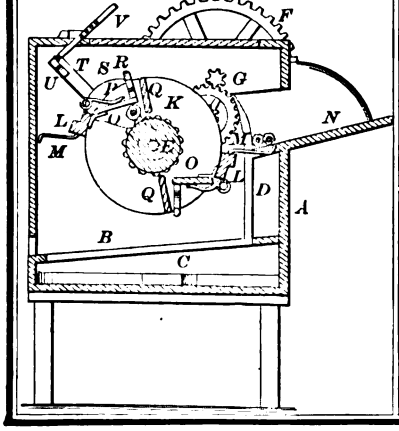

90996—W. R. Clark—*Let-off Mechanism for Looms.*

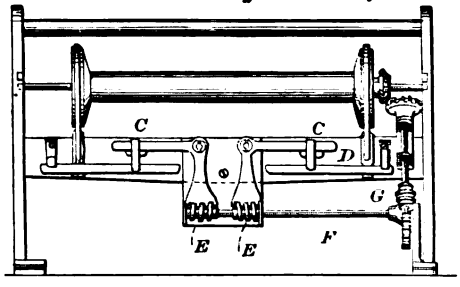

90997—S. C. Currie—*Pocket Book.*

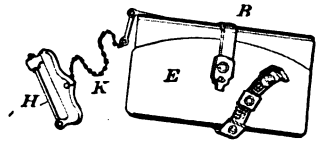

90998—R. D'Heureuse—*Cord Holder for Picture Frames, &c.*

90999—S. Dunlap—*Bed Bottom.*

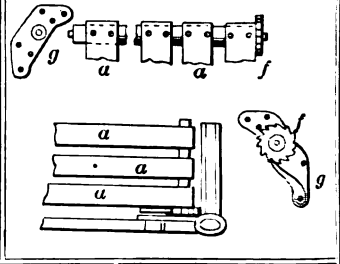

91000—P. S. Devlan—*Lubricating Cushion for Journals.*

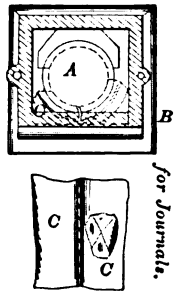

91001—W. H. Elliot—*Hay Spreader.*

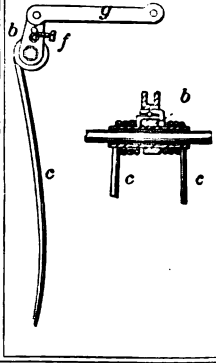

91004—E. A. Fisher—*Bag Holder.*

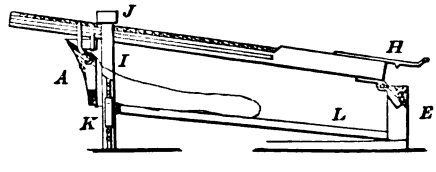

91005—A. Ford—*Corn Harvester.*

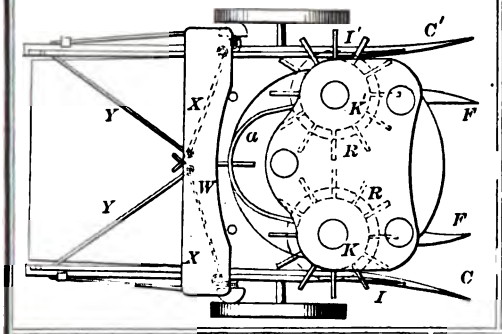

91006—E. P. Ford—*Weather Strip.*

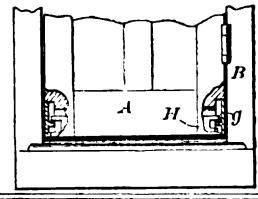

91008—S. Fulton—*Manufacture of Cores.*

91009—D. A. T. Gale—*Nut and Coffee Roaster.*

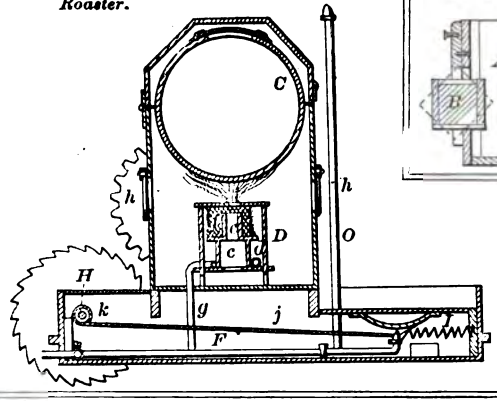

91013—J. Hawse—*Feed Box.*

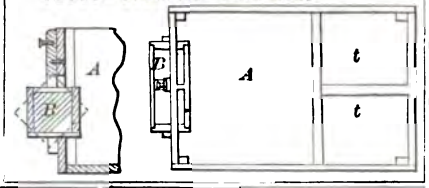

91007—W. B. Fowler—*Packing in Cylinders for Drying Paper.*

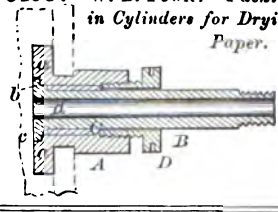

91010—J. Gates—*Piston Packing.*

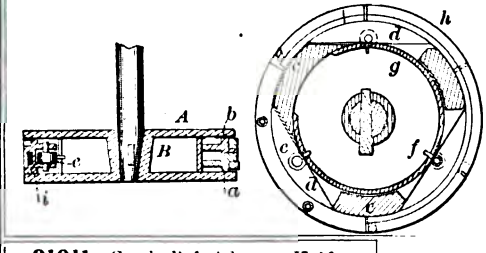

91012—H. Havekorst—*Toilet and Nursery Table.*

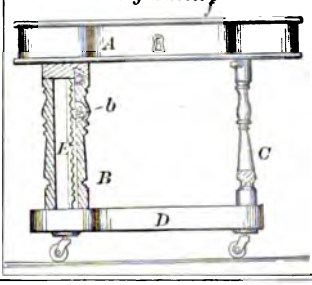

91011—Goodsell & Adams—*Knife Scourer.*

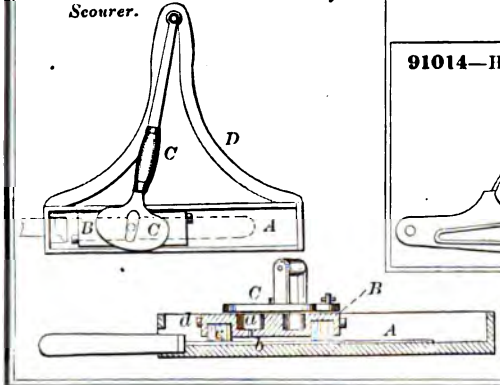

91014—Hay & Hill—*Gun Lock.*

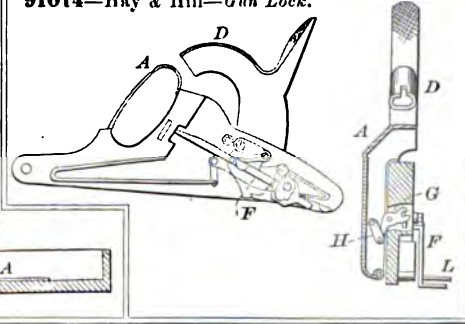

91015—B. W. Healey—*Centre Bearing for Locomotives.*

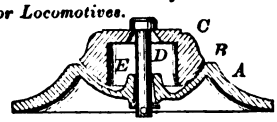

91016—E. Hitchcock—*Churn.*

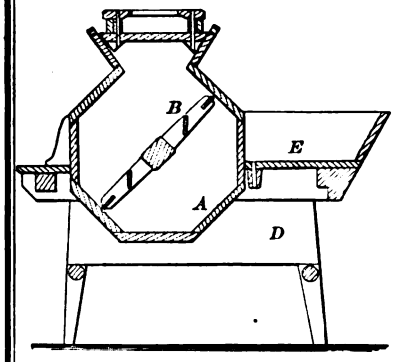

91018—Holske & Babbitt—*Velocipede.*

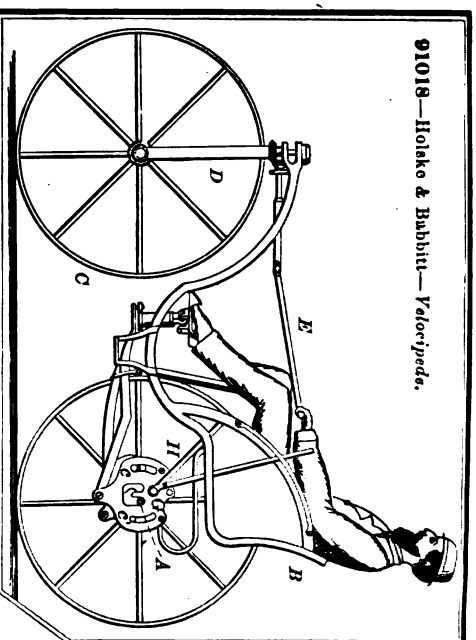

91017—J. B. Holmes—*Water Wheel.*

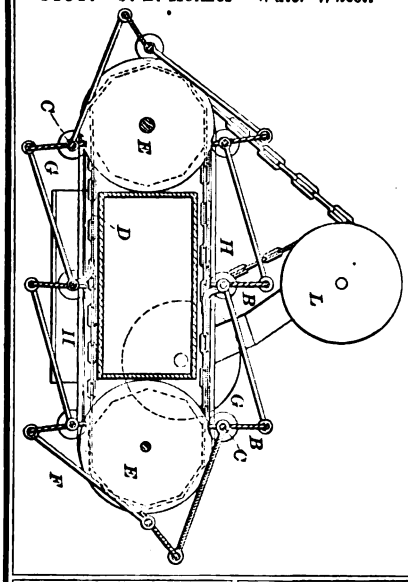

91019—B. W. Hopper—*Bell Lever Box.*

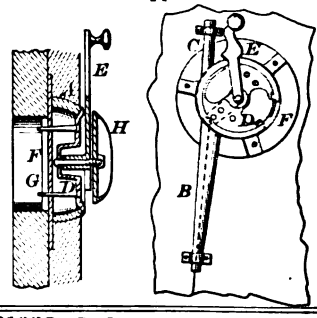

91023—D. Jones—*Water Elevator.*

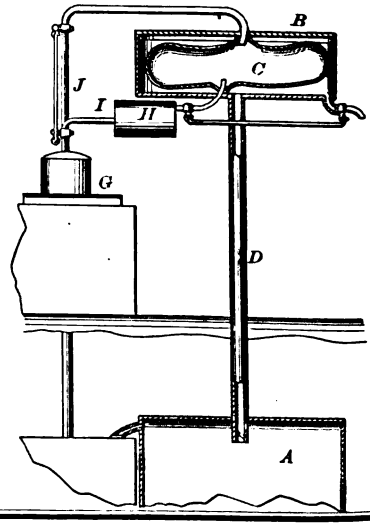

91020—J. Horton—*Shade for Burners.*

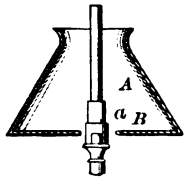

91021—D. Howarth—*Refrigerator.*

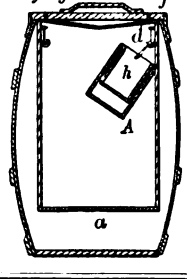

91022—C. N. Hoyt—*For Parlor Games.*

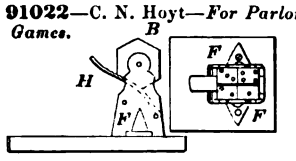

91024—S. G. Jones—*Harrow.*

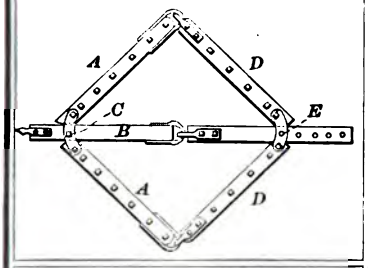

91025—Keating & Waymouth—*For Making Paper Boxes.*

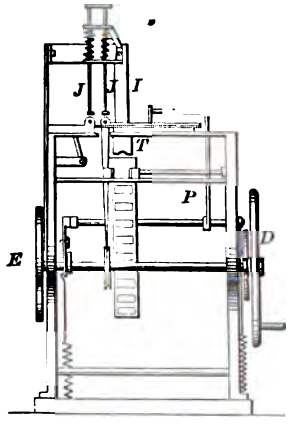

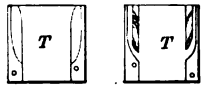

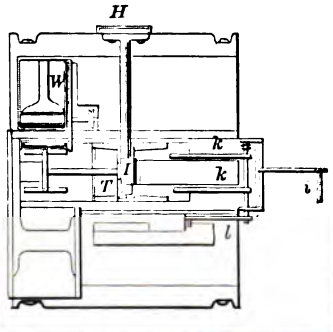

91026—D. Kidder—*Shutter Worker.*

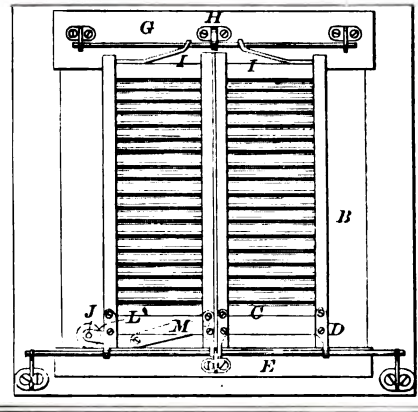

91027—J. C. Klein—*Rake.*

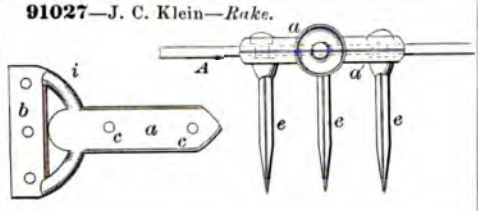

91028—C. Layton—*Car Coupling.*

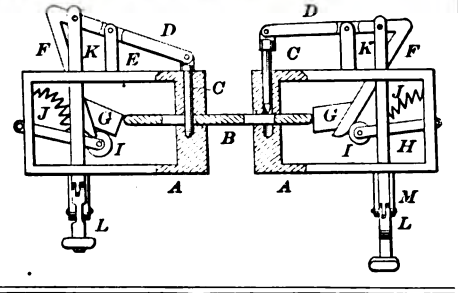

91029—J. Lenhard—*Violin.*

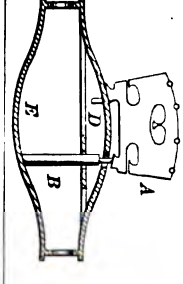

91031—A. J. Lewis—*Plow.*

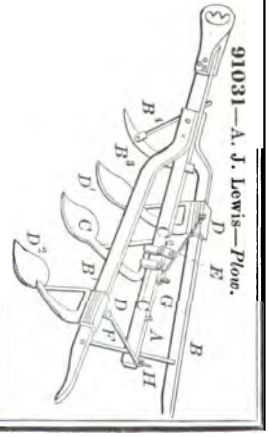

91030—Leroy & Strasser—*Mosquito Net Supporter.*

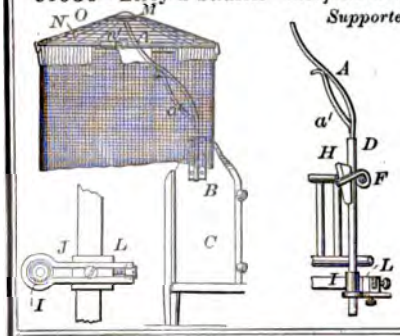

91033—A. Matson—*Ironing Board.*

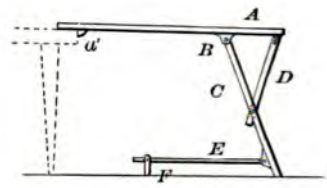

91032—J. G. Luscomb—*Fly Frame.*

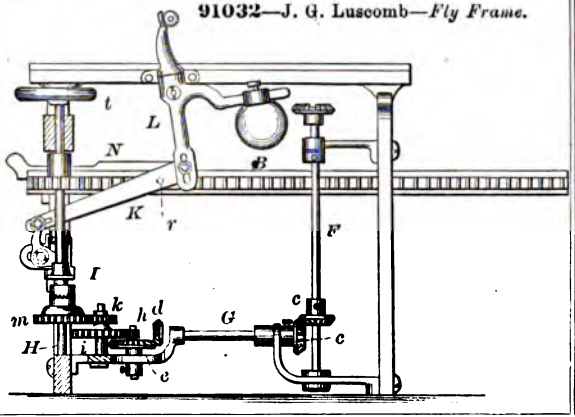

91034—G. B. McDonald—*Cotton Bale Tie.*

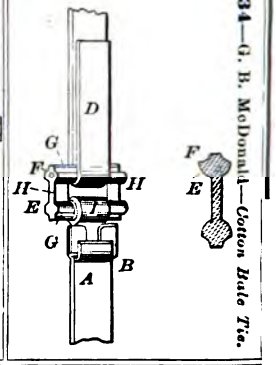

91035—J. W. McMillian—*Velocipede.*

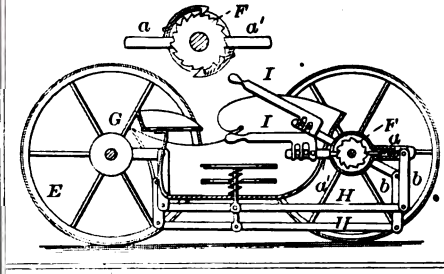

91037—F. E. Nearing—*Horse Rake and Hay Spreader.*

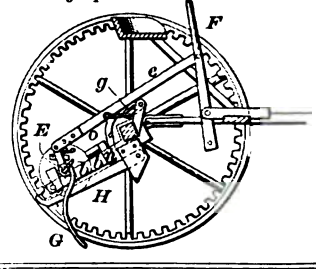

91036—F. A. Morley—*Potato Digger.*

Fig. 1

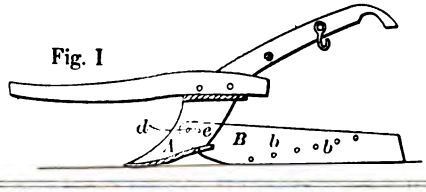

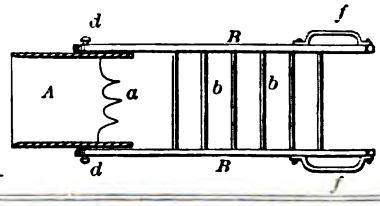

91039—W. G. Philips—*Step Ladder.*

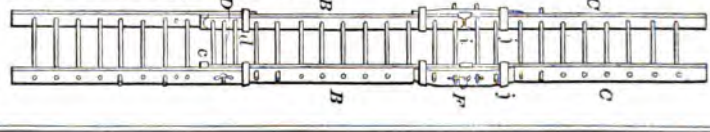

91040—A. P. Plant—*Tool for Trimming Bolt Heads.*

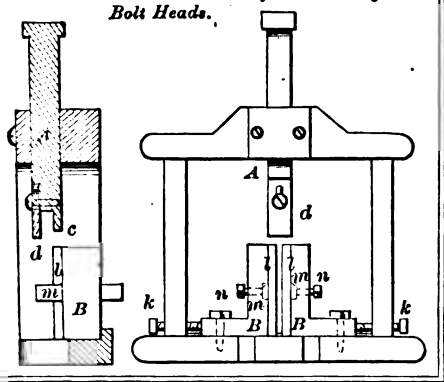

91041—S. D. Rader—*Brick and Sand Dryer.*

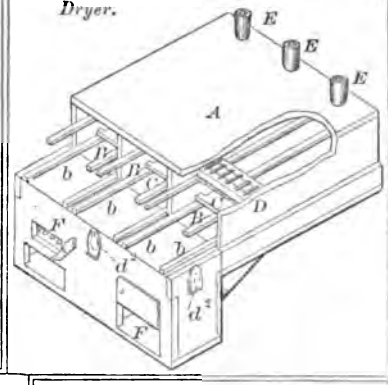

91044—N. Repp—*Nail Clincher for Horse Shoes.*

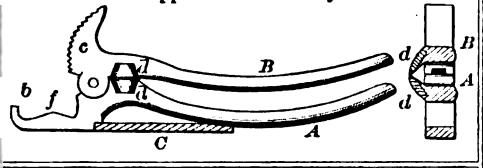

91043—T. & W. L. Reese—*Fastening for Fireproof Shutters.*

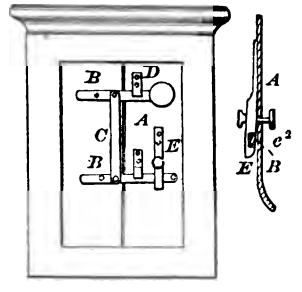

91042—P. H. Raiford—*Anchor for Animals.*

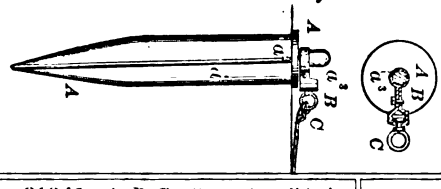

91045—A. Roff—*Operating Ships' Pumps.*

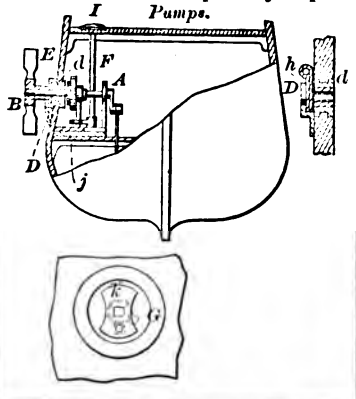

91047—J. A. Sevey—*For Splitting Whalebone.*

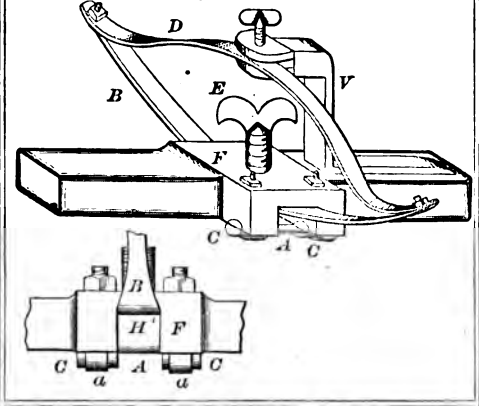

91046—J. Schermerhorn—*Vegetable Gatherer.*

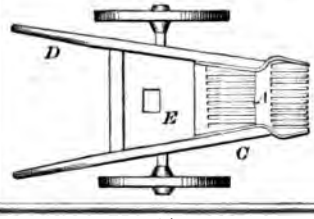

91048—H. Shutts—*Mechanical Movement.*

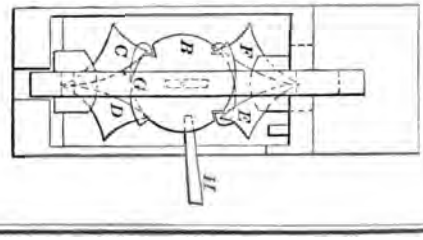

91049—W. Smith—*Stump Extractor.*

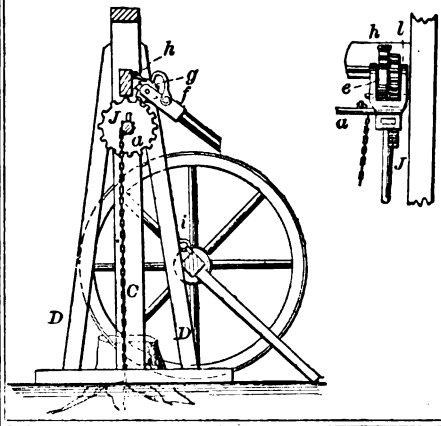

91053—P. W. Thomas—*Sad Iron Heater.*

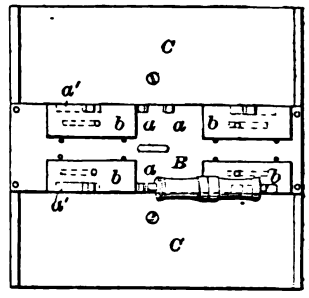

91050—J. J. Switzer—*Loom.*

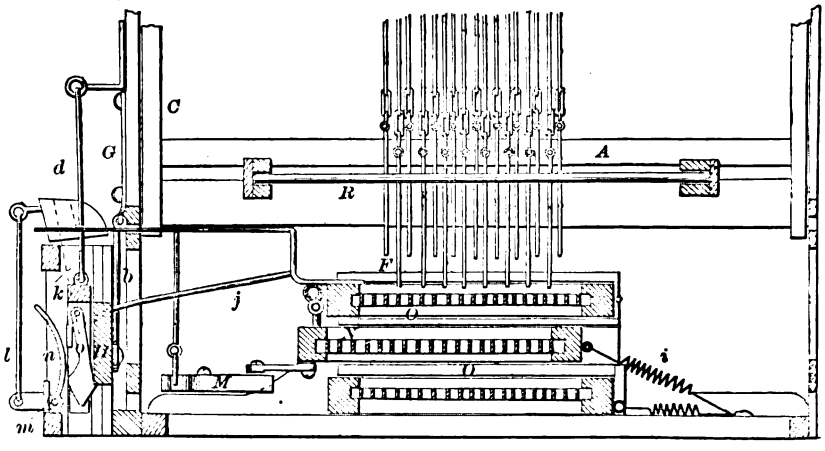

91051—A. Thoma—*For Extracting Zinc from its Ores.*

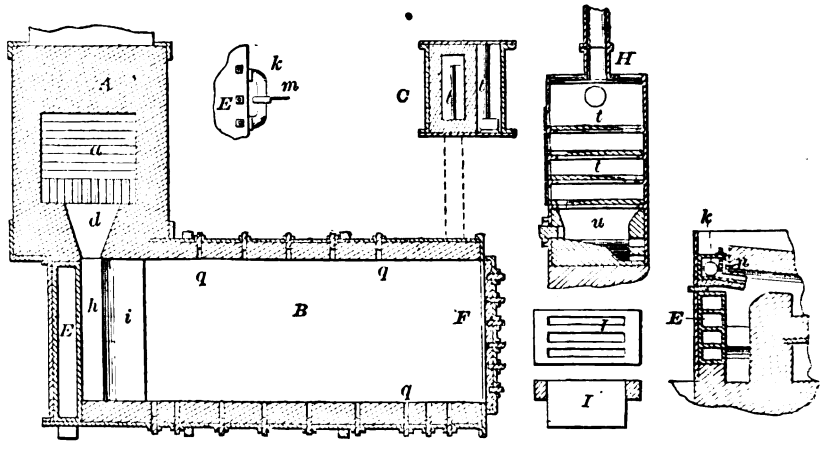

91052—A. Thoma—*Zinc Furnace.*

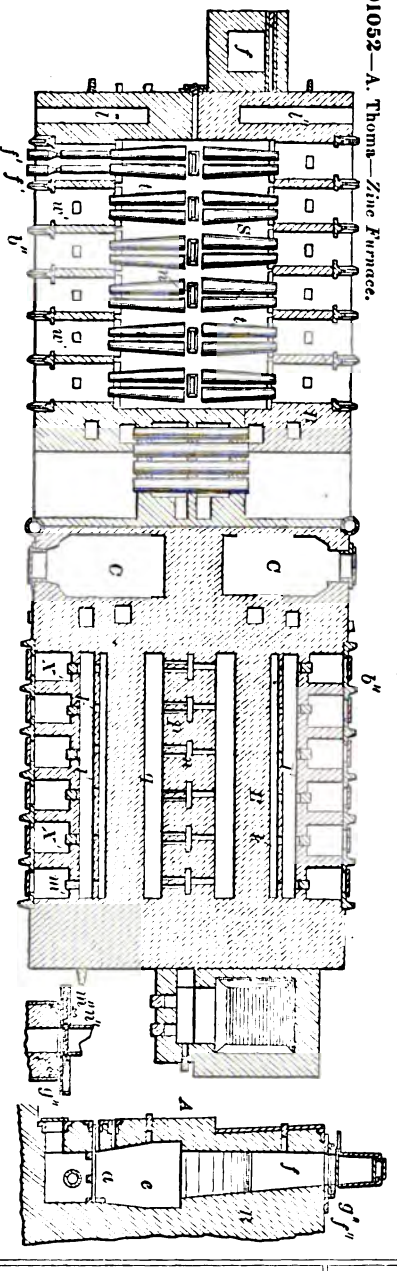

91054—F. Thrall—*Dough Kneader.*

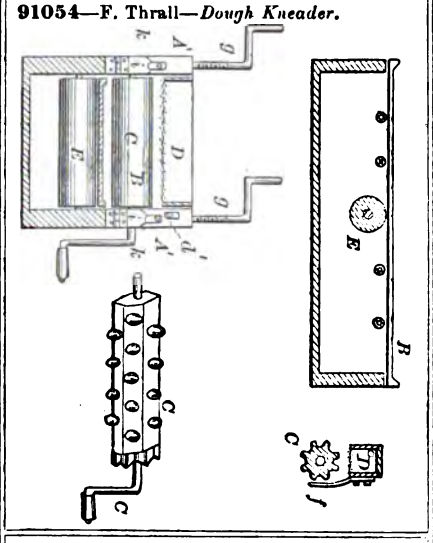

91055—A. Trolan—*For Double Seaming Sheet Metal.*

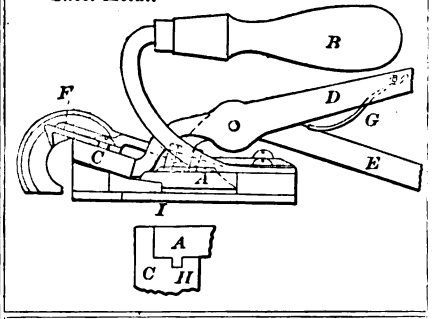

91056—J. W. Truman—*Pen.*

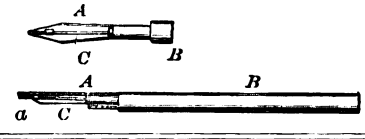

91059—T. C. Aldridge—*Fireplace.*

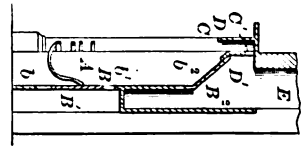

91058—F. H. Aiken—*Cartridge Case Cleaner.*

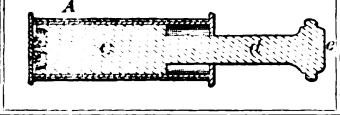

91057—S. W. Adwen—*Baling Short Cut Hay and Straw.*

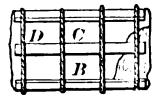

91062—G. B. Ambler—*Velocipede Saddle.*

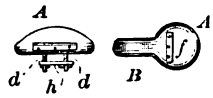

91060—A. M. Allen—*Valve Gear.*

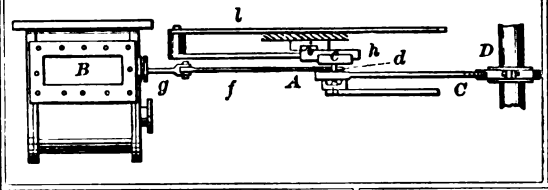

91064—E. J. Amor—*Tool Handle.*

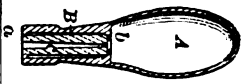

91063—I. Amies—*Hatchway for Buildings.*

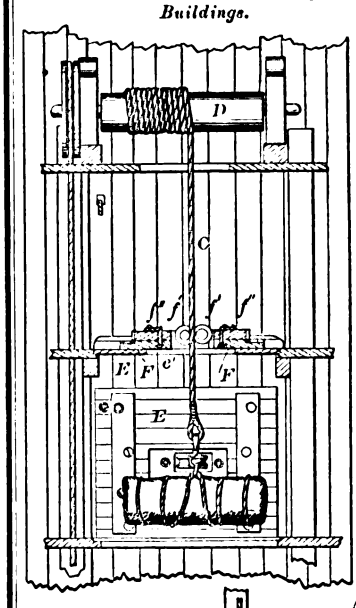

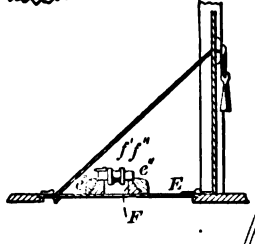

91061—A. M. Allen—*Velocipede.*

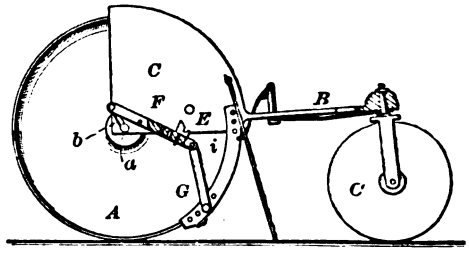

91065—A. G. Andrén—*Vise.*

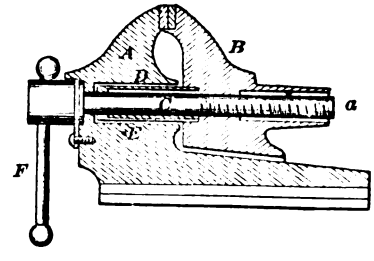

91066—Babbett & Binney—*For Making Coal Gas.*

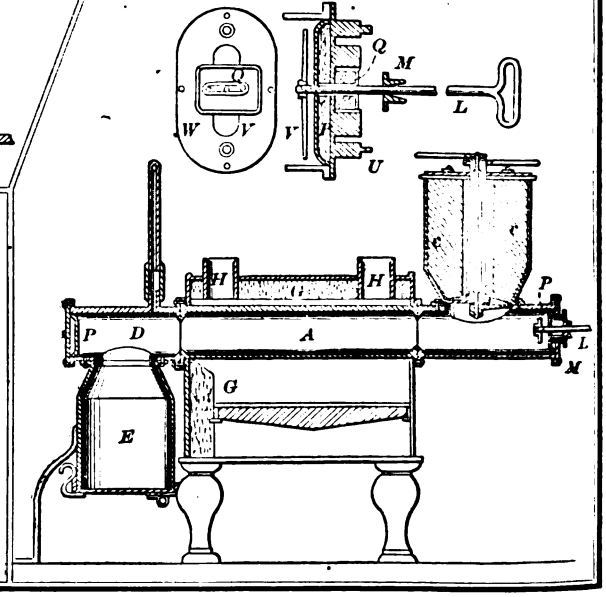

91072—A. B. Bean—*Ratchet Feed.*

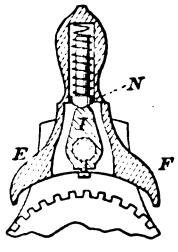

91067—C. F. Babcock—*Grain Separator.*

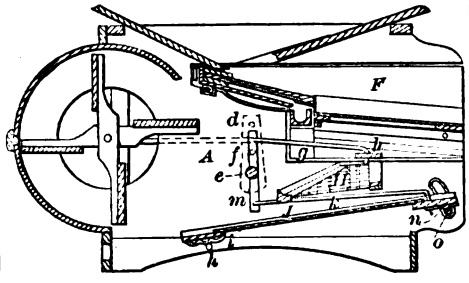

91068—Q. S. Backus—*Vise.*

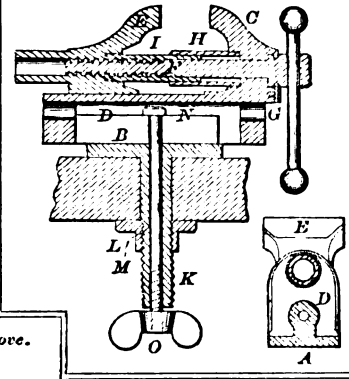

91069—L. F. Bancroft—*Steam Generator and Stove.*

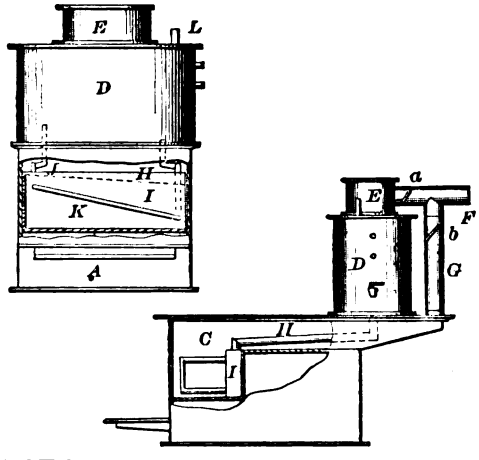

91073—H. E. Blenker—*Stove Drum.*

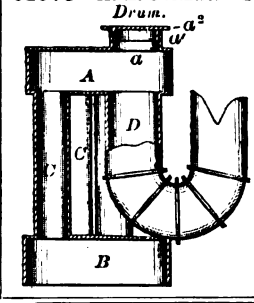

91071—A. E. Beach—*Shield for Tunneling.*

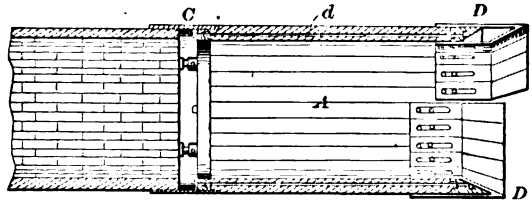

91075—Borst & Wonsey—*Mail Bag.*

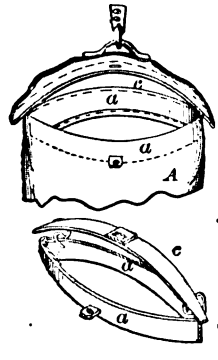

91077—T. W. Bracher—*For Cutting Hat Tips*

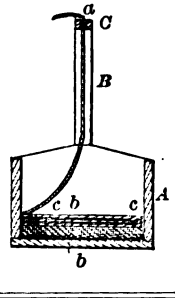

91074—A. Booth—*For Turning Wagon Axles.*

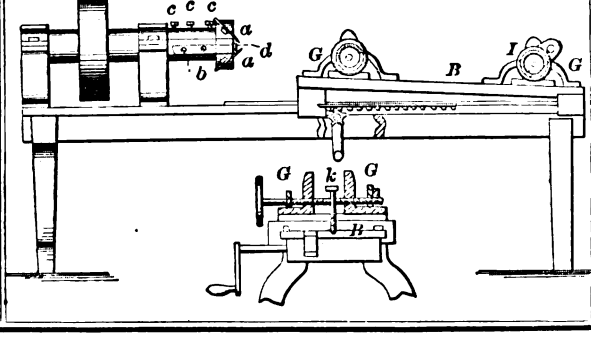

91076—G. S. Bosworth—*Stove.*

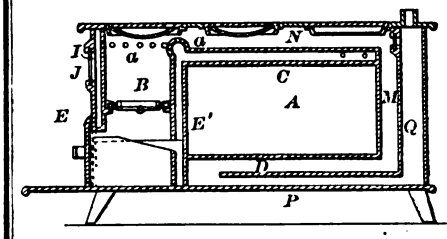

91079—H. L. Brevoort—*For Operating Throttle Valves.*

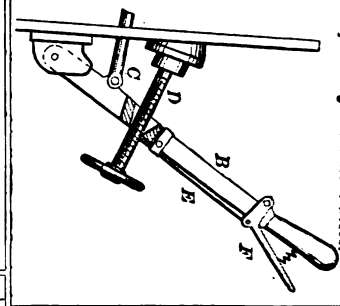

91078—J. Bradley—*Horse Hay Fork.*

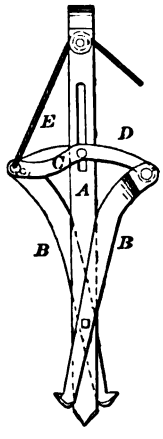

91083—G. J. Capewell—*Securing Buttons to Fabrics.*

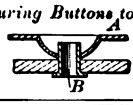

91081—G. Burch—*For the Manufacture of Bracelets.*

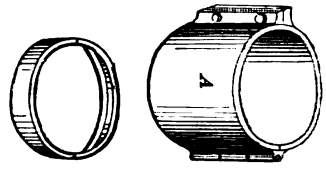

91086—S. Chandler—*Caster.*

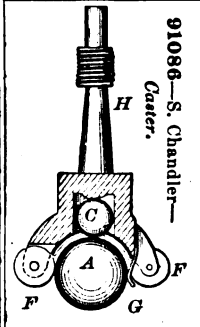

91082—Caffrey & Nettleton—*For Milling the Body of Keys.*

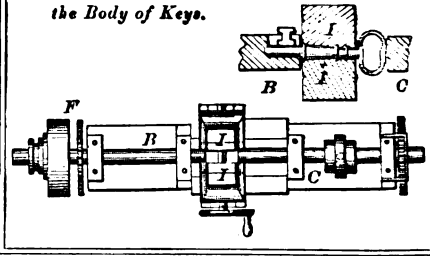

91084—D. F. Carr—*Cultivator.*

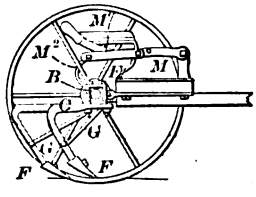

91088—P. Christiansen—*Sash Balance.*

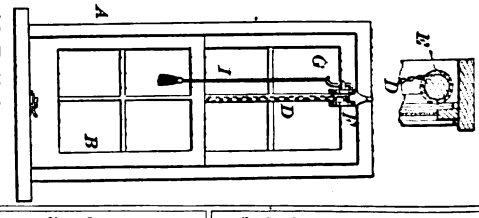

91085—T. Carr—*For Disintegrating Fertilizers, &c.*

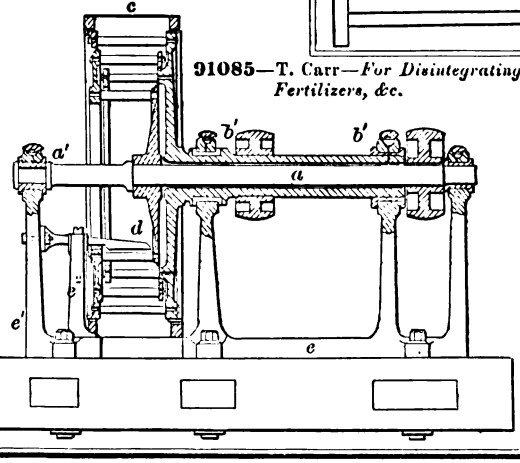

91087—S. G. Cheever—*Harness.*

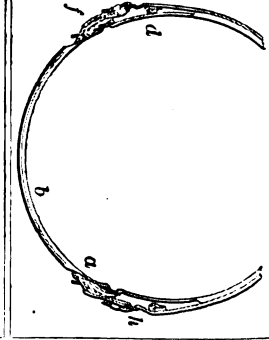

91089—W. B. Coates—*Hair Dyeing Brush.*

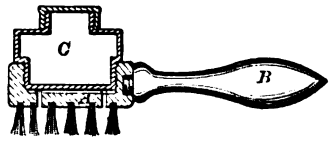

91091—J. Crookes—*Cotton Bale Tie.*

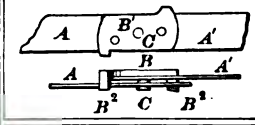

91096—H. A. Devendorf—*Paper Box.*

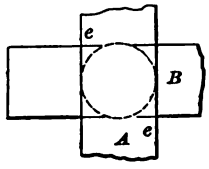

91098—D. Dill—*Peanut Oven.*

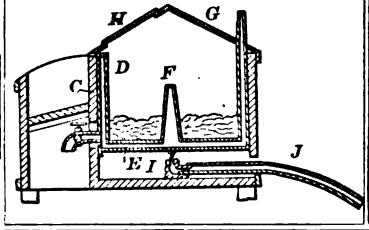

91092—J. G. Cullmann—*For Preventing Injury to Liquor on Tap.*

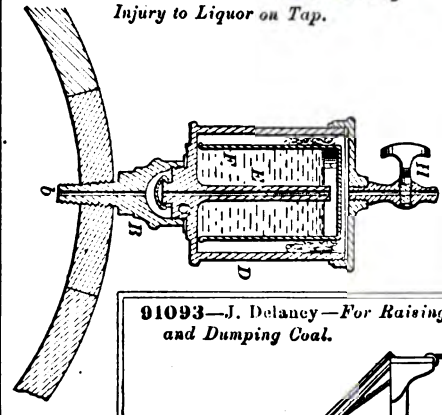

91093—J. Delaney—*For Raising and Dumping Coal.*

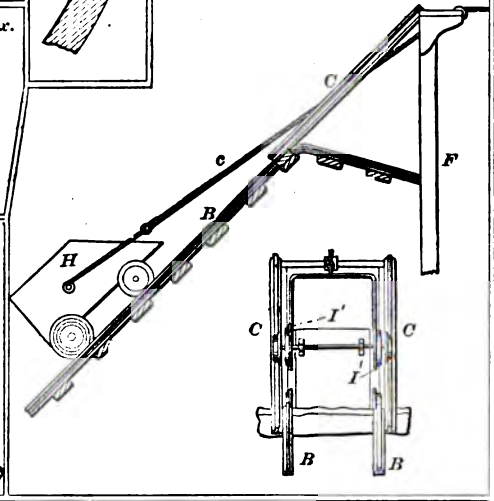

91095—F. A. Desloge—*Clothes Mangle.*

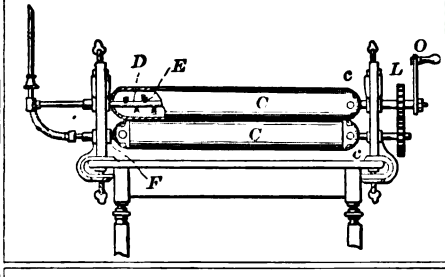

91099—J. Dourson—*Extension Table.*

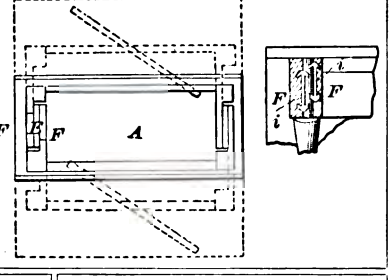

91097—J. L. Devol—*Saw Set, Gummer, Punch and Wire Cutter.*

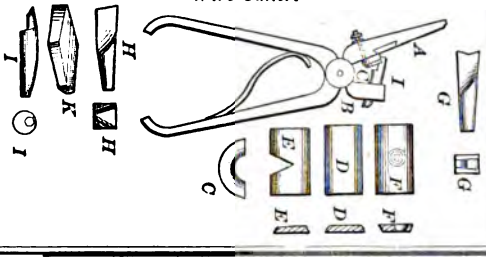

91100—N. A. Downer—*For Reducing the Size of Plaster Moulds.*

91101—W. Duchemin—*Sewing Machine.*

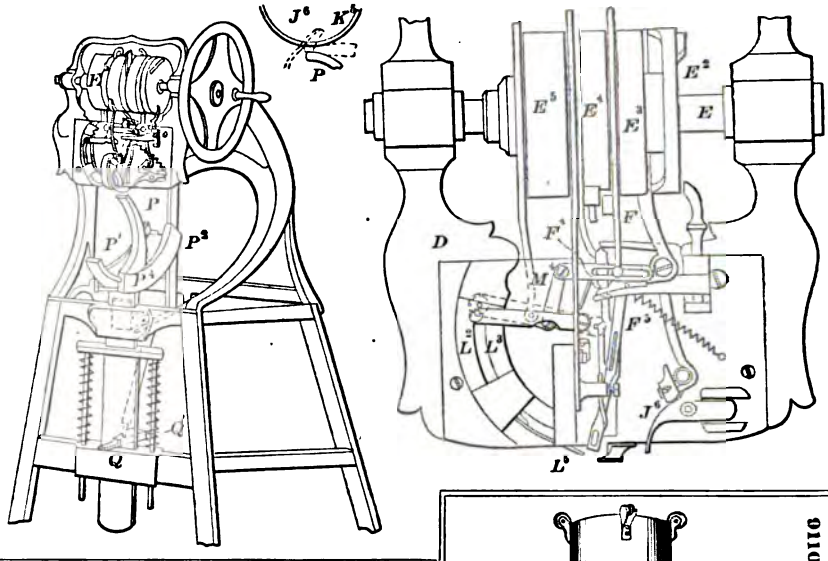

91103—W. W. Dungan—*Steam Generator Smoke Stack.*

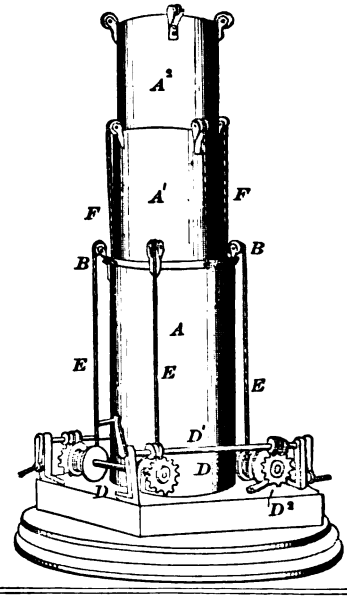

91105—Z. Eastman—*Street Car.*

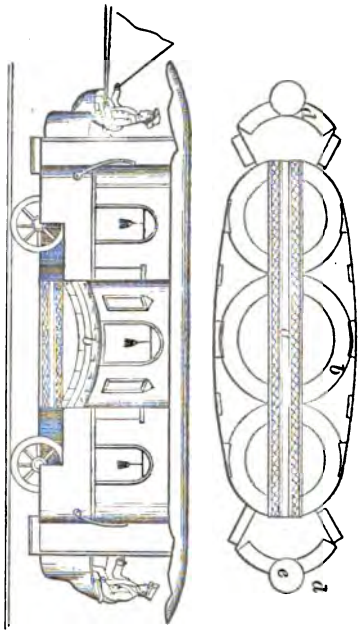

91104—J. E. Earle—*Tea and Coffee Pot.*

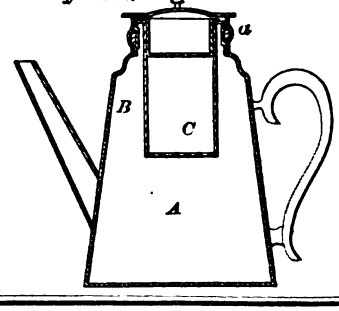

91102—G. L. Du Lancy—*Harvester Cutter.*

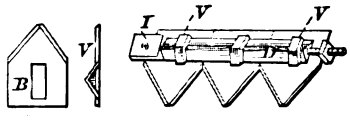

91106—J. H. Ernest—*Corn Planter.*

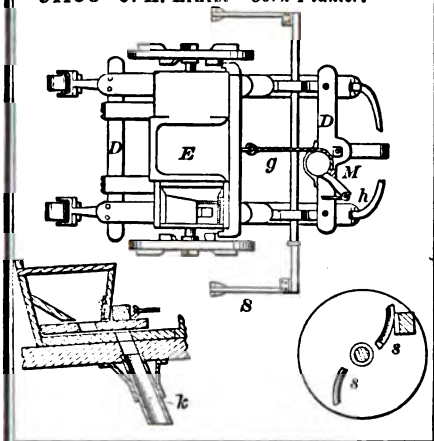

91107—F. Fischbeck—*Traveling Bag Frame.*

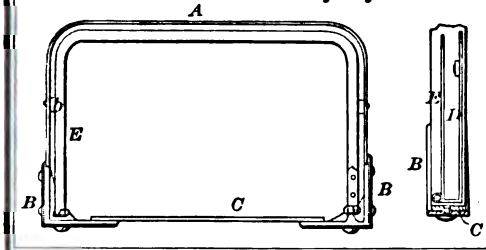

91108—A. C. Fletcher—*Postage Stamp, &c.*

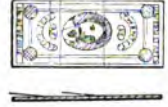

91109—F. M. Franklin—*Plow.*

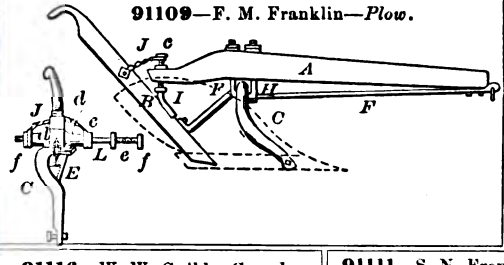

91110—W. D. Freeman—*For Cleaning Oats.*

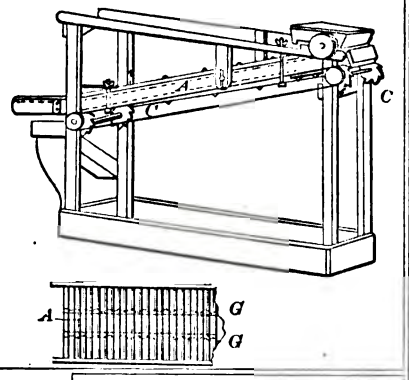

91112—M. E. Frentz—*Corset Fastening.*

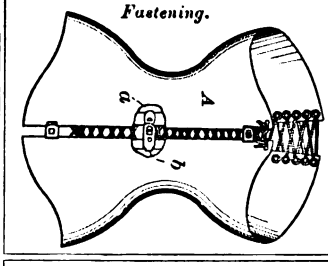

91113—S. Goge—*Glove.*

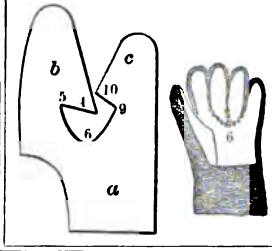

91116—W. W. Guild—*Guard for Door Knobs.*

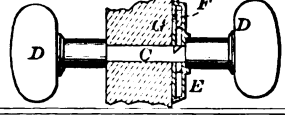

91111—S. N. French—*Carpet Fastener.*

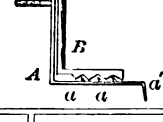

91115—F. Grinnell—*Axle Box Cover.*

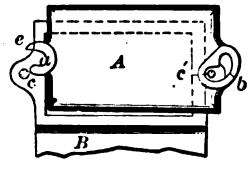

91118—R. D. Haines—*Mould for Glassware.*

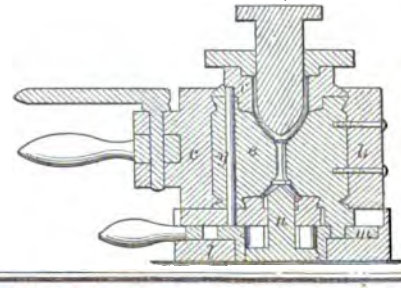

91117—N. B. Hadley—*For Threading Screws.*

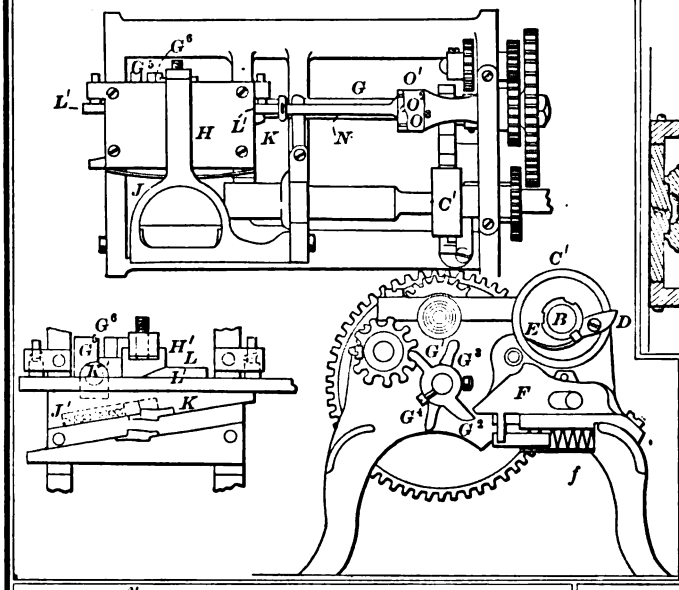

91119—R. D. Haines—*Solid Glassware Mould.*

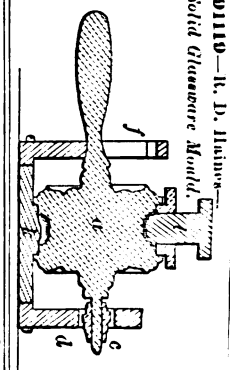

91120—Hall & Lee—*Steam Packing.*

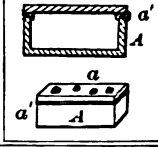

91121—E. R. Hall—*Sawing Machine.*

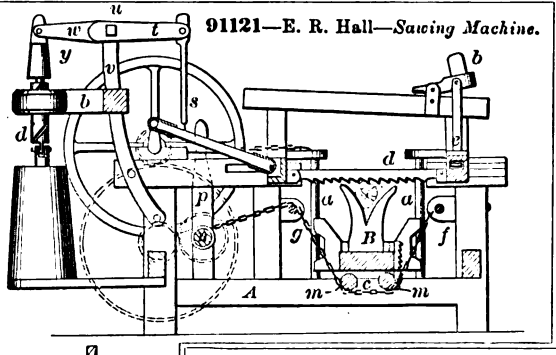

91122—W. H. Hall—*Heel Guard for Horses.*

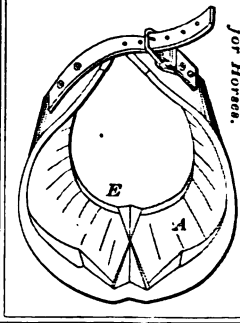

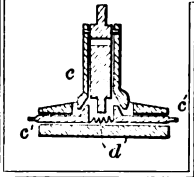

91123—W. S. Hall—*Homomotive.*

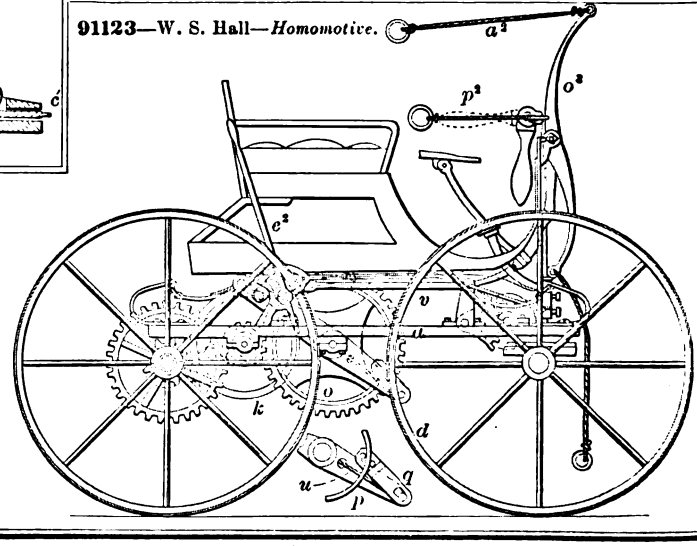

91124—G. Halstead—*Iron Truss Bridge.*

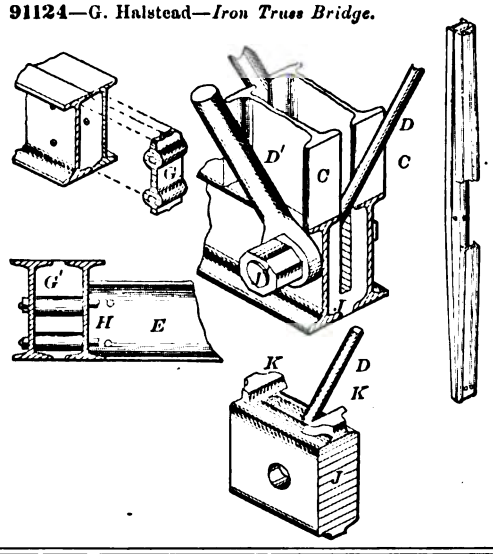

91126—C. C. Hare—*Current Changing Apparatus.*

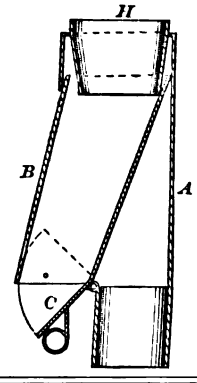

91125—G. Halstead—*Wrought Iron Column.*

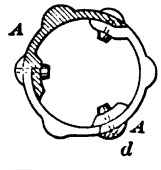

91127—J. K. Harris—*Harness.*

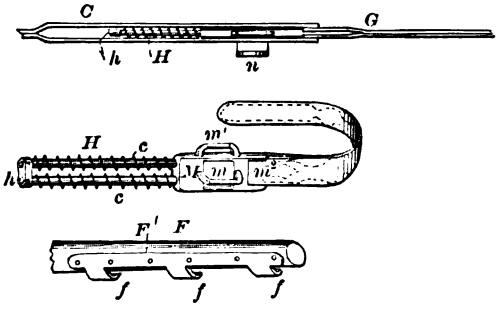

91130—A. B. Hendryx—*Lamp Shade.*

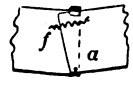

91128—W. Hawkins—*Meal Separator.*

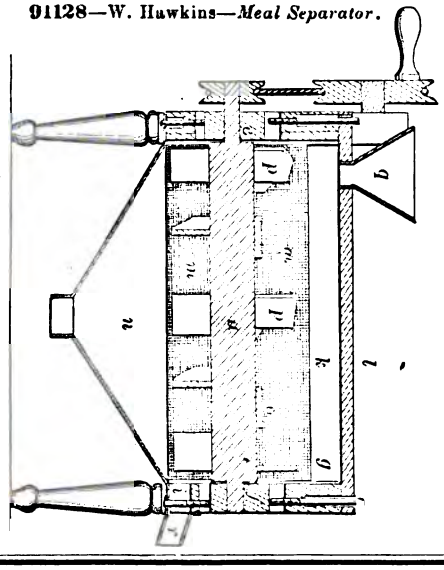

91129—J. Heckendorn—*Plow.*

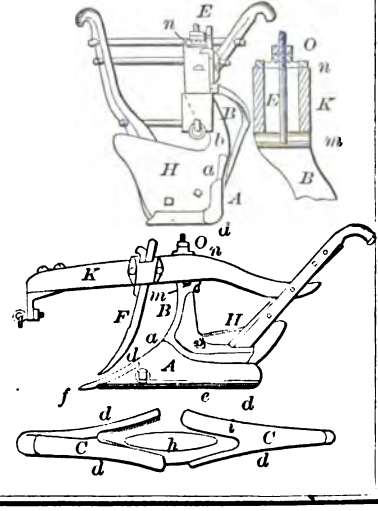

91131—J. Herr—*Animal Trap.*

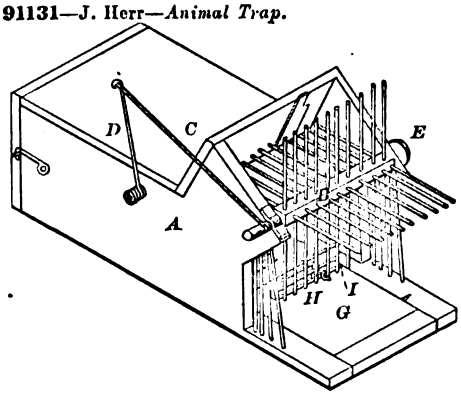

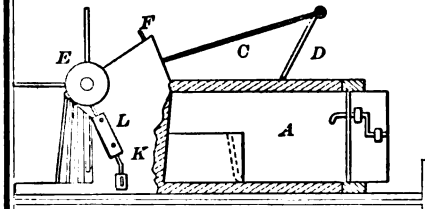

91132—Hersey & Hawes—*Glassware Press.*

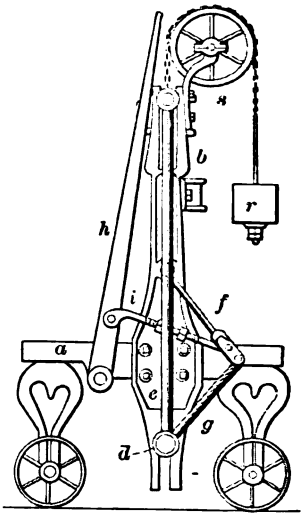

91134—G. H. Hurd—*Regulator for Vulcanizing Apparatus.*

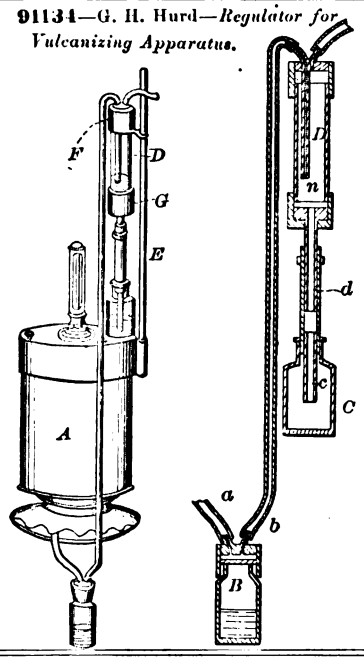

91135—C. F. Jacobsen—*Chandelier.*

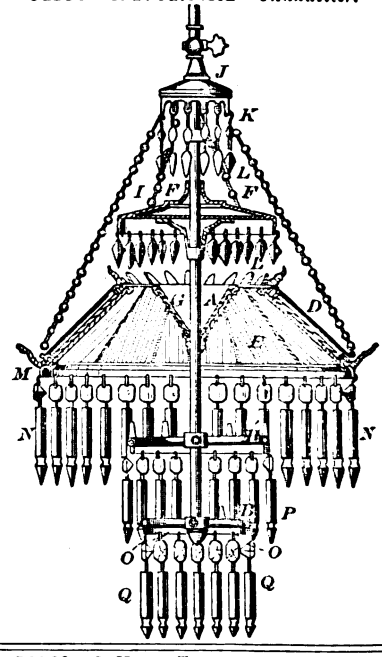

91137—J. Kay—*Tuyere.*

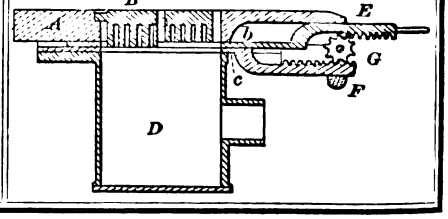

91138—J. J. Kenna—*For Polishing Shirt Bosoms.*

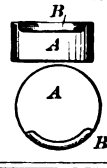

91136—J. L. Joyce—*For Cutting Down Boot and Shoe Heels.*

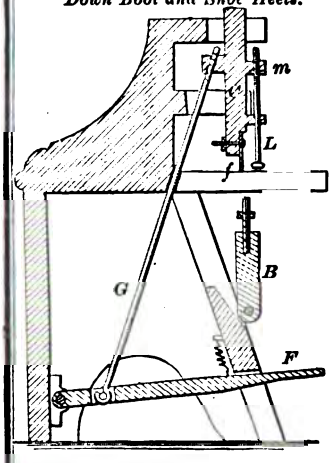

91139—L. W. Langdon—*Lock.*

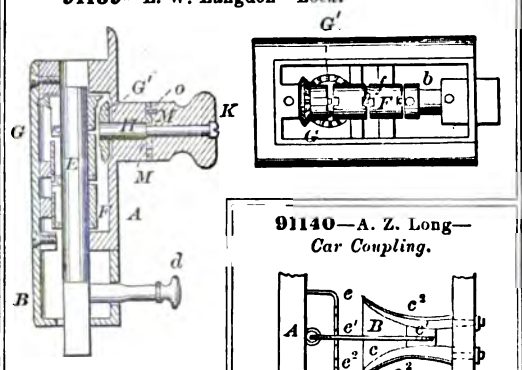

91140—A. Z. Long—*Car Coupling.*

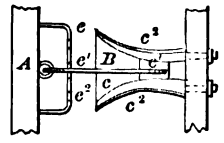

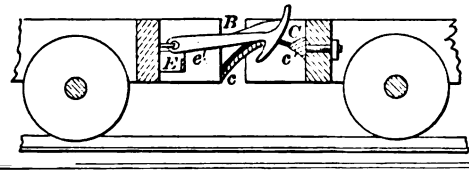

91141—J. C. Love—*Lamp Burner. d.*

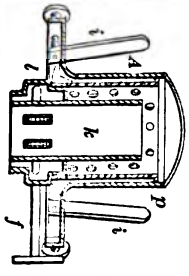

91142—O. Marland—*Hardening Steel.*

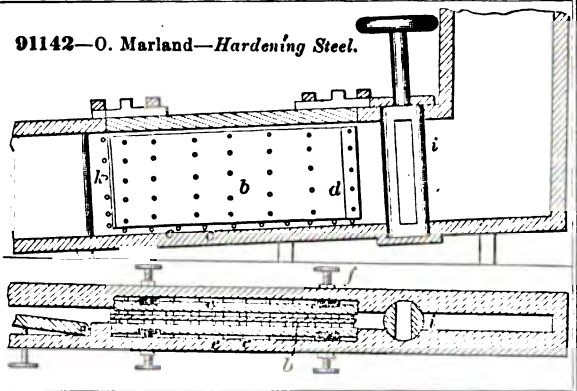

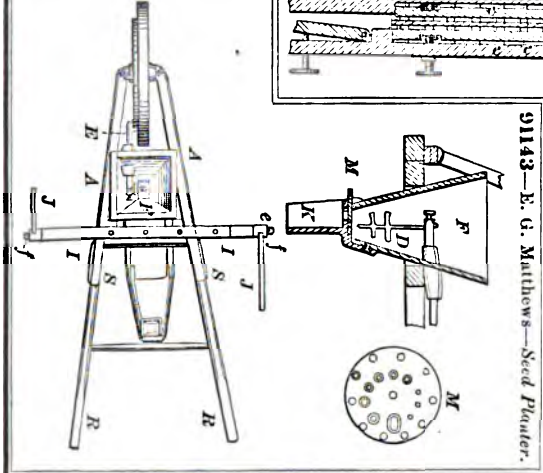

91143—E. G. Matthews—*Seed Planter.*

91144—E. G. Matthews—*Hand Cultivator.*

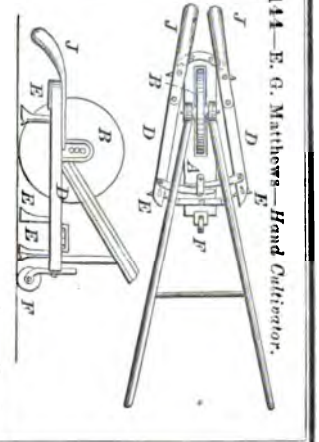

91146—R. A. McKanna—*Swivel Cock Eye.*

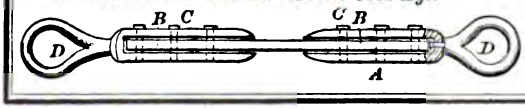

91145—I. W. McGaffey—*Sweeping Machine.*

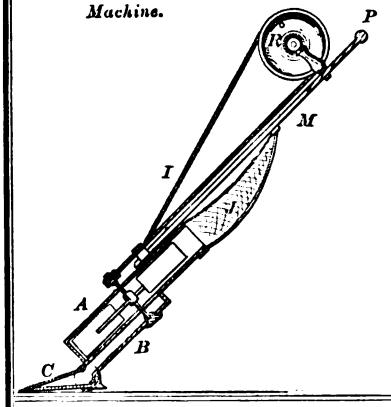

91147—A. J. & S. D. McKee—*Hay Loader.*

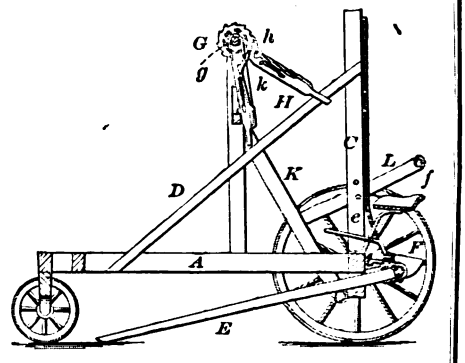

91148—W. L. McNeil—*Car Heater and Ventilator.*

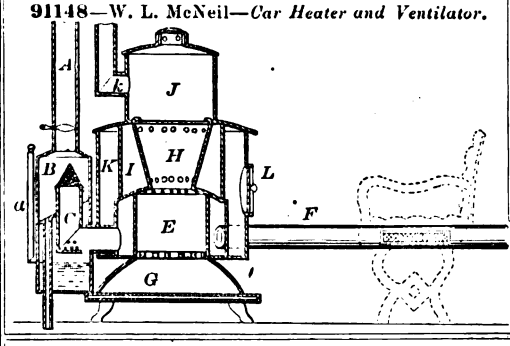

91149—S. W. Miller—*Sewing Machine.*

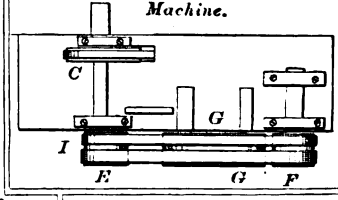

91150—S. G. Monce—*For Cutting Glass.*

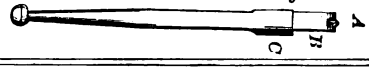

91151—J. A. Morrell—*Pump.*

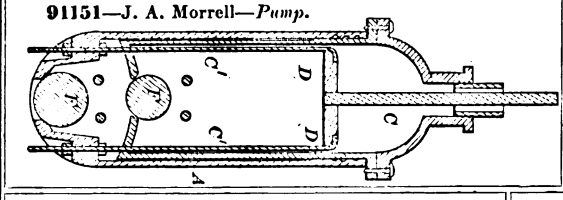

91152—A. J. Morse—*Syrup Cock.*

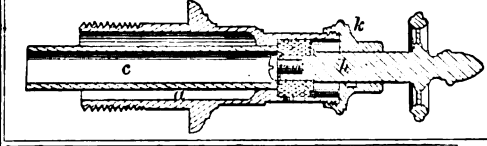

91153—P. C. Moulton—*Neck Tie Retainer.*

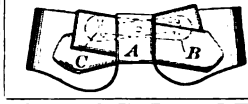

91154—T. H. Neal—*Attaching Handles to Picks.*

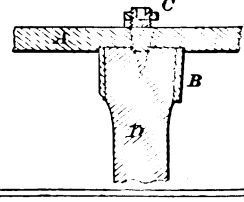

91155—I. E. Newton—*Stone Cutting and Dressing Saws.*

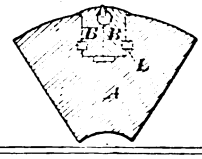

91156—O. R. Nitsch—*Fan.*

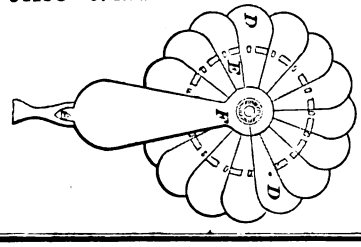

91158—J. F. Paul—*Wood Pavement.*

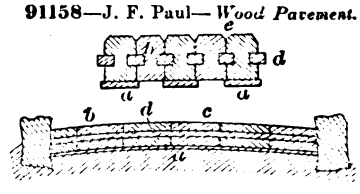

91157—W. O'Neill—*Plow.*

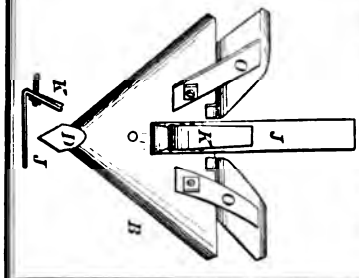

91159—C. Peck—*Lifting Device for Drop Presses and Hammers*

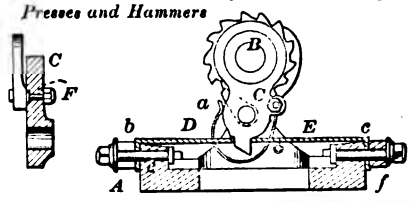

91160—G. C. Perry—*Horse Hay Fork.*

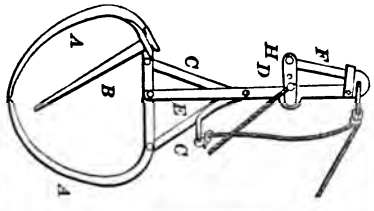

91161—O. M. Pond—*Seeder and Cultivator.*

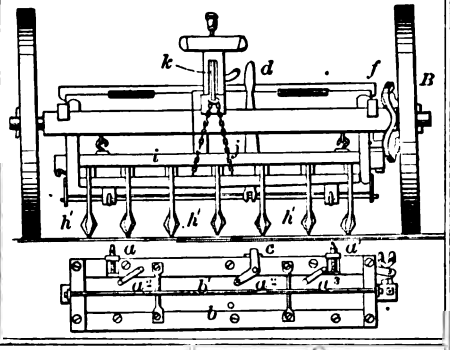

91162—J. M. Read—*Boot Crimper.*

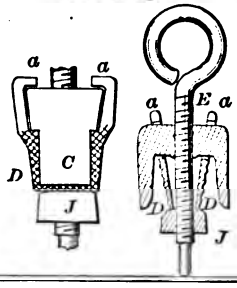

91163—J. Reiser—*Door Pulley.*

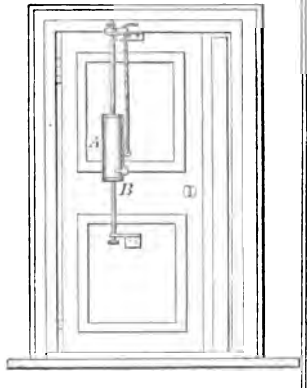

91164—S. Riley—*Shovel Plow.*

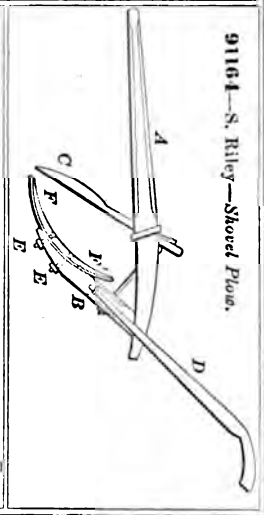

91167—I. J. Ryerson—*Gate Hinge.*

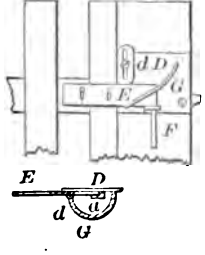

91165—W. D. Rinehart—*For Making Horse Shoes.*

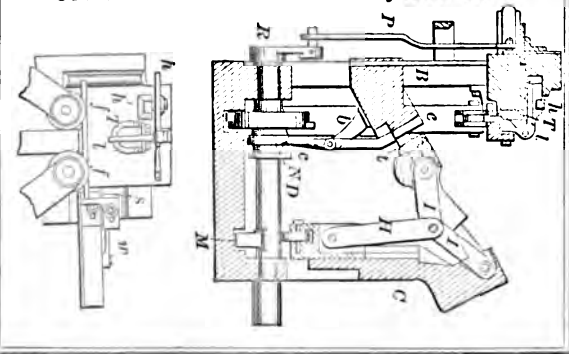

91166—C. A. Roberts—*Pen Rack.*

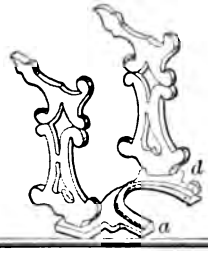

91168—M. Saulson—*Dinner Pail.*

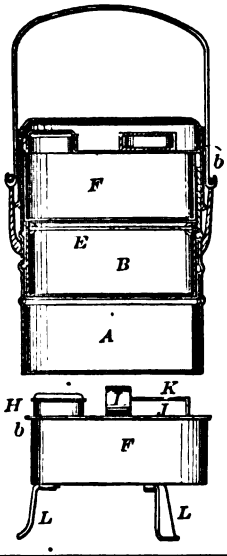

91169—F. Schmitt—*Velocipede.*

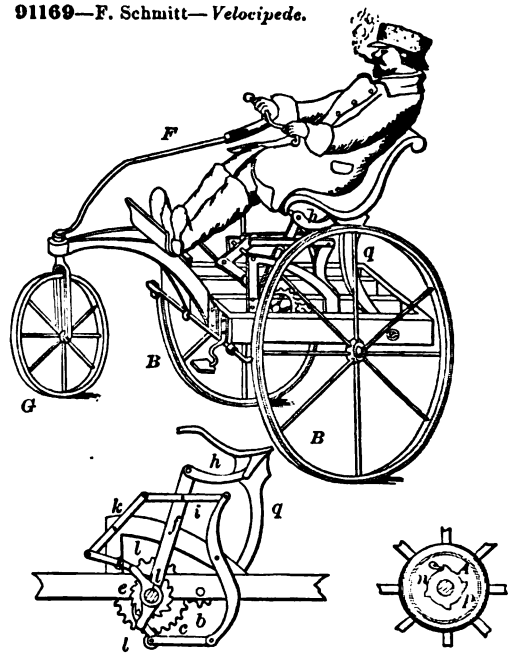

91170—C. H. Scholle—*Coffee Boiler.*

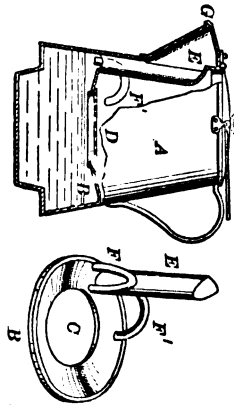

91173—E. B. Sintzenich—*Steam Generator.*

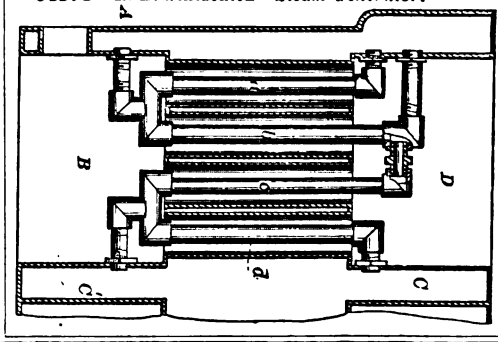

91171—F. Schweizer—*Bolt Heading Machine.*

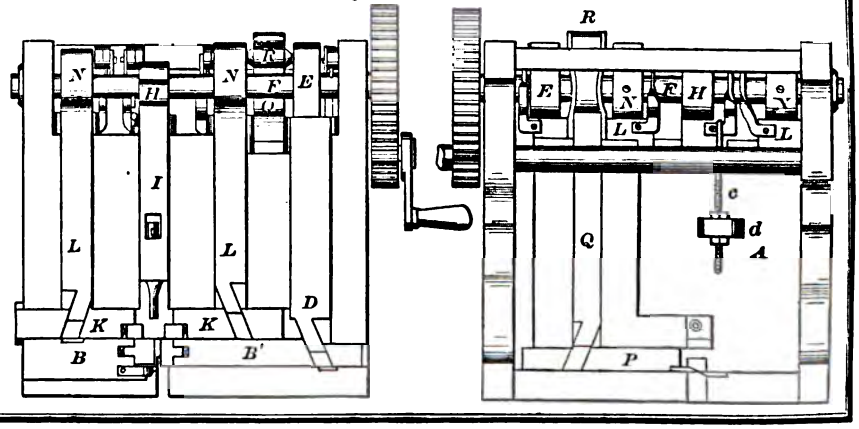

91172—J. F. Seiberling—*Harvester*

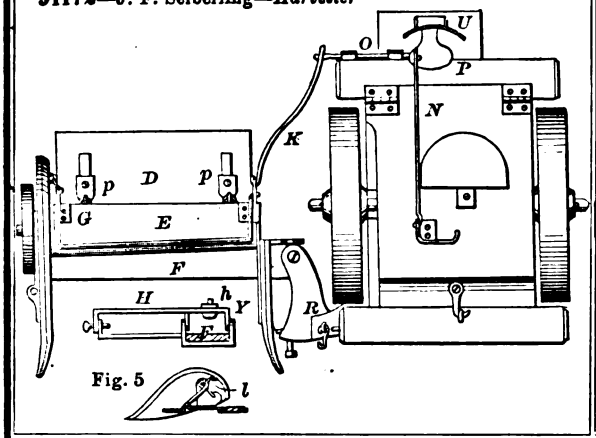

91174—T. Slaight—*Knob Latch.*

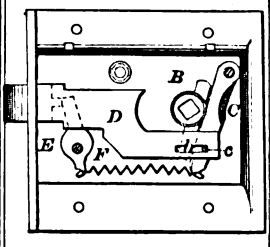

91175—D. McC. Smyth—*For Sewing Books.*

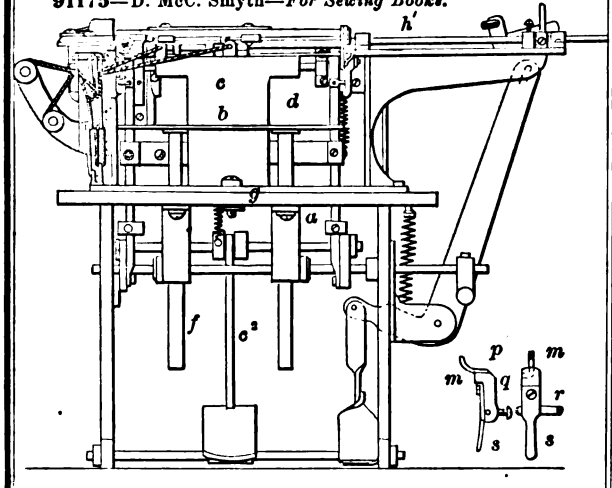

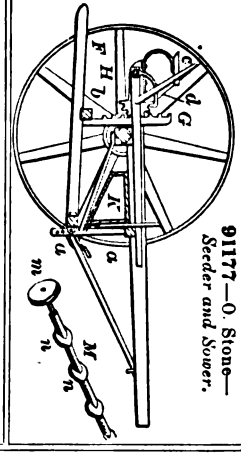

91177—O. Stone—*Seeder and Sower.*

91178—J. Stone—*For Welding and Cutting Railroad Rails.*

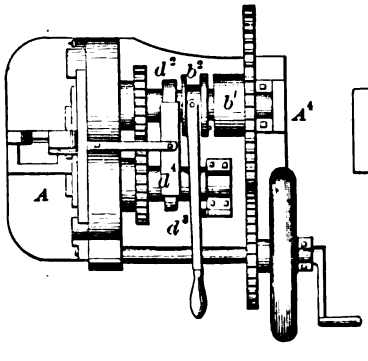

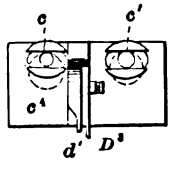

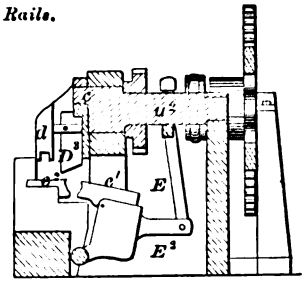

91179—T. B. Stout—*Carpet Stretcher.*

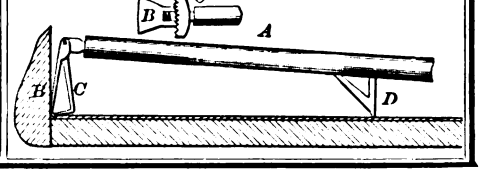

91180—Swartz & Opdycke—*Door Bolt.*

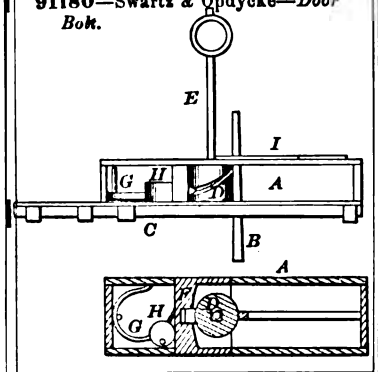

91182—D. C. Thomas—*Potato Digger.*

91183—J. L. W. Townsend—*Yoke.*

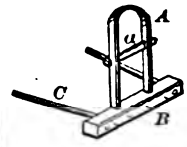

91181—Tatham & Steger—*Car Brake.*

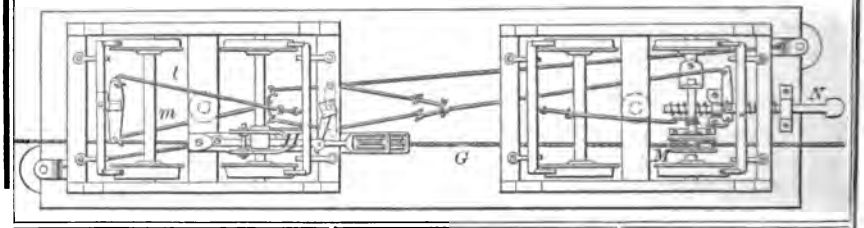

91184—J. L. Tucker—*Door Spring.*

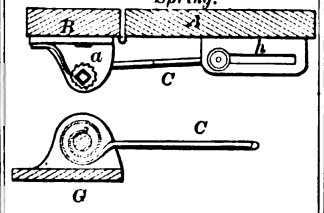

91185—W. P. Uhlinger—*Sawing Machine.*

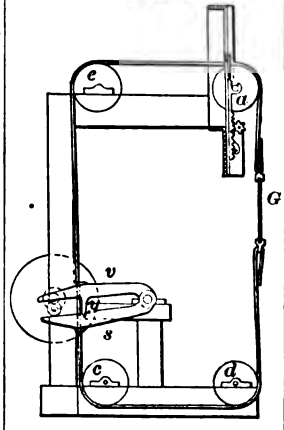

91187—C. Wetterhan—*Chair and Cradle Rocker.*

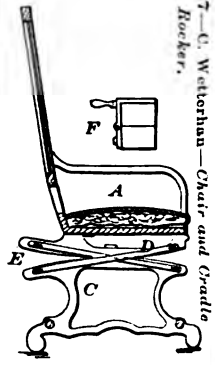

91186—R. B. Varden—*Stove.*

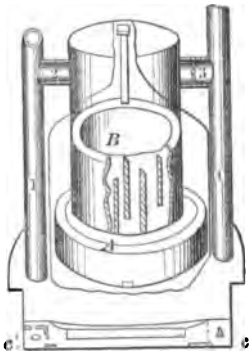

91189—D. Wilcox—*Hat.*

91190—A. Wilkin—*Fireplace.*

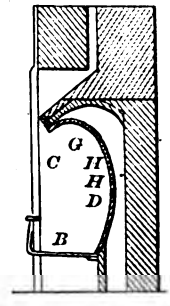

91188—R. White—*Lock Nut.*

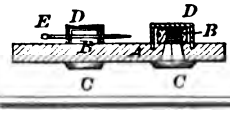

91191—J. K. Wright—*Printing Press.*

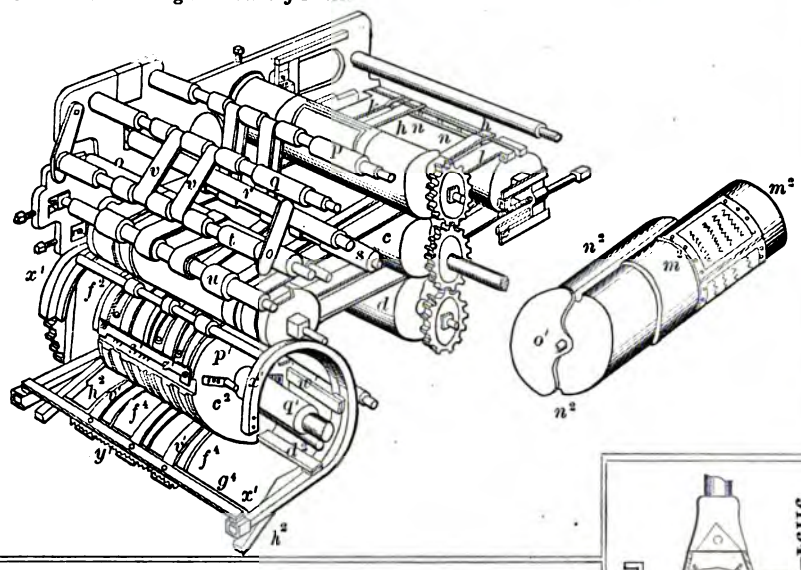

91192—H. C. Yerby—*Lantern*

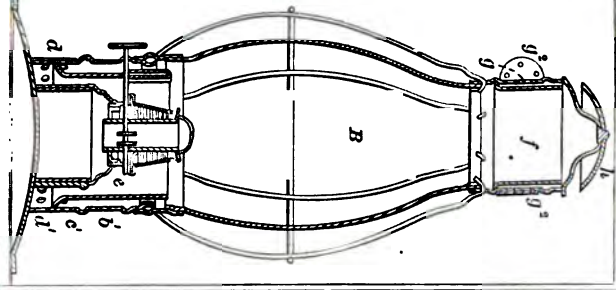

91194—J. C. Young—*Car Coupling.*

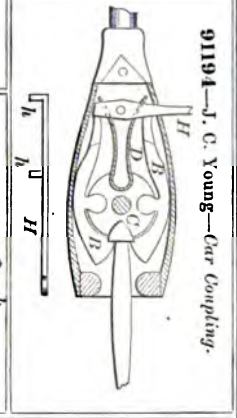

91193—J. Yost—*Elevator.*

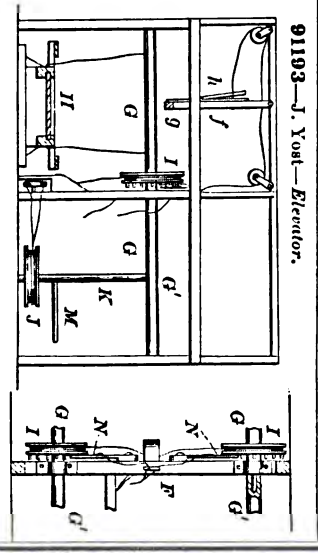

91195—C. Zaiser—*Lamp.*

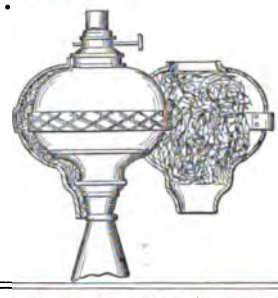

91196—A. Zink—*Propelling Apparatus.*

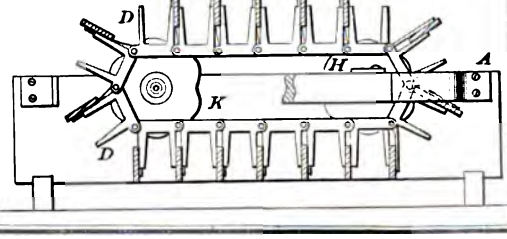

91197—S. C. Adams—*Nut Lock.*

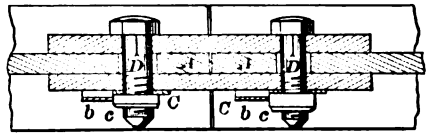

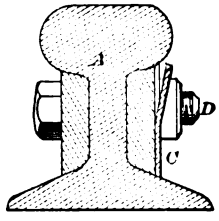

91200—A. P. Barlow—*Slide Block for Muley Saw Mills.*

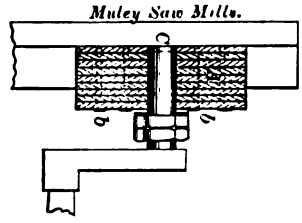

91199—N. Baldwin—*Vise.*

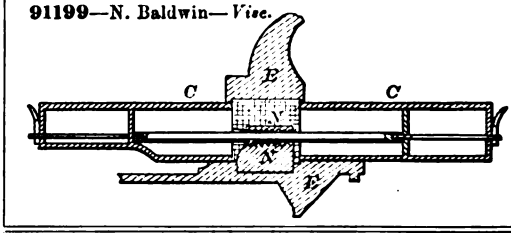

91201—W. Barry—

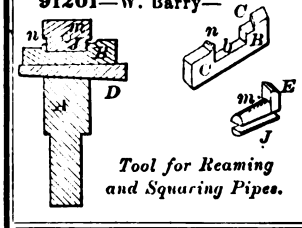

Tool for Reaming and Squaring Pipes.

91198—A. B. Auer—*Check Book Clip.*

91202—C. L. Beamer—*Grain Binder.*

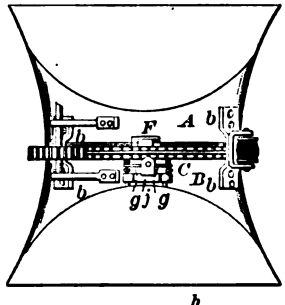

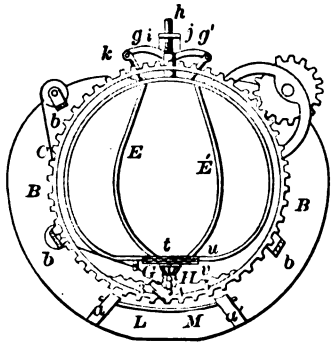

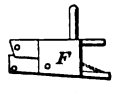

91203—H. Berix—*Beehive.*

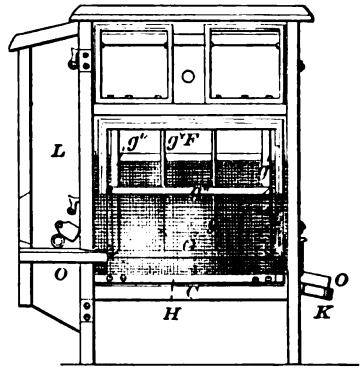

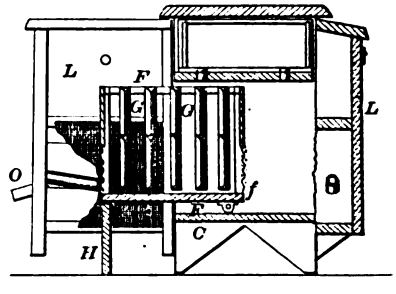

91204—C. W. Bierbach—*Wagon Wheel.*

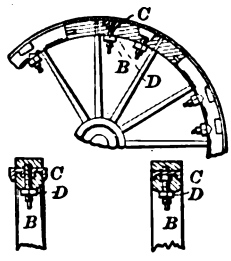

91205—Blakslee & Williams—*Injector.*

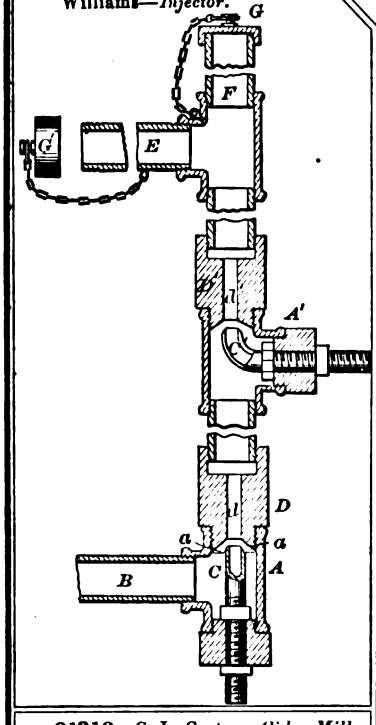

91206—A. W. Brian—*Cotton Seed Planter.*

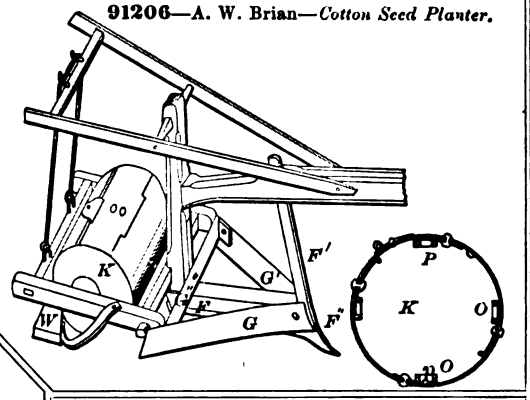

91207—Briggs & Howard—*Loom.*

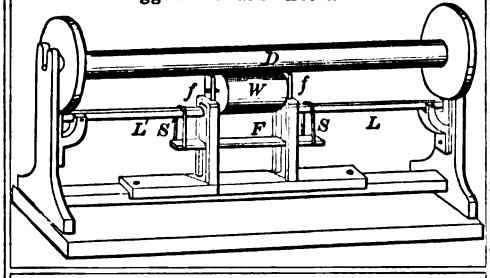

91208—A. W. Browne—*Lamp Burner.*

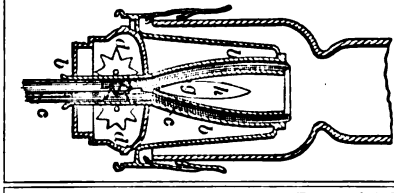

91209—B. Buckland—*Tinsmiths' Machine.*

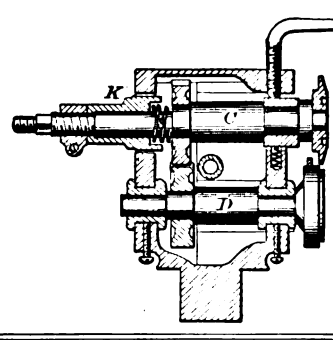

91210—C. L. Carter—*Cider Mill.*

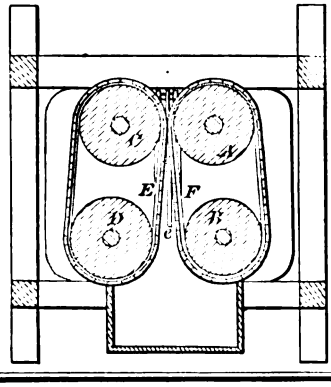

91212—B. M. Close—*Cultivator.*

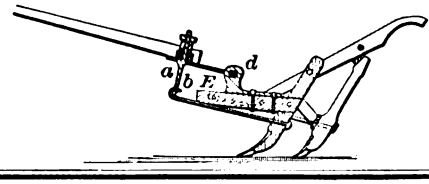

91215—T. Crane—*Knitting Machine.*

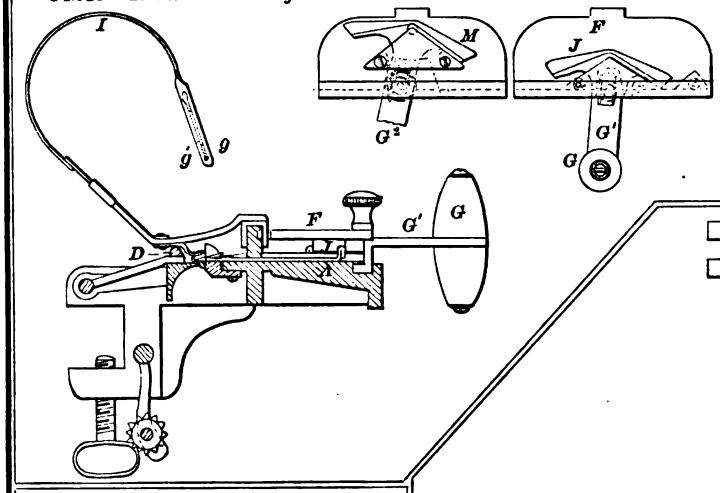

91213—W. H. Covel—*Carburetter.*

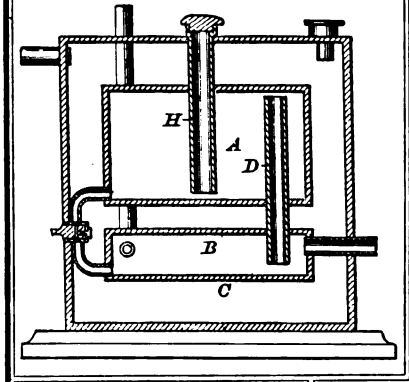

91211—P. Cheswell—*Locomotive Feed Pump.*

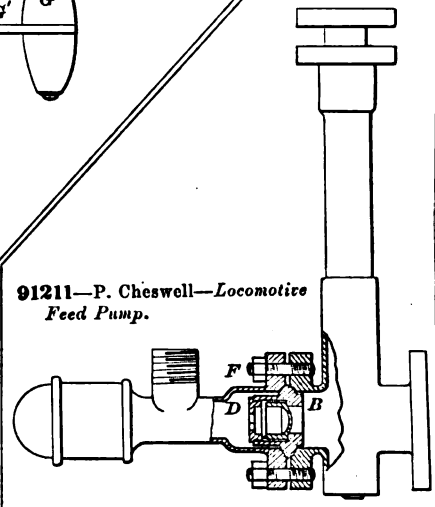

91214—T. Crane—*Knitting Machine.*

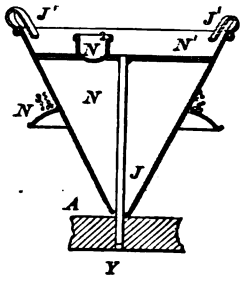

91217—W. Dixon—*Theatre Chair.*

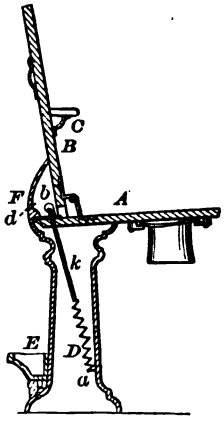

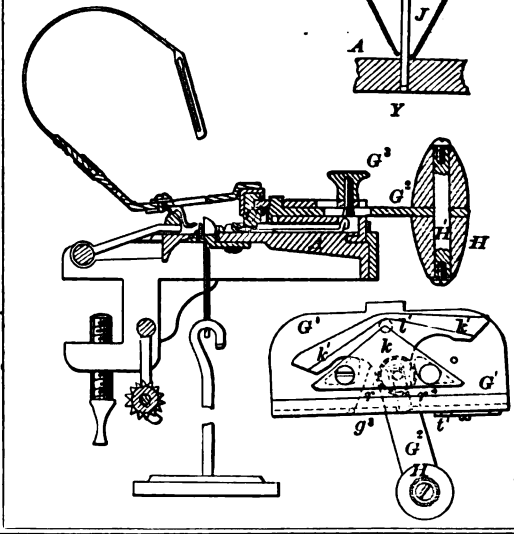

91219—P. Farrell—*For Finishing Leather, Paper &c.*

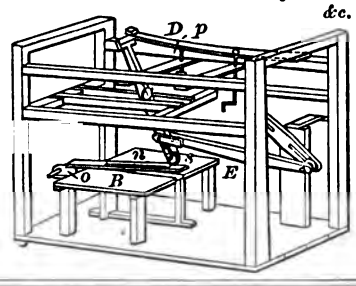

91220—W. E. Farrell—*Paper for the Manufacture of Paper Bags.*

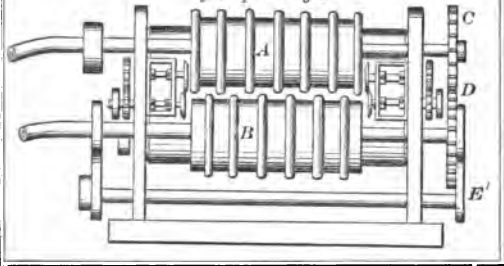

91221—A. C. Fletcher—*Paddle Wheel.*

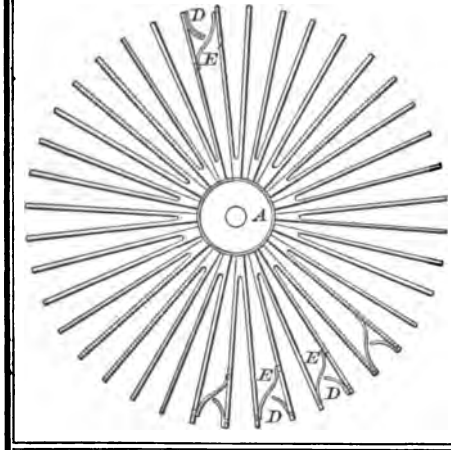

91222—O. V. Flora—*Door Spring.*

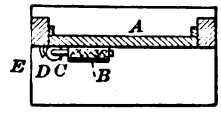

91224—W. Fuzzard—*Steam Engine.*

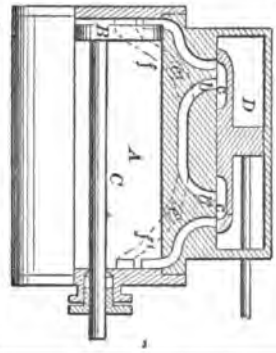

91225—A. J. Gibson—*Bung Cutter.*

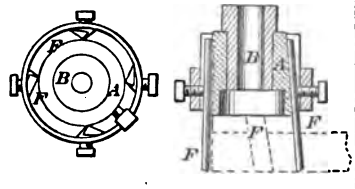

91226—R. E. Gleason—*Oar.*

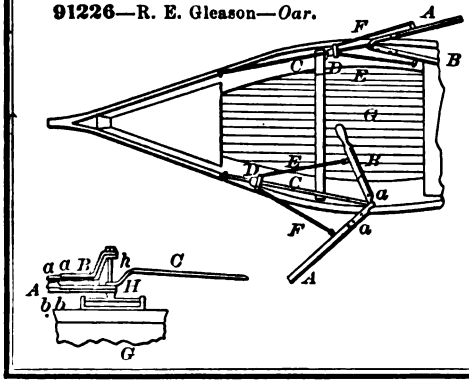

91227—A. Guinzburg—*Household Implement.*

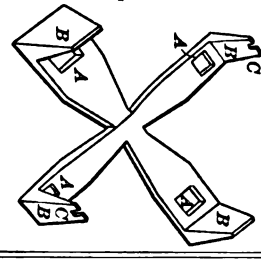

91228—J. Gunn—*For Attaching Hubs to Axles.*

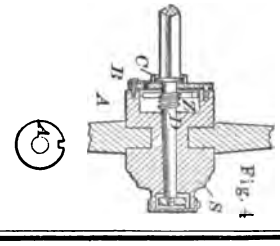

91229—Hadley & Johnson—*Cotton Combing Machine.*

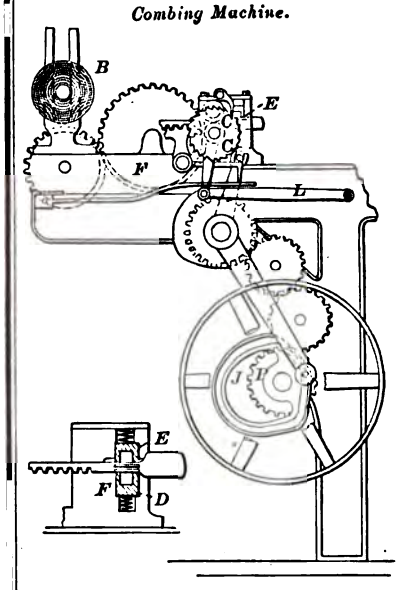

91231—Hepburn & Reiner—*Stove Drum.*

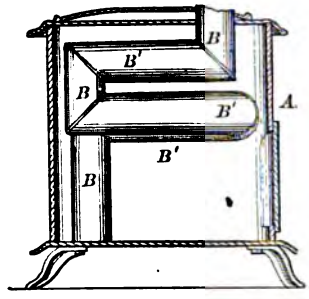

91232—S. Hill—*Settee.*

91234—J. W. Hyatt, Jr.—*Dominos.*

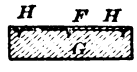

91233—J. W. Hyatt, Jr.—*Checker Men.*

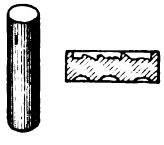

91230—J. A. Hummon—*Whiffletree Hook.*

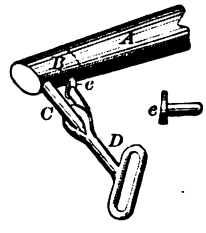

91235—J. W. Hyatt, Jr.—*Dominos.*

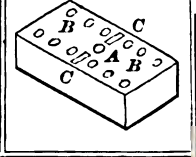

91236—J. N. Jackson—*For Loading Locomotive Tenders.*

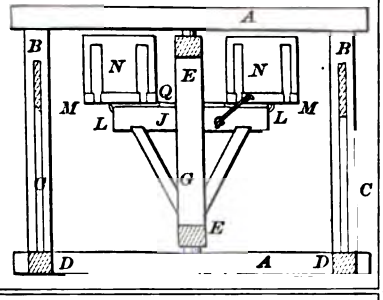

91237—J. Jorey—*Horse Shoe Calk.*

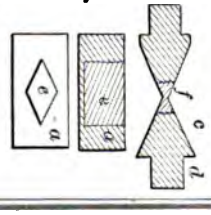

91238—C. Lehman—*For Peeling Fruit.*

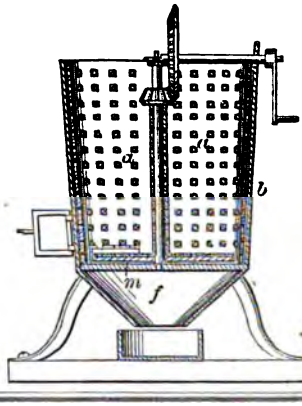

91239—W. Lehmann—*Hot Air Engine.*

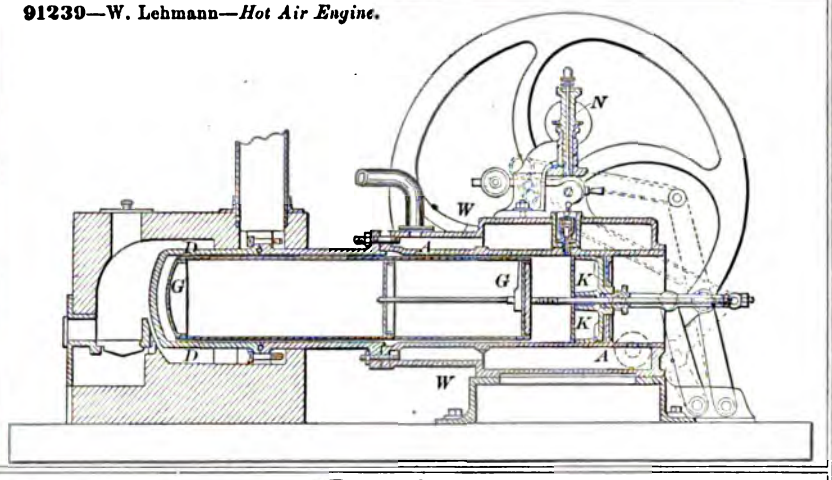

91240—G. Little—*For Perforating Paper for Telegraphing.*

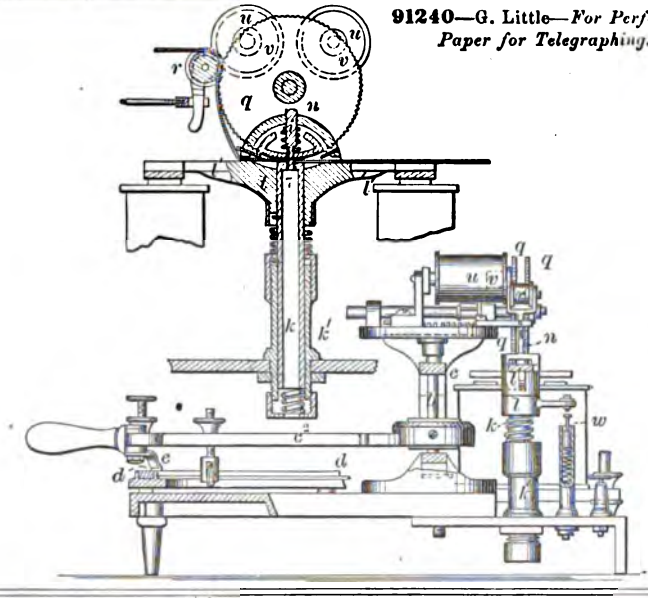

91241—G. Little—*For Perforating Paper Automatic Transmitters.*

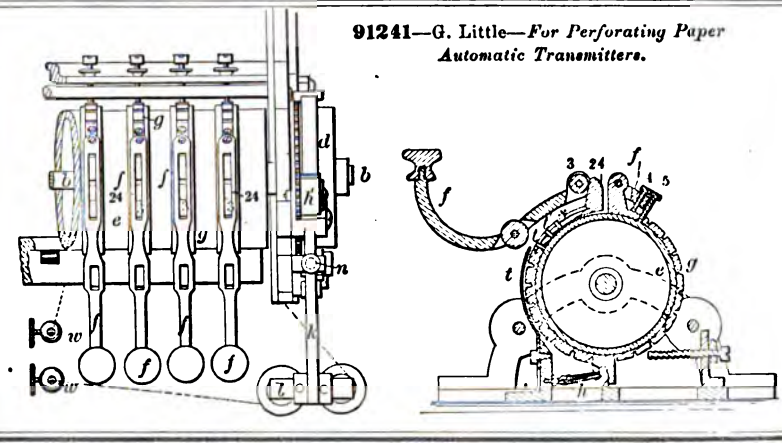

91242—A. W. Lozier—*Hay Loader.*

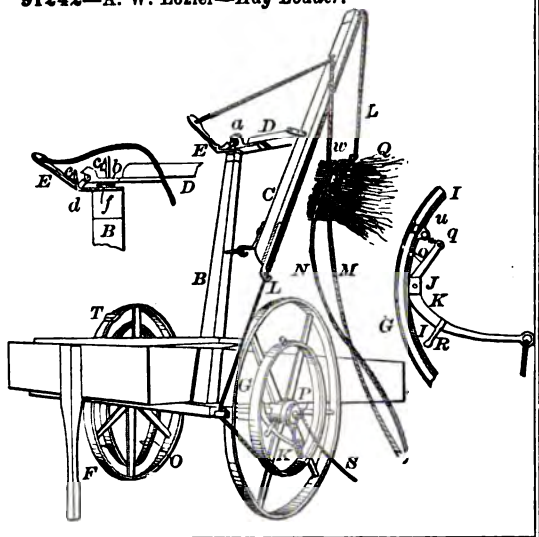

91244—S. C. Maine—*Cabinet Bedstead.*

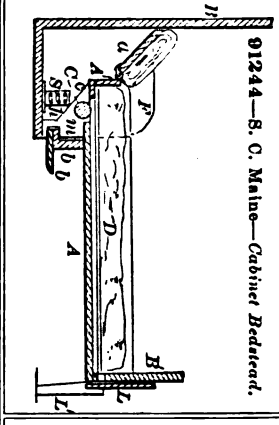

91245—H. Mallory—*Stove Damper.*

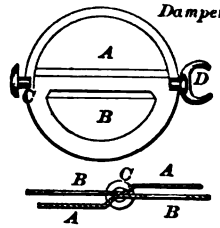

91247—C. Mason—*Steam Generator.*

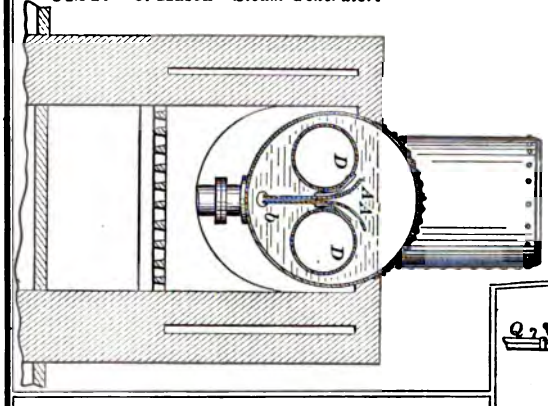

91243—A. W. Lozier—*Hay Rake and Loader.*

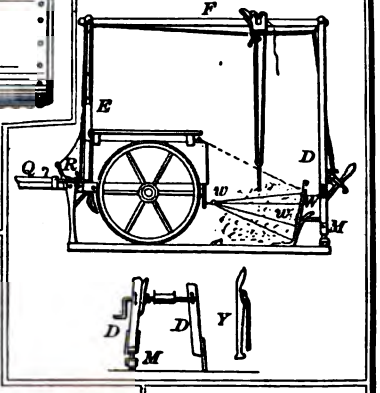

91246—J. P. Manny—*Harvester.*

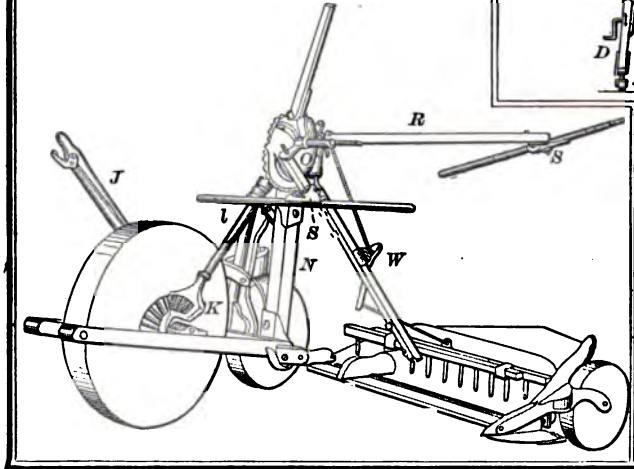

91250—A. McMullin—*Piston Packing.*

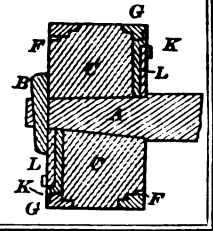

91248—Mays & Bliss—*For Manufacturing Metal Cans.*

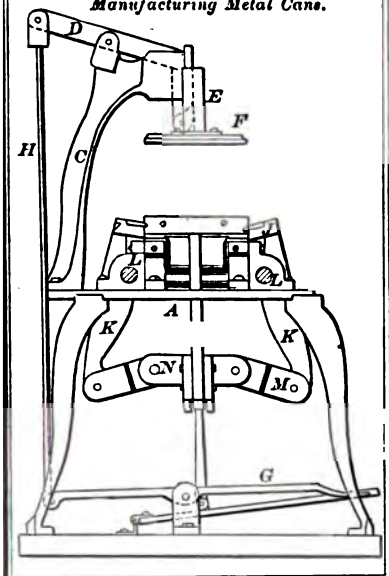

91251—H. Merriman—*Mechanical Movement.*

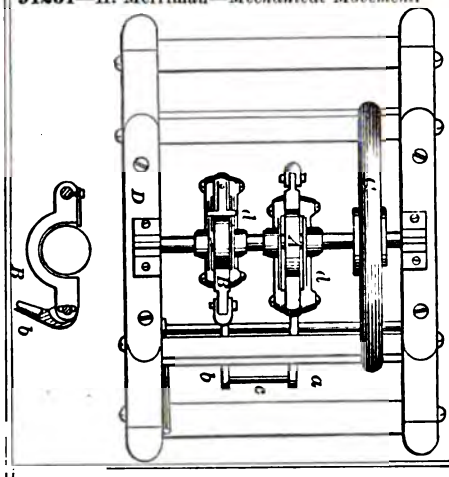

91249—J. R. McGinness—*Cartridge Box.*

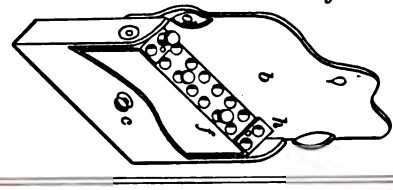

91252—J. Metzgar—*For Bending Tires.*

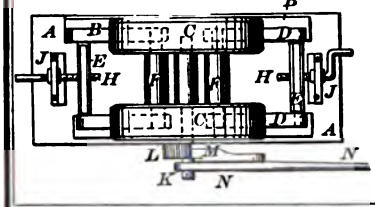

91253—Miller & Jageler—*Ice Velocipede.*

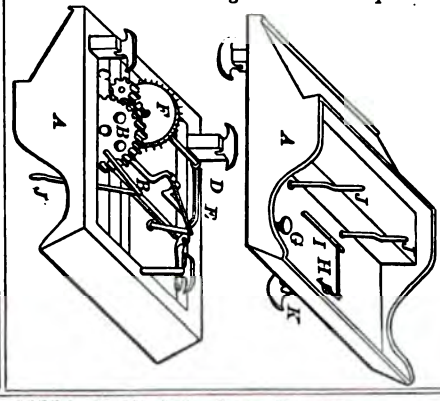

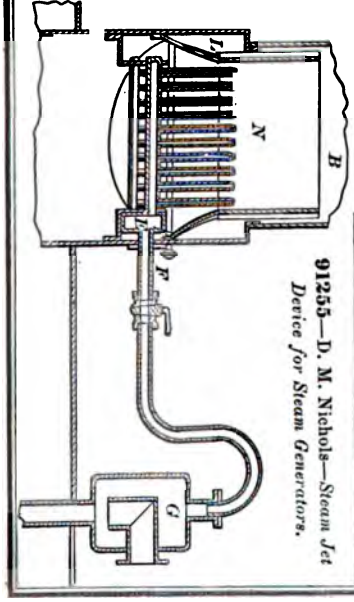

91255—D. M. Nichols—*Steam Jet Device for Steam Generators.*

91254—R. Mitchell—*Steam Generator.*

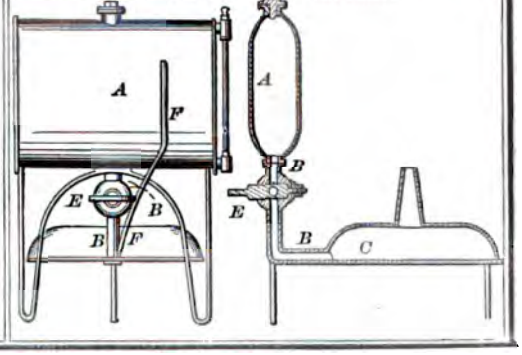

91256—T. Nutting—*Fruit Picker.*

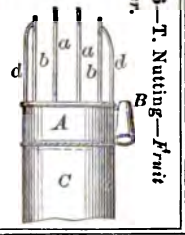

91257—G. Oerllein—*Threshing Machine.*

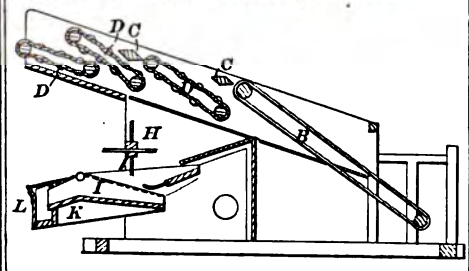

91258—Paddington & Crew—*Hames Strap.*

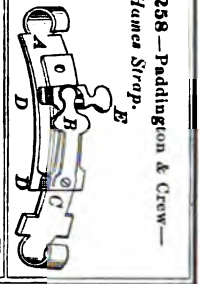

91259—T. Payne—*Bed Bottom.*

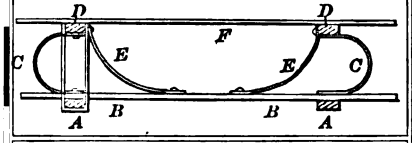

91260—J. S. Perry—*Store.*

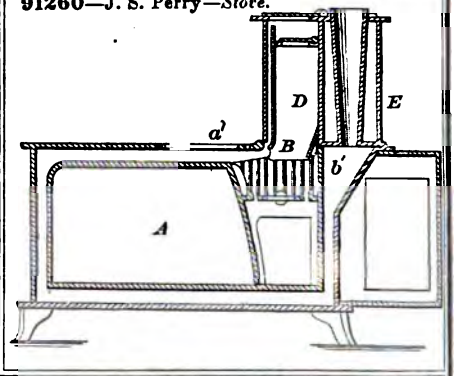

91261—C. F. Pierce—*Safety Attachment for Breastpins.*

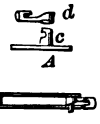

91262—Plamandan & Maher—*Grain Sieve.*

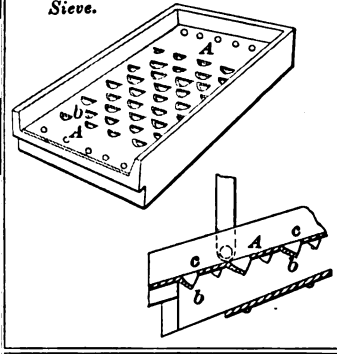

91263—G. Pugh—*Lamp.*

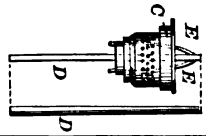

91264—Race & Whitney—*For Measuring and Winding Cloth, &c.*

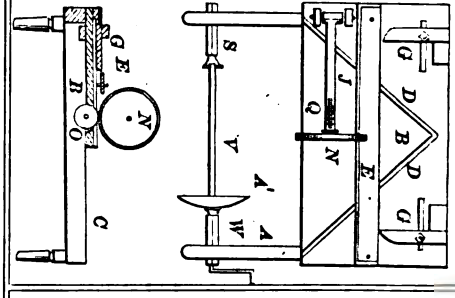

91265—J. S. Rankin—*Uterine Supporter.*

91266—Redfield & Hubbard—*Beehive.*

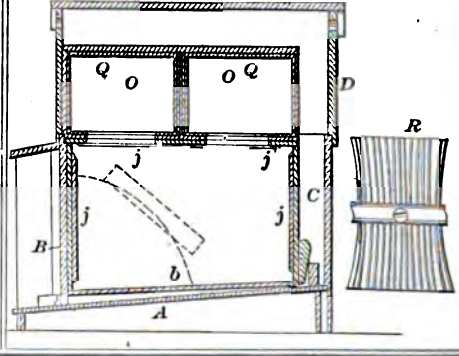

91267—J. Repetti—*For Making Lead Shavings.*

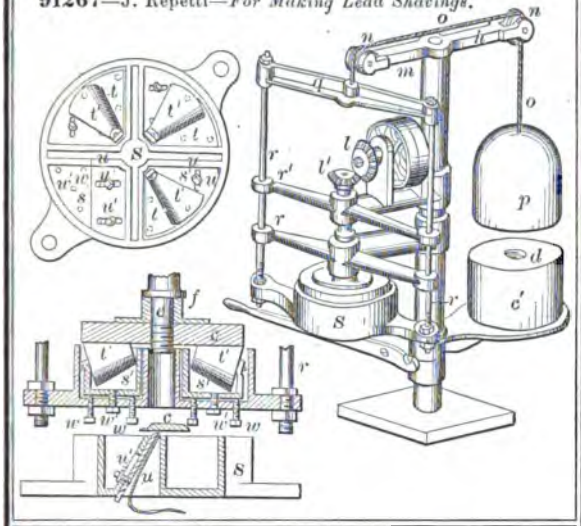

91268—A. S. Richards—*Paper File.*

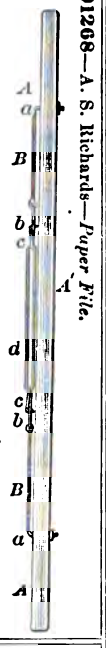

91271—X. Robert—*For Recutting Files.*

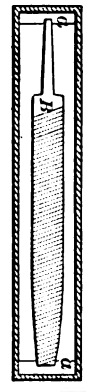

91272—A. Robira—*Syringe for Destroying Cotton Plant Worms.*

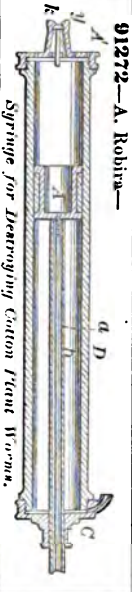

91269—Richards & Curtiss—*Cutter Head.*

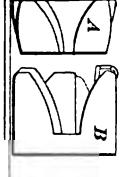

91270—H. Richmann—*Grain Separator.*

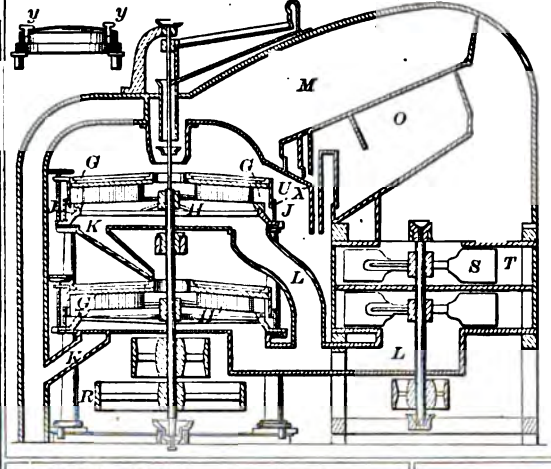

91273—M. E. Russell—*Meat Chopper.*

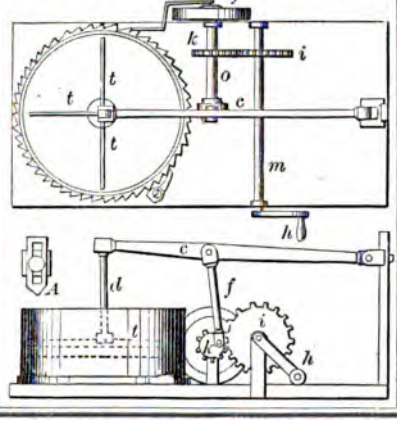

91274—S. T. Savage—*Coffee Pot.*

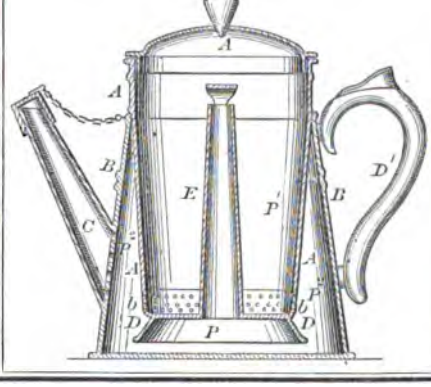

91275—A. C. Schwanke—*Stove.*

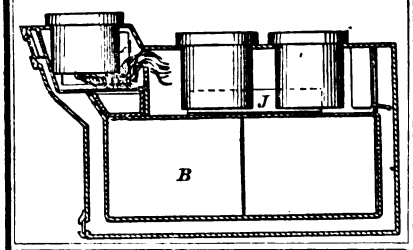

91277—C. L. Sholes—*Paging Machine.*

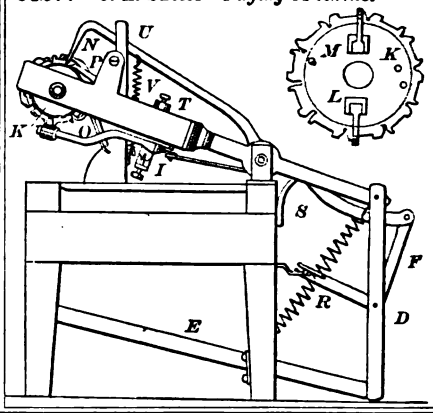

91276—Seymour & Perkins—*Percussion Cap Holder*

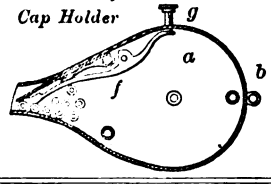

91279—W. B. Smith—*Furnace for Shrinking on and Removing Tires.*

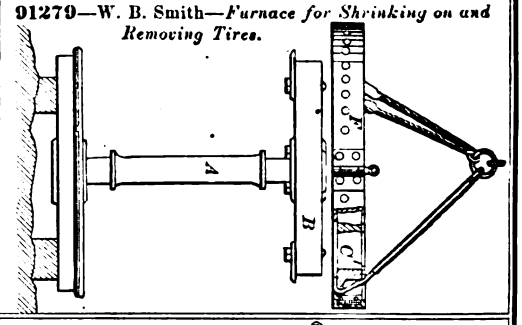

91280—Spalding & Southwell—*Thill Coupling.*

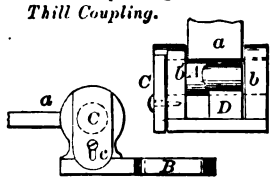

91282—O. O. Sturle—*Grain Binder.*

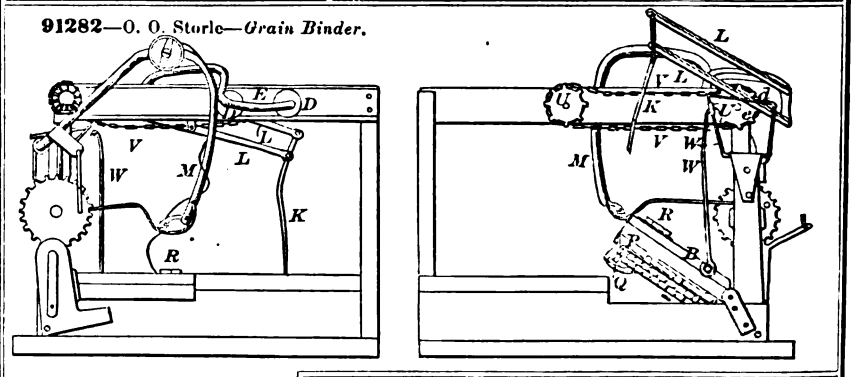

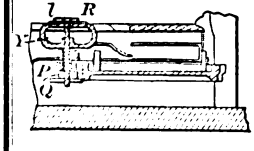

91281—E. M. Stevens—*For Rounding up Boot and Shoe Soles.*

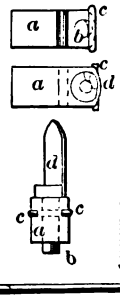

91283—H. D. Stover—*Hoisting Apparatus.*

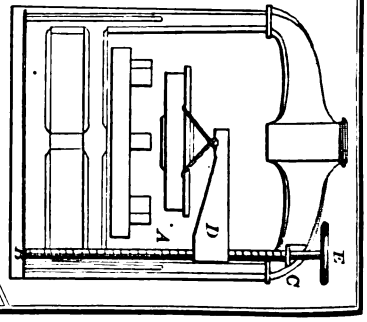

91278—D. Smith—*Cartridge.*

91284—H. P. Straub—*Millstone Pick.*

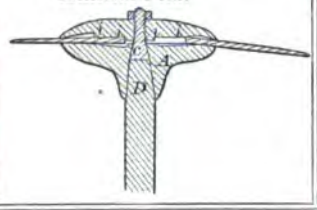

91285—J. B. Sulgrove—*Sewing Machine Corder.*

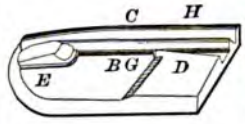

91286—J. Temple—*For Paring Horses' Hoofs.*

91287—J. M. Thatcher—*Fireplace Heater.*

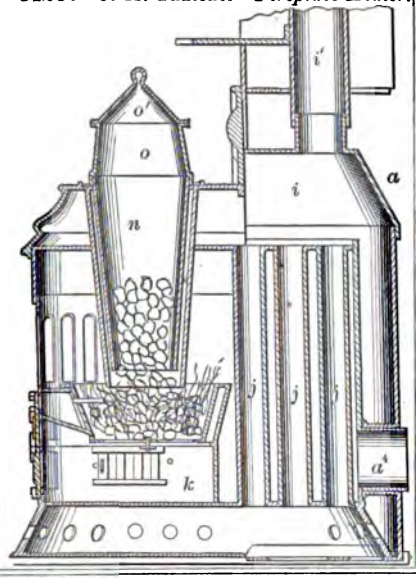

91289—F. Walton—*Constructing Houses.*

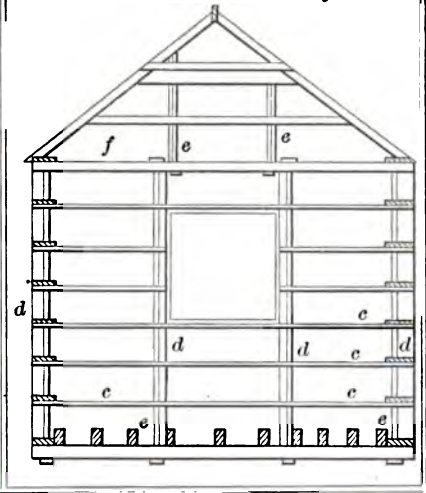

91288—A. S. Upson—*For Making Metallic Nuts.*

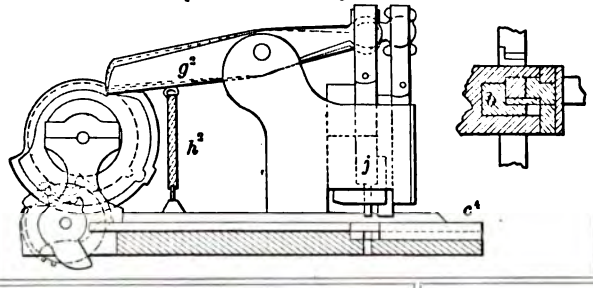

91291—F. R. Wegman—*Pipe Coupling.*

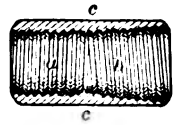

91292—G. W. Wells—*Sewing Machine Guide.*

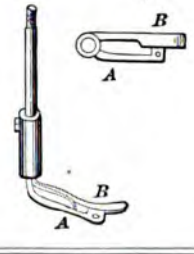

91290—I. Webster—*Jaw for Brooms.*

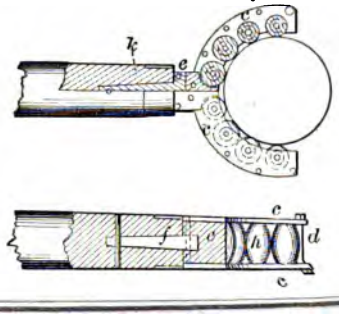

91293—J. B. West—*For Cutting Rasps.*

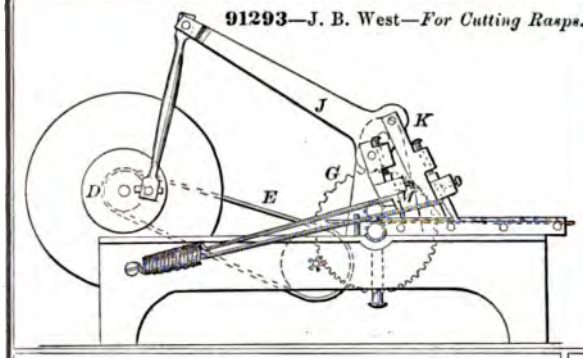

91294—I. W. Wilfong—*Steam Generator.*

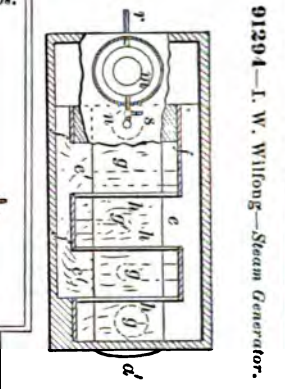

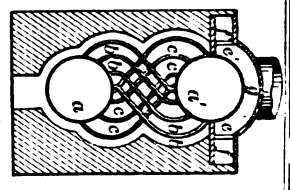

91297—D. Aaron—*Fan.*

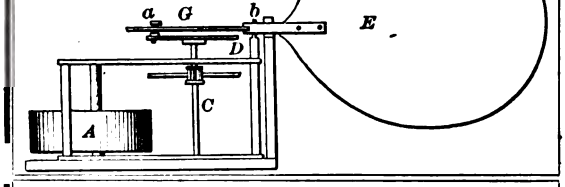

91300—F. Barnett—*Swimming Apparatus.*

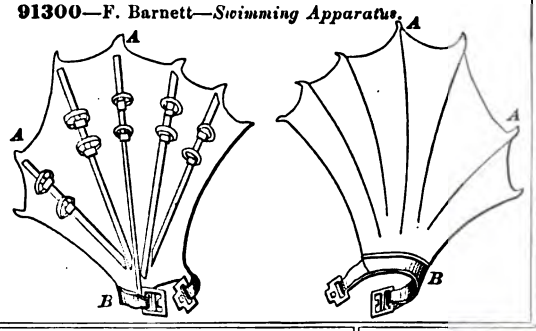

91301—S. M. Bayard—*Heating Drum.*

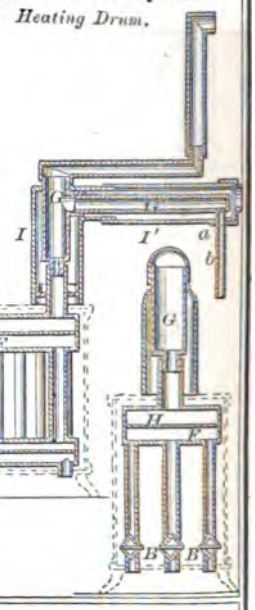

91299—T. F. Baker—*Fireplace.*

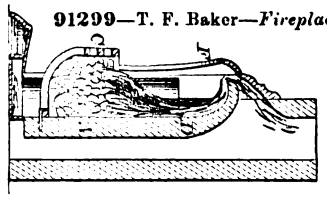

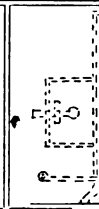

91295—A. W. Winall—*Hanging Millstones.*

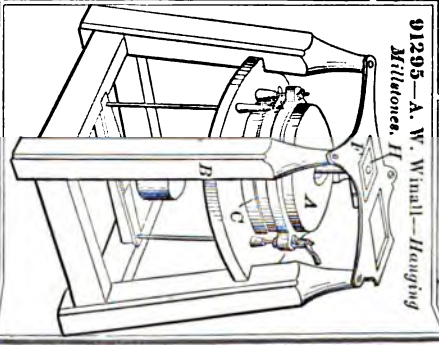

91302—H. V. Belding—*Carriage Hub.*

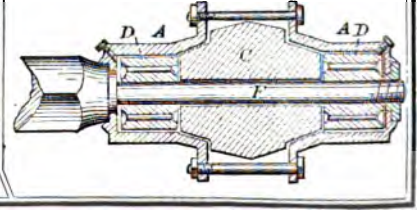

91303—I. A. Benedict—*Cultivator.*

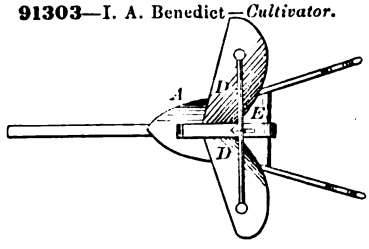

91304—J. F. Boynton—*For Extinguishing Fires.*

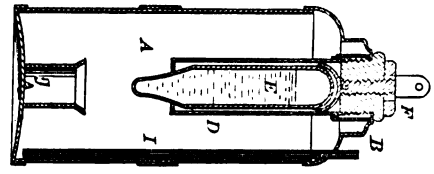

91305—P. Brooks—*Loom.*

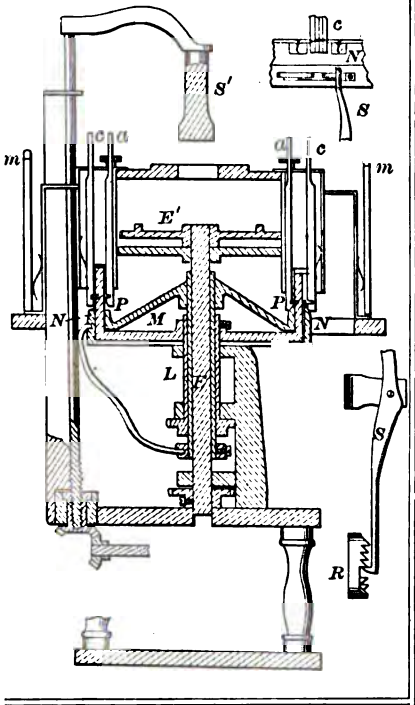

91306—Brown & Gould—*Tire Cooler.*

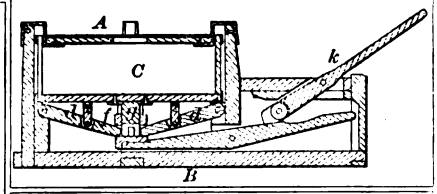

91307—L. D. Carpenter—*Grain Sieve.*

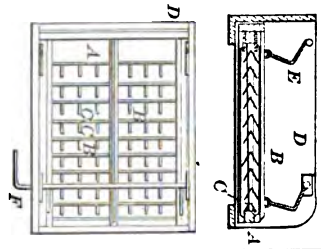

91308—L. C. Chase—*Hand Rein Fastening*

91309—O. Dean—*Vise and Drill.*

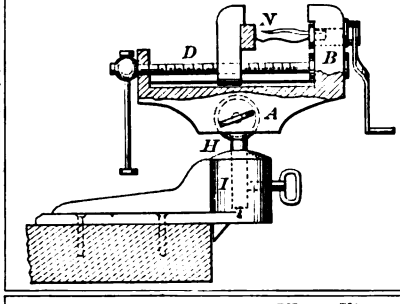

91310—D. J. De Groat—*Fence.*

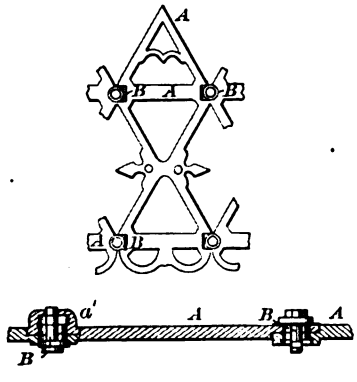

91311—G. W. Dickerson—*Water Elevator.*

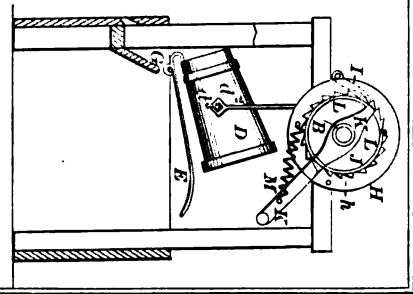

91312—J. Dickinson—*For Holding Diamonds for Dressing Stone.*

91314—W. U. Dudley—*Brush Back.*

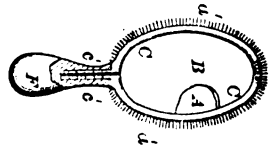

91315—J. C. Durborow—*Harvester Rake.*

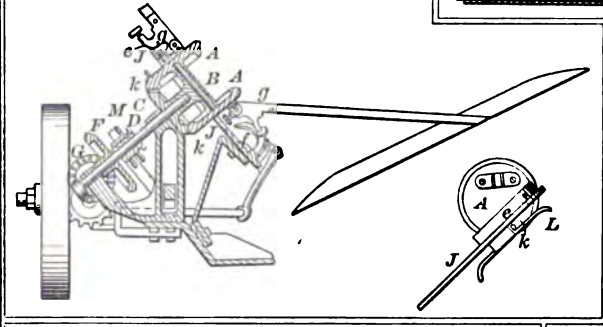

91316—J. Eaton—*Steam Generator.*

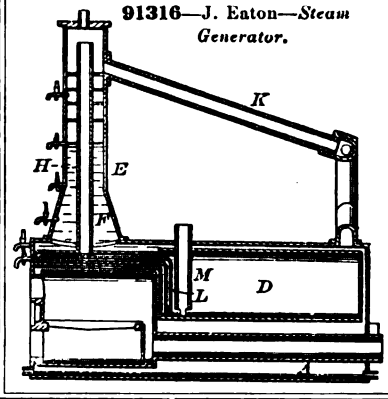

91317—Ellis & Albertson—*Hoe and Rake.*

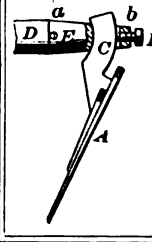

91318—M. J. Ferren—*Sewing Machine.*

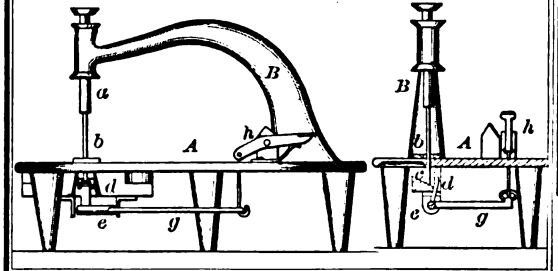

91319—J. J Fifield—*Pipe Coupling.*

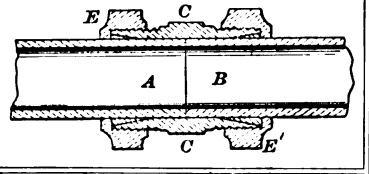

91320—J. H. Finch—*Tea and Coffee Pot.*

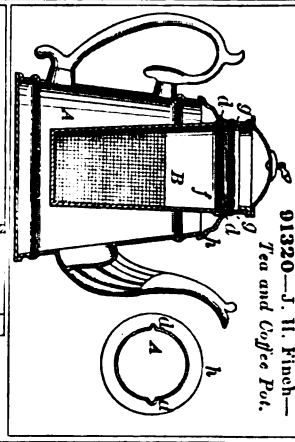

91321—J. E. Finley—*Beehive.*

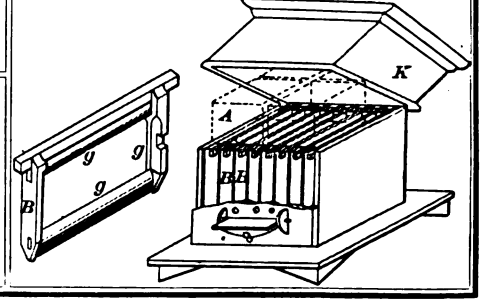

91323—D. P. Flint—*Velocipede.*

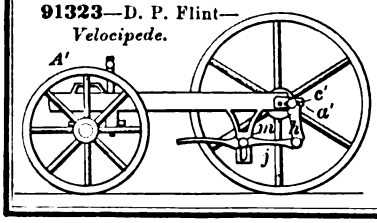

91322—D. P. Flint—*Velocipede.*

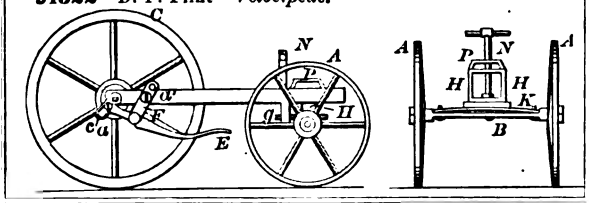

91325—J. B. Fuller—*Lamp.*

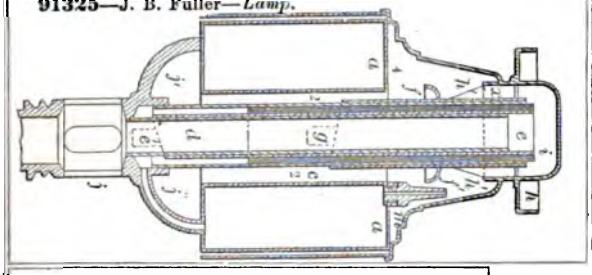

91326—J. G. Gabel—*Sash Cord Fastening.*

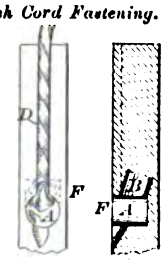

91329—B. J. Greely—*Ash Sifter.*

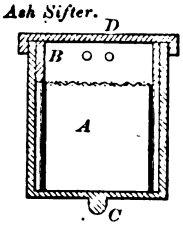

91327—Garcin & Adams—*For Driving Sewing Machines.*

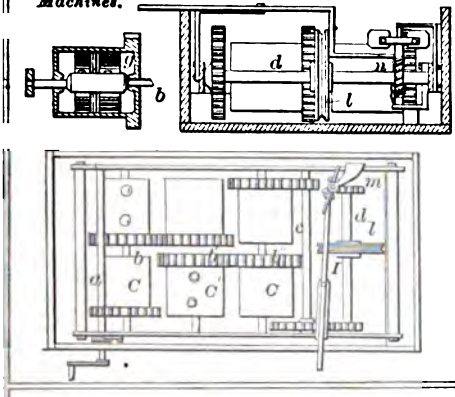

91330—A. Greenman—*Fruit Stand.*

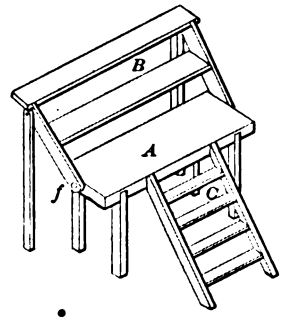

91328—S. T. Godfrey—*Plow.*

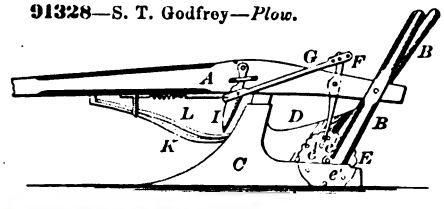

91331—G. P. Hachenberg—*Envelope*

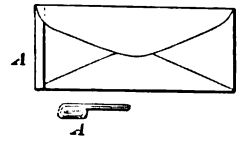

91334—J. C. Hempel—*Diaper.*

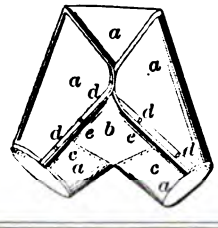

91332—F. Hamblin—*Extension Table.*

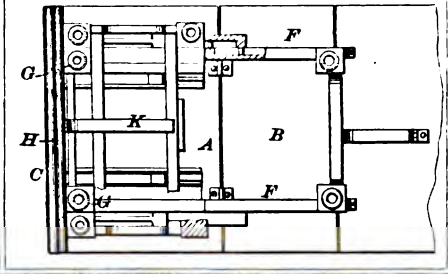

91333—Heiss & Schmidt—*Coffee and Tea Pot.*

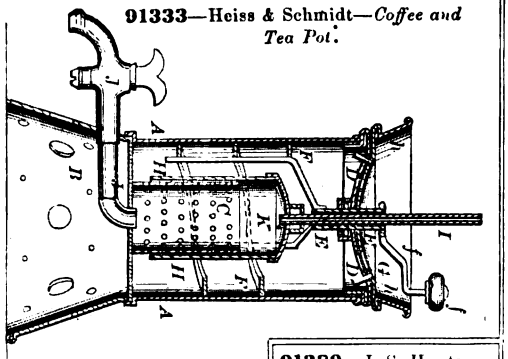

91335—T. Holmes—*Revolving Dough Mixer.*

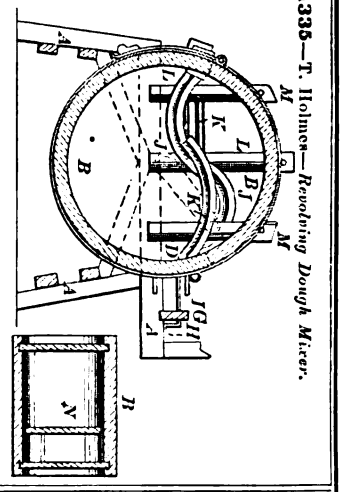

91339—J. S. Hunter—*Railway Rail.*

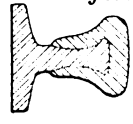

91338—R. Hunt—*Water Wheel.*

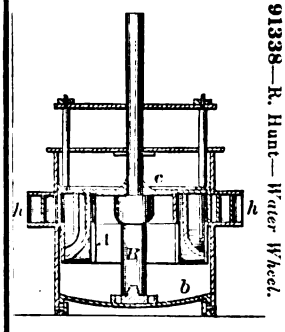

91340—C. S. Hutchins—*Line Holder.*

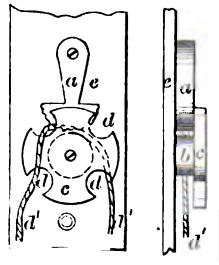

91336—E. W. Hopkins—*Milking Stool.*

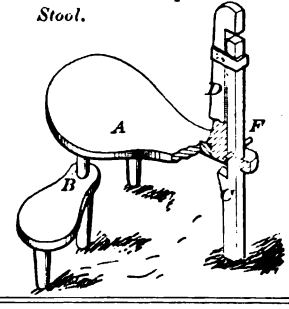

91342—G. H. Ireland—*Safe.*

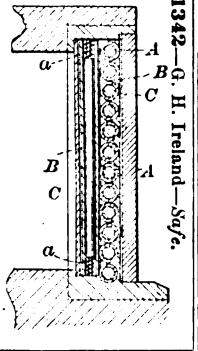

91337—W. H. Howland—*Steam Engine Stop Valve.*

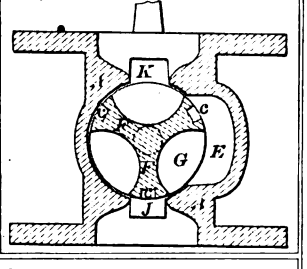

91343—A. P. Jackson—*Homing Mill Burr.*

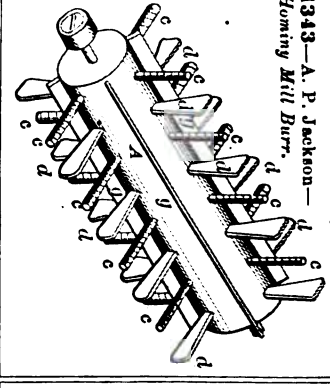

91344—D. W. Keefer—*Fence.*

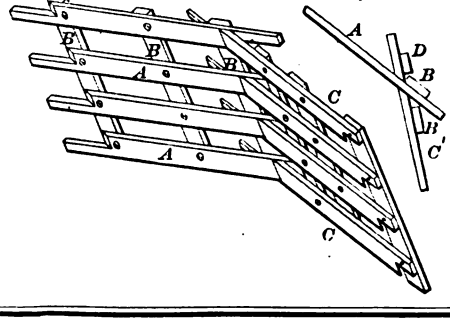

91346—S. Kepner—*For Detaching Horses.*

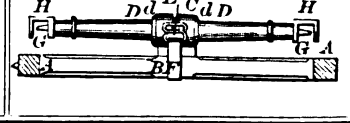

91345—J. R. Kelso—*Gun Carriage.*

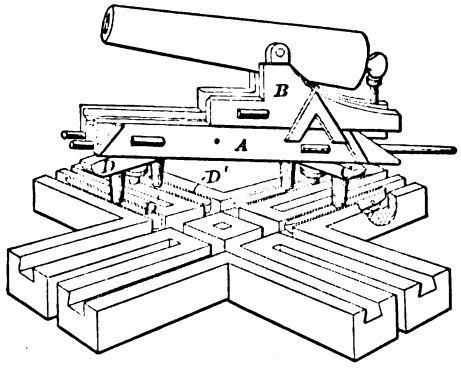

91350—J. Lee—*Child's Chair and Carriage.*

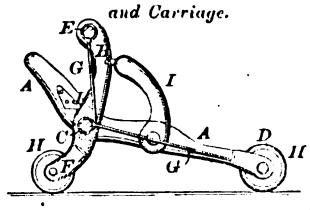

91351—J. M. Lemon—*Conveyor F "Flight."*

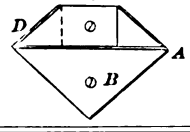

91347—J. Kershaw—*Harvester.*

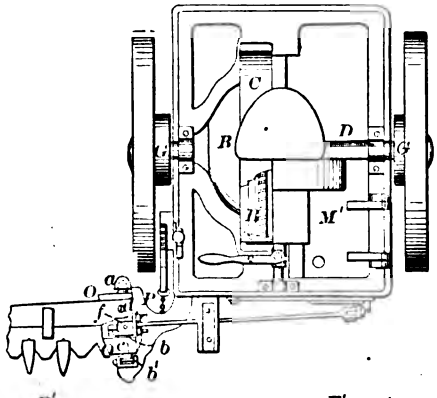

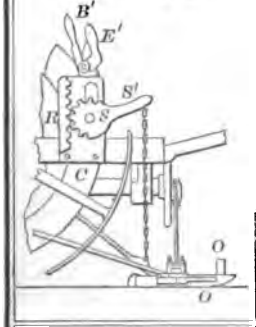

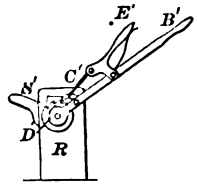

91352—S. Lewis—*Rock Drill.*

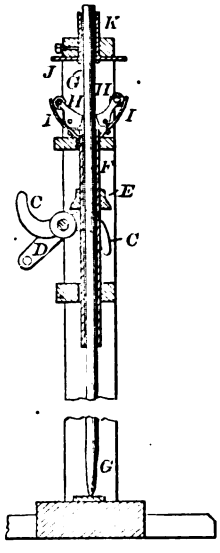

91348—J. Killefer—*For Threading Bolts and Nuts.*

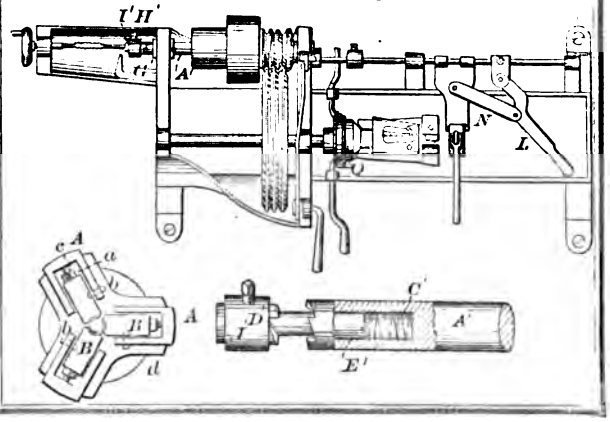

91349—F. Kutscher—*Bottle Stopper.*

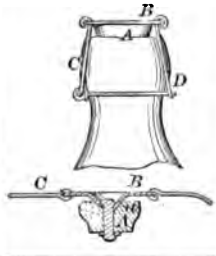

91353—C. Lockwood—*Sand Screen.*

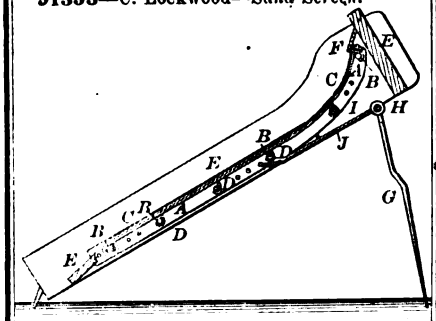

91354—J. Long—*Plow.*

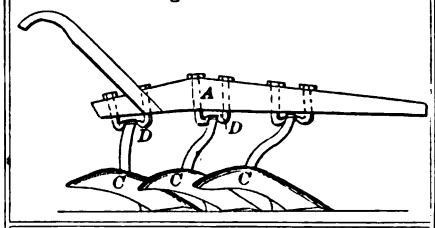

91360—J. L. Nettleton—*Churn.*

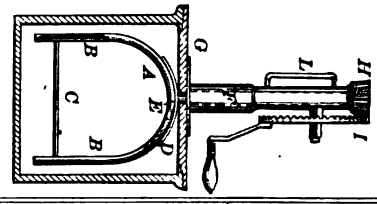

91357—G. Mayer—*Stove.*

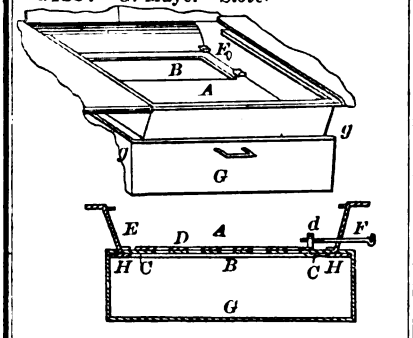

91355—J. Mallett—*Wool Table.*

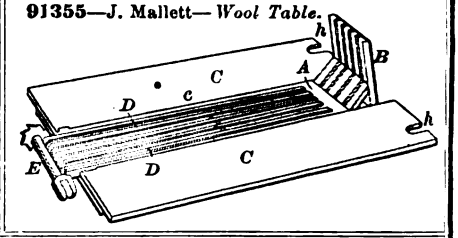

91356—C. Marcher—*Spittoon Footstool.*

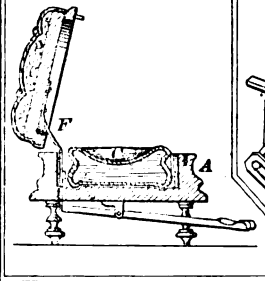

91359—J. H. Morse—*Lock.*

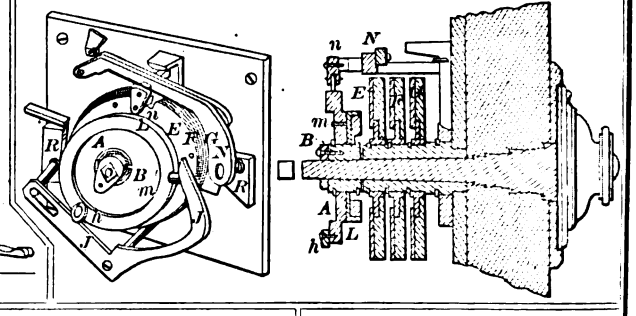

91358—J. M. Mayer—*Brick Truck.*

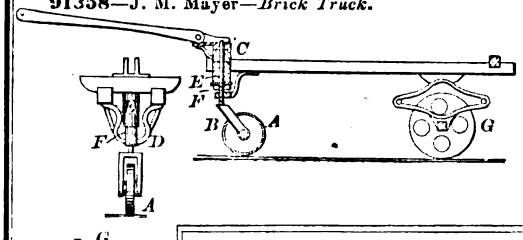

91362—S. P. Parmly—*Bag Fastener.*

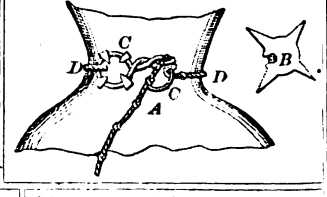

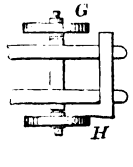

91361—T. Campbell—*Cotton Bale Tie.*

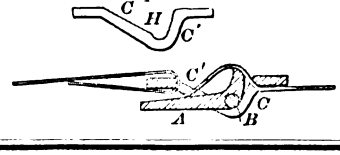

91364—S. H. Pearce—*Mosaic Floor Covering.*

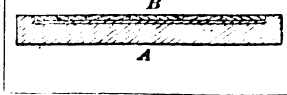

91363—H. Pattison—*Animal Trap.*

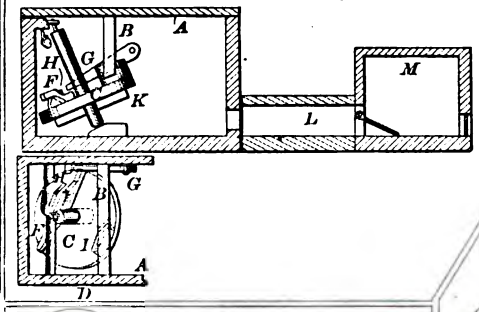

91366—L. M. Platt—*Car Duster.*

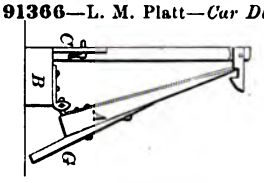

91368—F. Roebow—*Steam Engine Valve and Opening.*

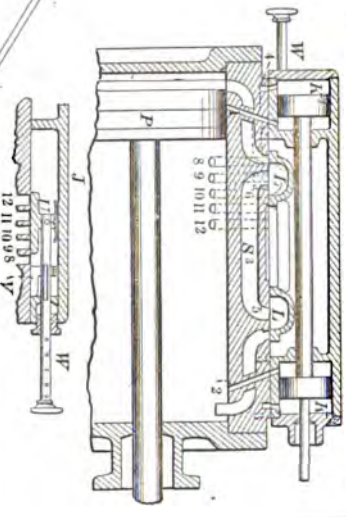

91365—M. Perl—*For Destroying Worms on Cotton Plants.*

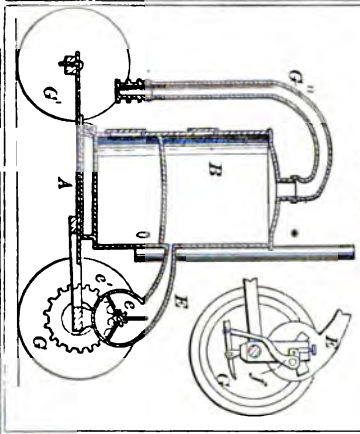

91367—J. C. Richardson—*Fork Blank.*

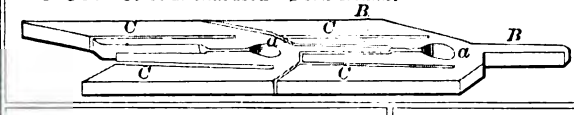

91369—J. B. Sargent—*Cabinet Hook.*

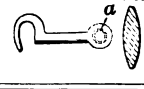

91370—J. A. Sevey—*For Rounding Whalebone for Corsets.*

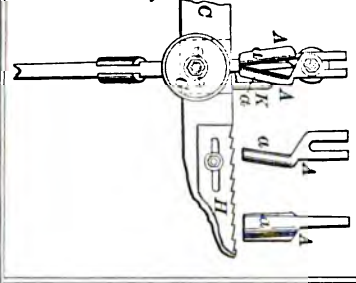

91371—R. M. Seldis—*Fur Collar.*

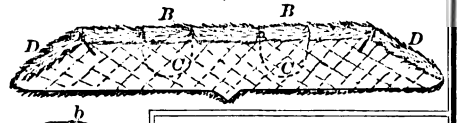

91374—J. P. Smith—*Liquid Meter.*

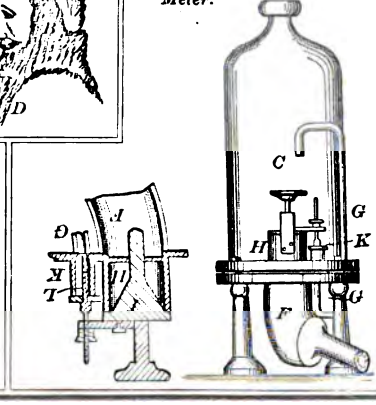

91372—J. C. Sherwood—*Milk Cooler.*

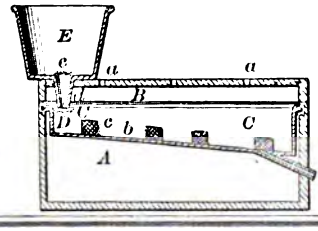

91375—S. P. Snead—*Fireproof Ceiling.*

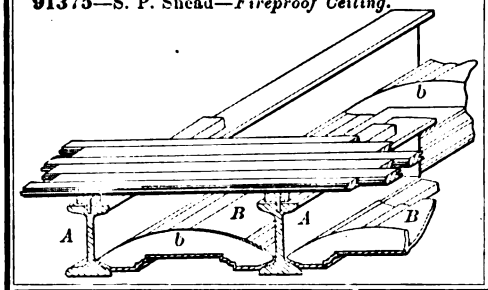

91376—J. H. Snow—*Gas Regulator for Blow Pipes.*

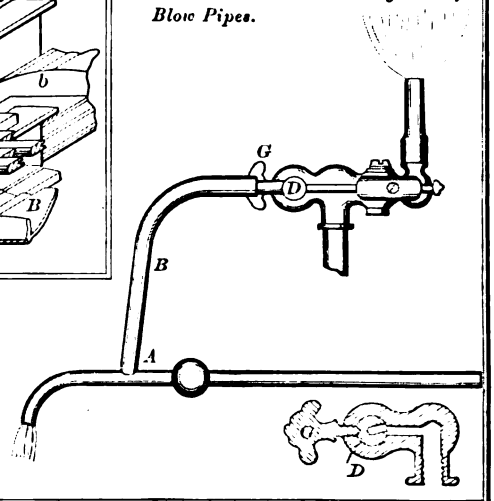

91380—A. & P. Staffer—*Saw Gummer.*

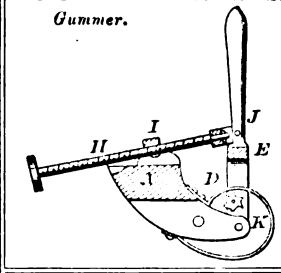

91379—Spofford & Raffington—*Velocipede.*

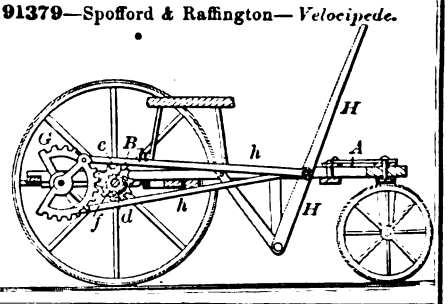

91381—A. & P. Staffer—*Flour Cooler.*

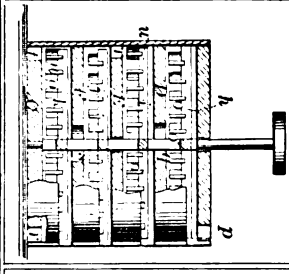

91382—Stern & Seldis—*Muff.*

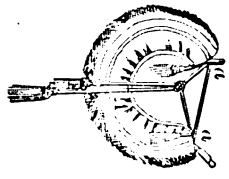

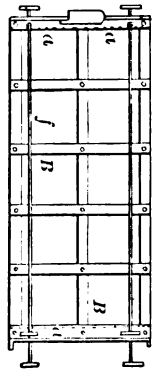

91383—L. Stewart—*Steam Plow.*

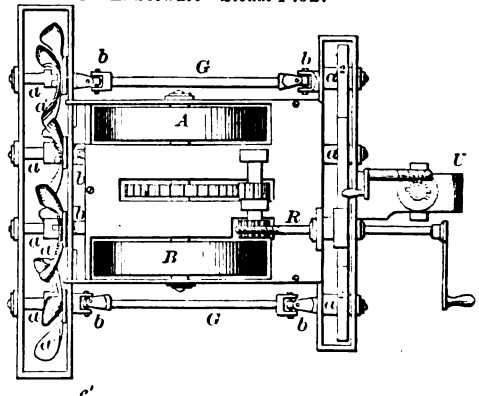

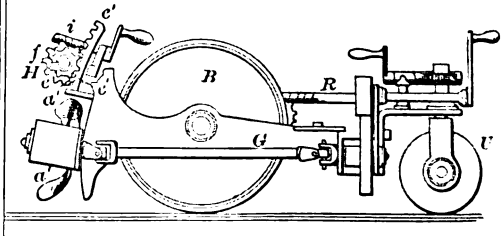

91384—S. Sykes—*Sawdust Feeder for Furnaces.*

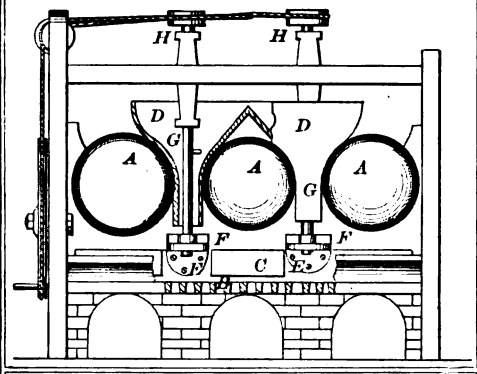

91385—M. J. Trowbridge—*Centre Square.*

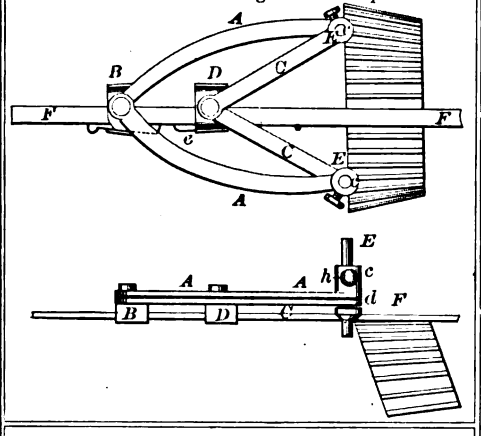

91386—R. B. Tunstall—*Seeder.*

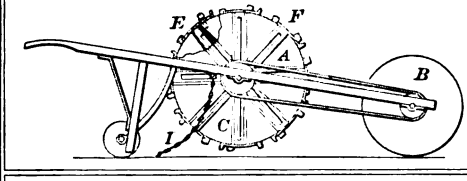

91394—A. F. Whiting—*Knob Latch.*

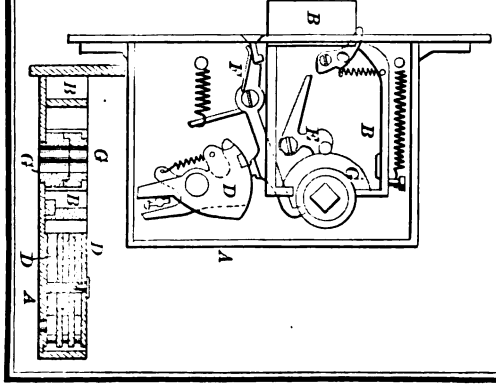

91387—A. Vaughan—*Post Auger.*

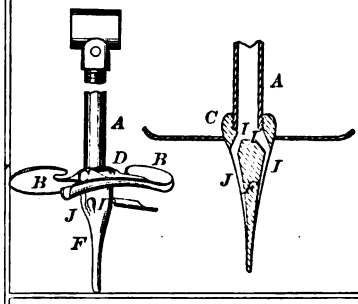

91388—A. Wadsworth—*Watch.*

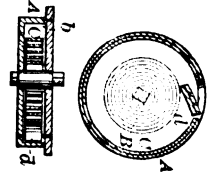

91389—J. H. Weeden—*Head Rest for Pews.*

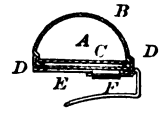

91390—J. Welker—*Trace Buckle.*

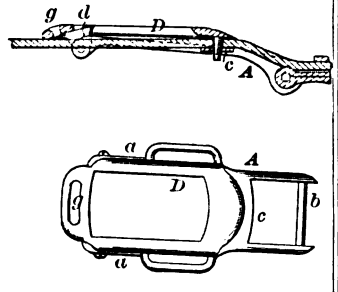

91392—E. S. Wheeler—*Carpet Stretcher and Nailer.*

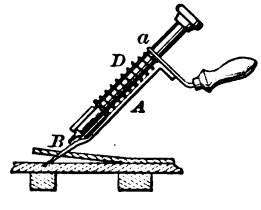

91391—J. Wettstein—*Tobacco Rolling Machine.*

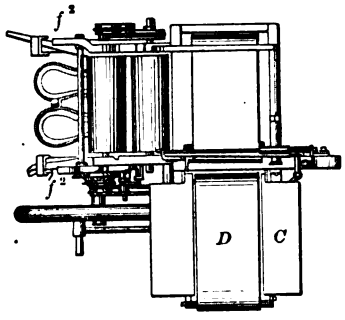

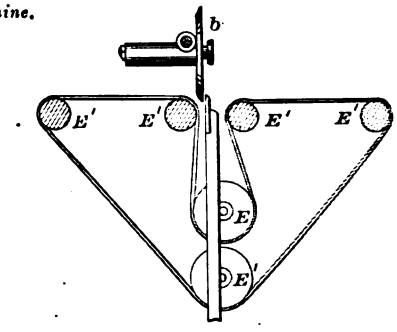

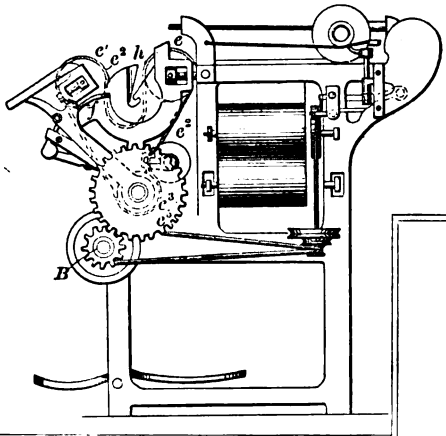

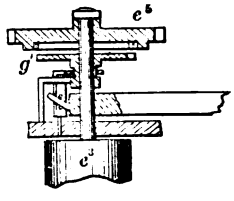

91395—H. Whittingham—*Steam Generator.*

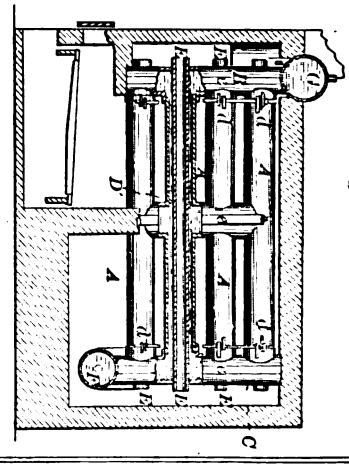

91396—F. L. Wickham—*Washing Machine.*

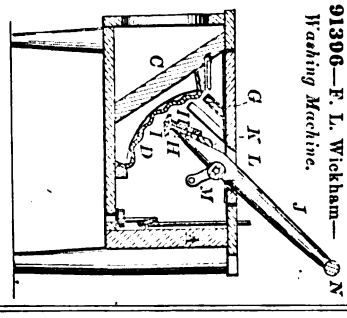

91397—C. P. Wing—*Table Leaf Support.*

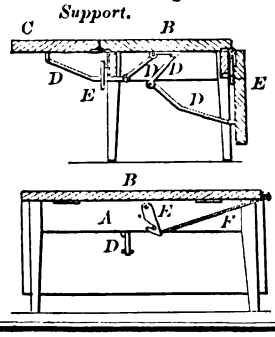

91398—J. C. Wirtz—*Velocipede.*

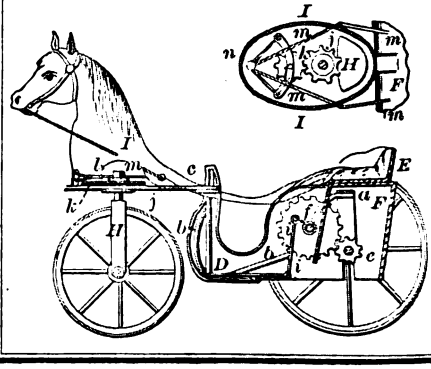

91399—G. H. Wood—*Corn Planter.*

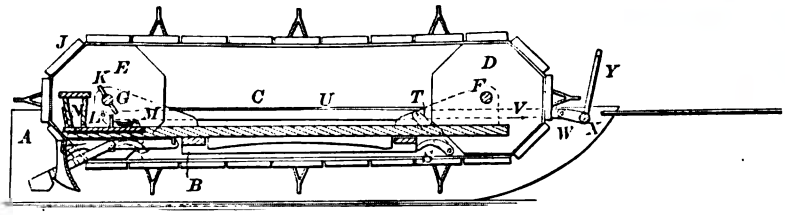

91400—J. Wright—*Punch.*

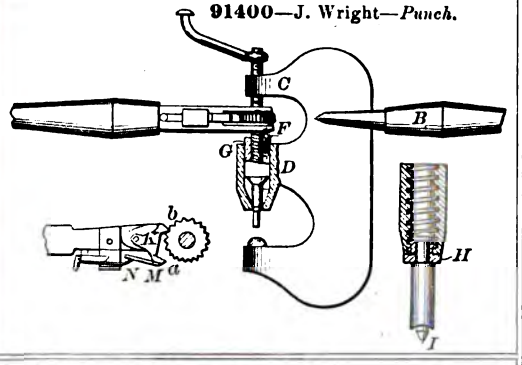

91401—A. Adams—*Harvester Rake.*

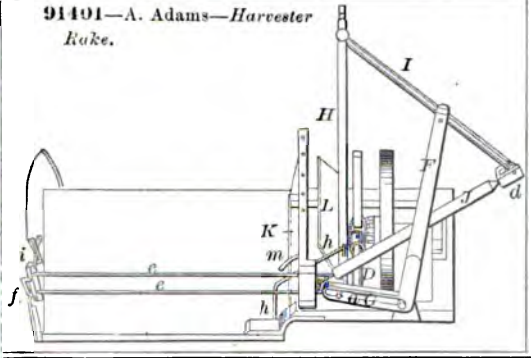

91402—H. W. Adams—*For Tanning Hides.*

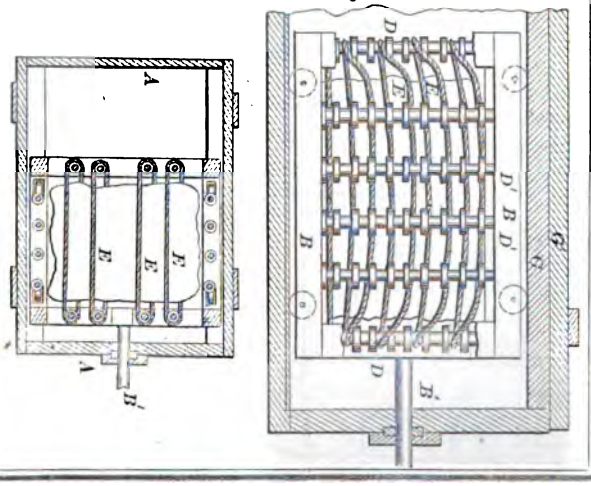

91403—J. H. Adams—*Circular Saw Mill.*

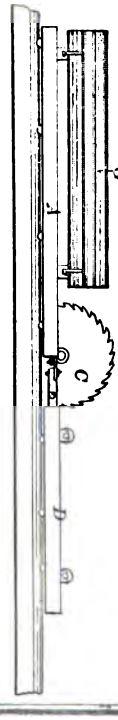

91405—J. Bachelder—*Necktie.*

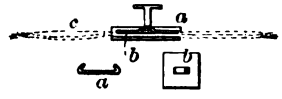

91406—J. Bachelder—*Necktie Fastening.*

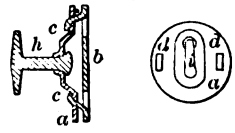

91404—A. M. Allen—*Car Brake.*

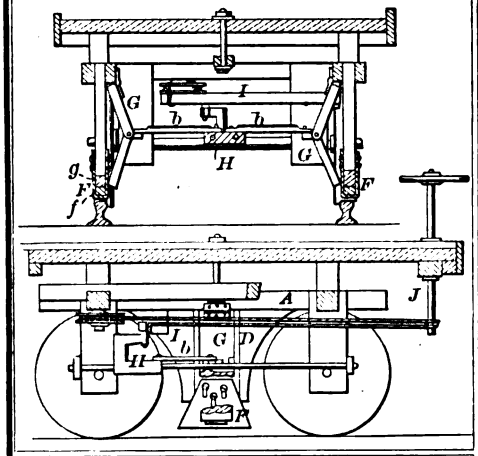

91410—M. T. Boult—*For Carving and Ornamenting Wood Work.*

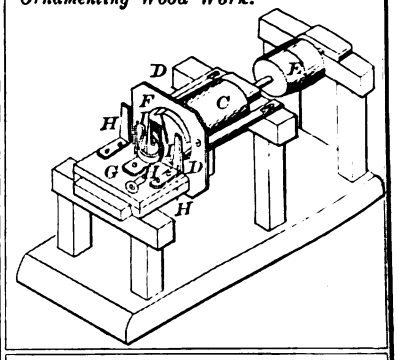

91409—W. E. Beames—*Cabinet for Dressing Bureaus.*

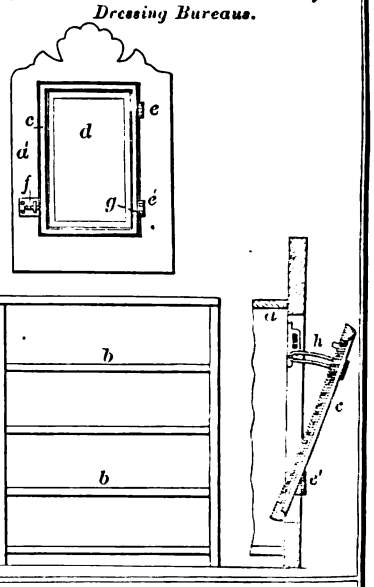

91413—C. Burley—*Safety Valve.*

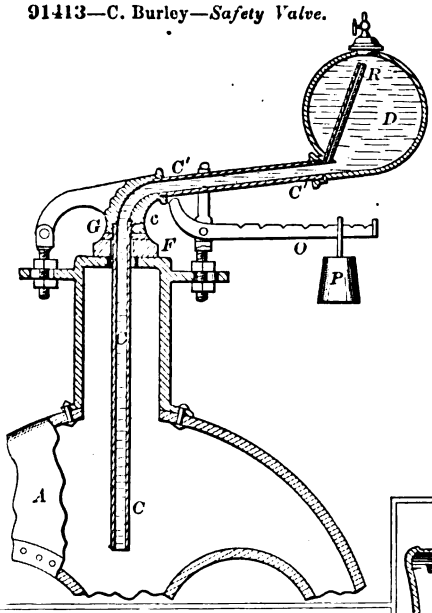

91411—J. F. Boynton—*Fire Extinguisher.*

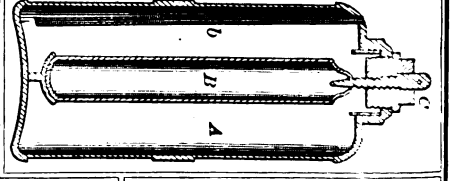

91412—A. & H. K. Burkholder—*Grain Separator.*

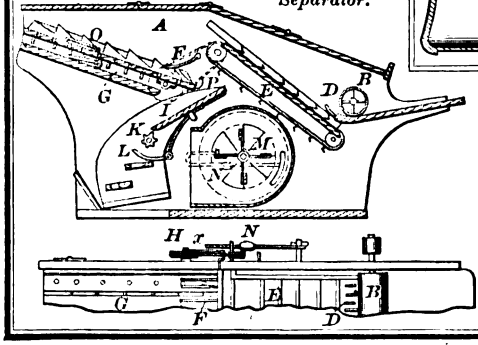

91414—Campbell & Miller—*Glueing Hopper.*

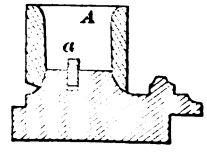

91415—H. Carrier—*Potato Digger.*

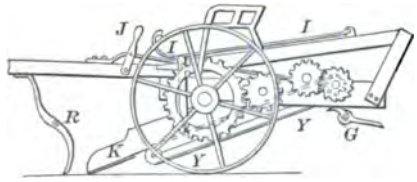

91420—M. Clark—*Corn Stalk Cutter.*

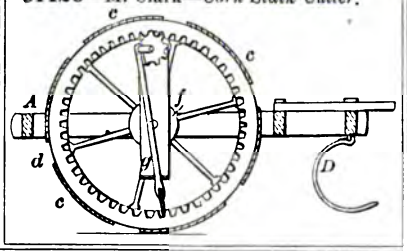

91418—J. F. Chase—*Hoop Skirt.*

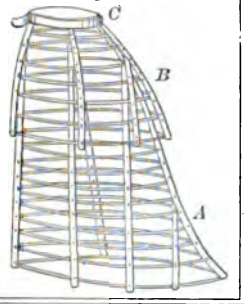

91417—A. Cary—*For Making Compound Telegraph Wire.*

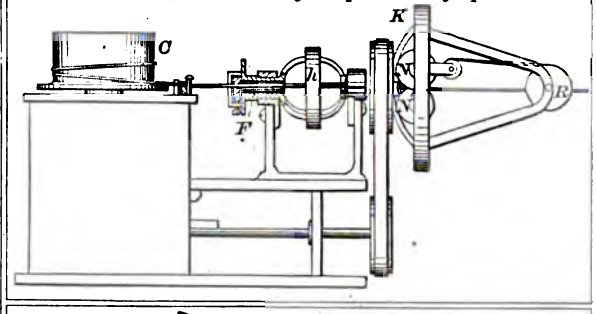

91421—L. Conroy—*Fire Arm.*

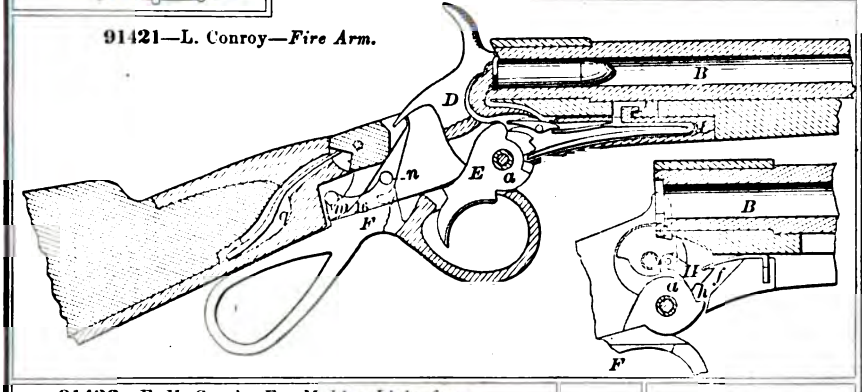

91423—E. H. Covel—*For Making Light from Hydro-Carbon Liquids.*

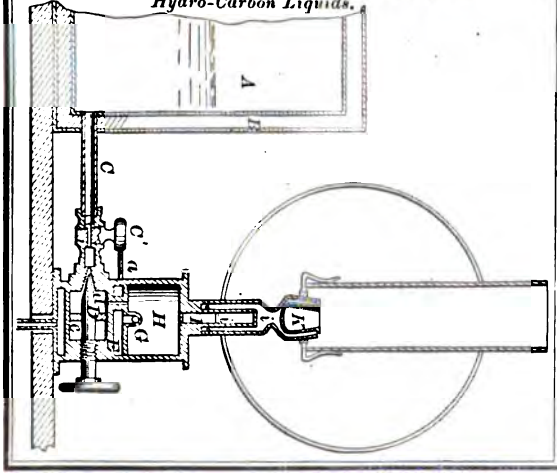

91416—A. Cary—*Telegraph Wire.*

91419—F. Chillingworth—*Cartridge Box.*

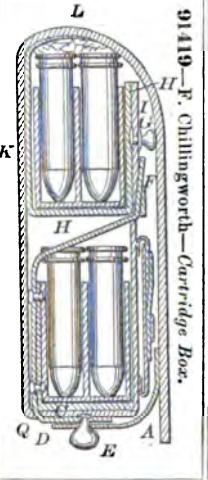

91422—H. T. Cooper—*Curtain Fixture.*

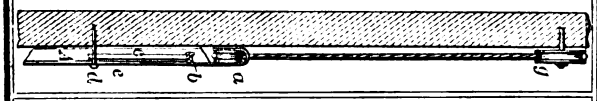

91425—J. S. H. Dickinson—*Harness Tug.*

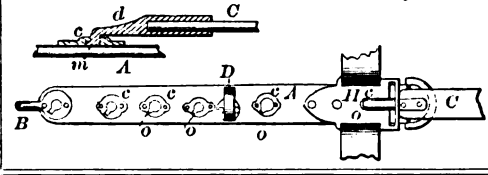

91429—N. B. Forrest—*Match Boxing Machine.*

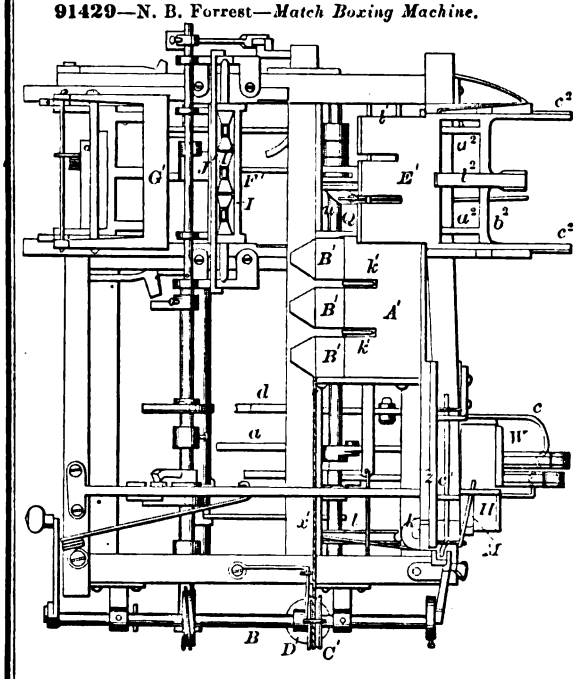

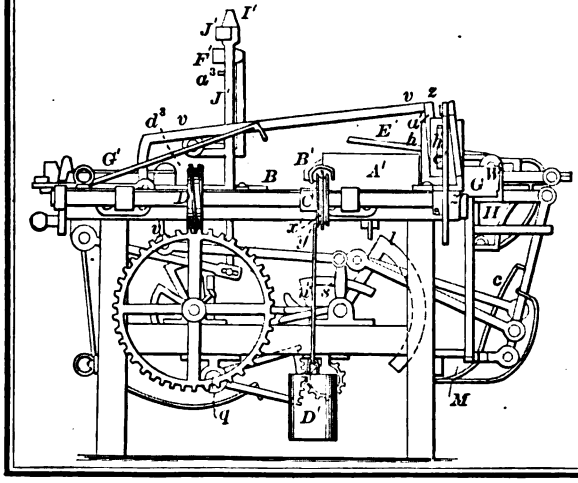

91424—D. M. Cummings—*Car Axle.*

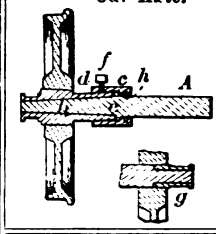

91420—J. Fanning—*Mould for Casting Solder.*

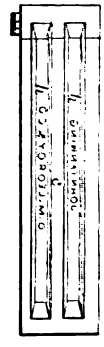

91427—A. C. Flanders—*Animal Trap.*

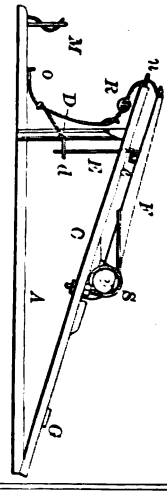

91428—J. Flint—*Saw Handle.*

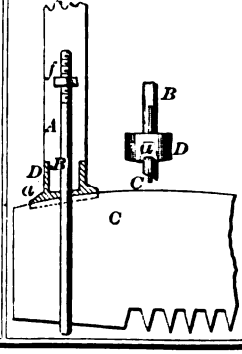

91430—T. M. Fuller—*Water Wheel.*

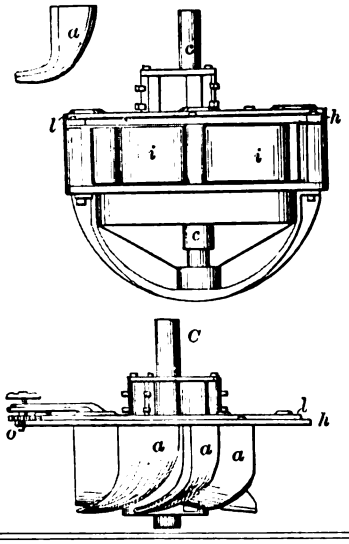

91431—J. F. Gebhart—*Loom.*

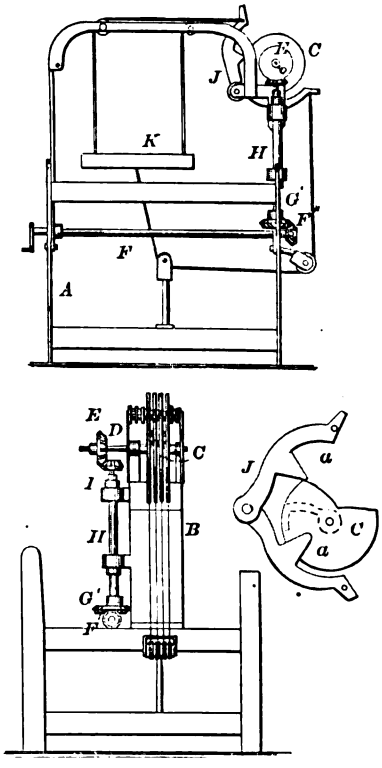

91432—A. G. Good—*For Raising and Kneading Bread.*

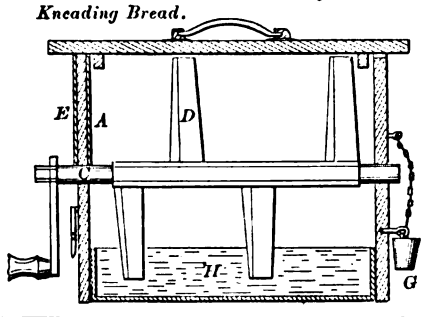

91433—C. H. Goss—*Laundry Heater.*

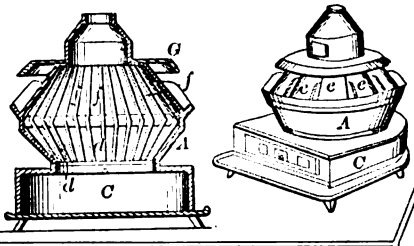

91434—J. D. Coxwell—*Guano Distributor.*

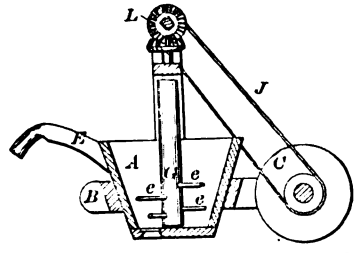

91435—J. A. Green—*Attaching Rubber Tires to Wheels.*

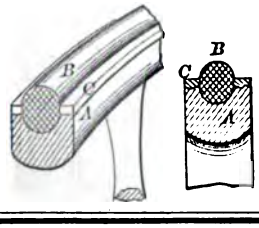

91436—D. Gusweiler—*Hot Air Furnace.*

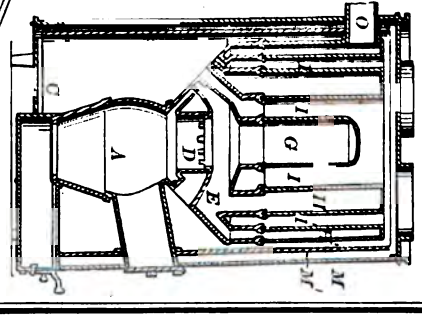

91437—C. C. Hall—*Miniature Rink.*

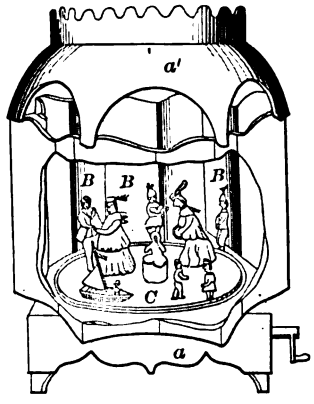

91438—C. A. Harper—*Velocipede.*

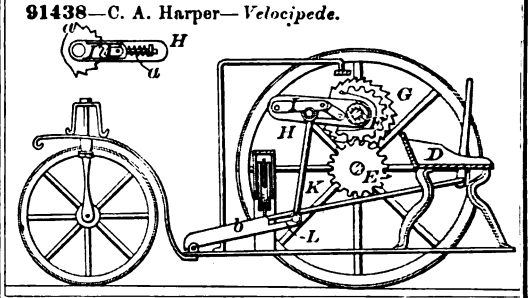

91439—L. M. Harvey—*Skirt Board and Ironing Table.*

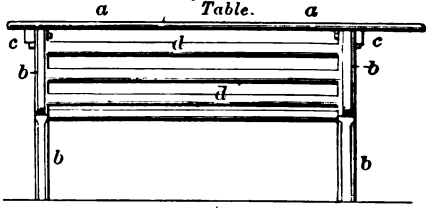

91440—T. D. Hawley—*For Shoveling Grain.*

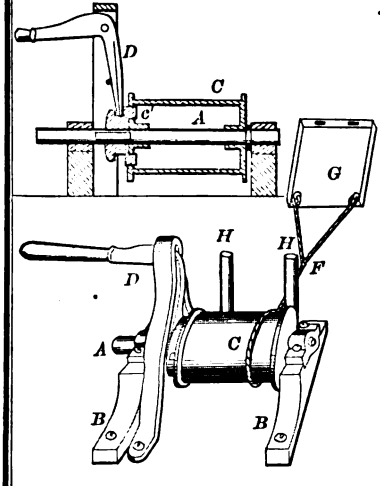

91441—C. W. Hill—*Curtain Cornice.*

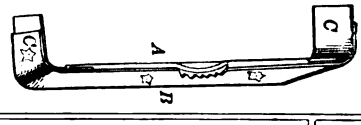

91442—A. C. Hobbs—*Cartridge Case Charger.*

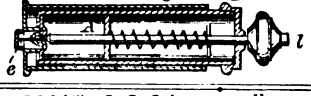

91443—J. Horton—*Gas Fixture.*

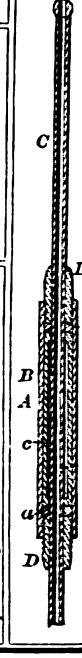

91448—J. J. Johnston—*For Distilling Hydro-Carbon Oils.*

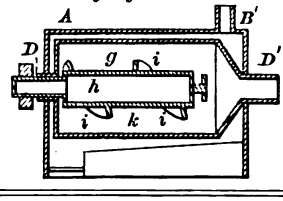

91444—W. B. Hubard—*Corn Harvester.*

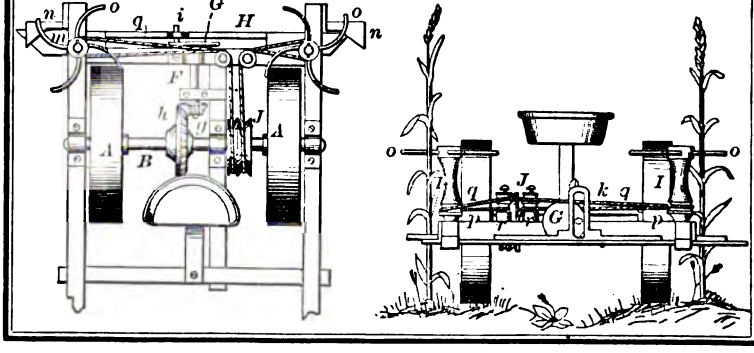

91445—L. Hunt—*Plow.*

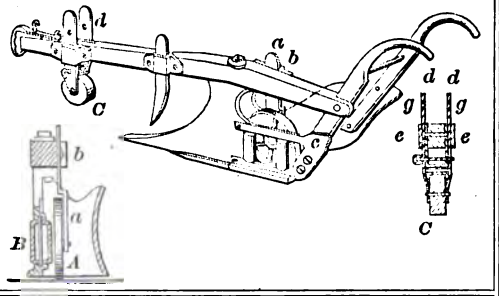

91447—J. J. Johnston—*For Distilling Hydro-Carbons.*

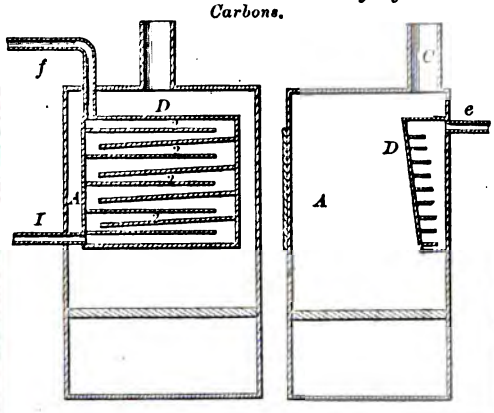

91452—W. Kunus—*Nail Extractor.*

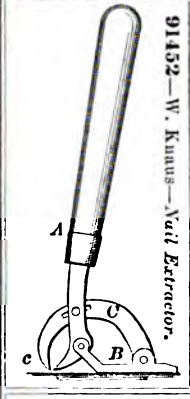

91453—G. Knell—*Rocker, Sled and Swing.*

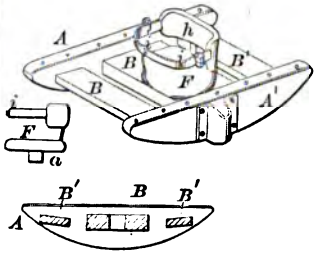

91454—G. Lange—*Churn Dasher.*

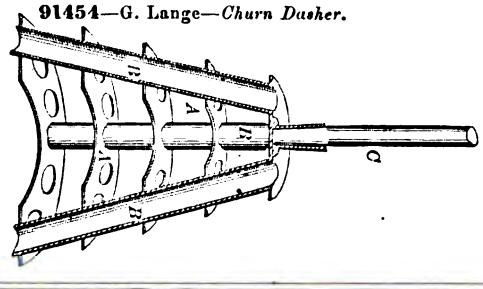

91449—H. K. Jones—*Carpenters' Square.*

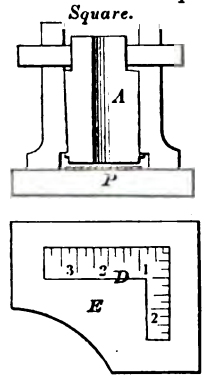

91450—A. J. Kennedy—*Sad Iron Heater.*

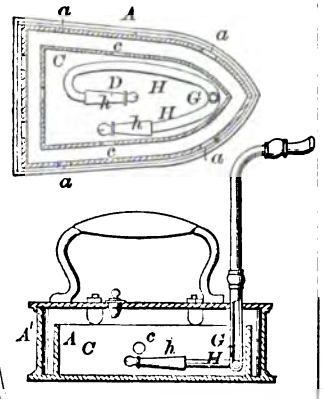

91451—D. A. Kennedy—*Oven.*

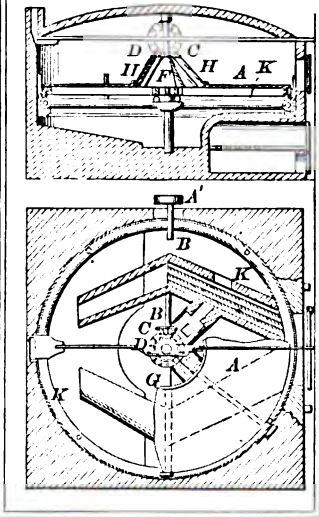

91456—W. Lauver—*Horse Power.*

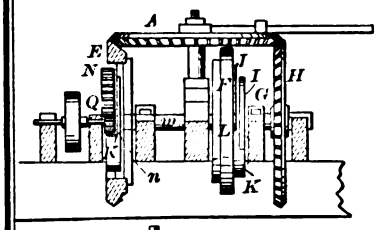

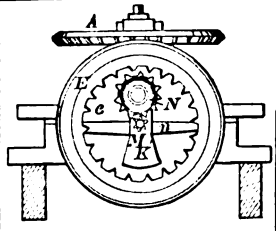

91457—T. S. Lines—*Wind Wheel.*

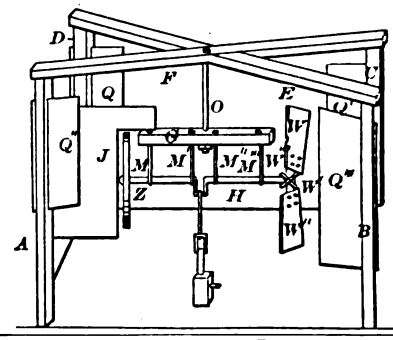

91459—S. C. Maine—*Fire Extinguisher.*

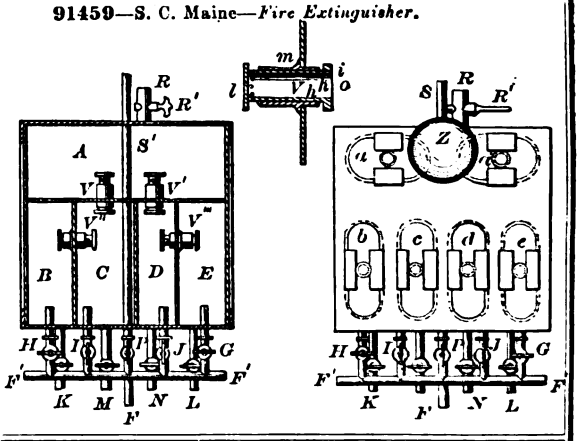

91462—A. P. Mason—*Horse Fetter.*

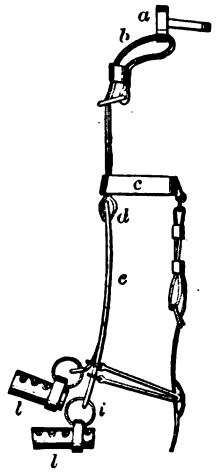

91460—M. W. Marshall—*Skate.*

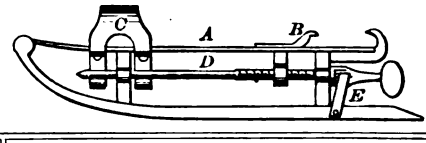

91463—A. P. Mason—*Bridle Bit.*

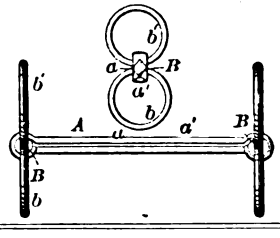

91461—W. Martin—*Sawing Machine.*

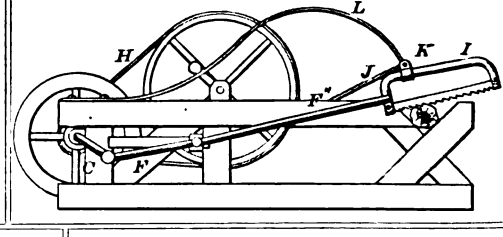

91464—A. B. Mattoon—*Coulter Cleaner.*

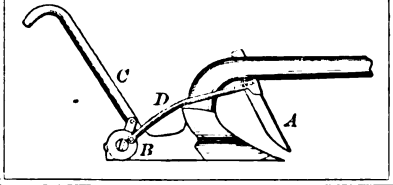

91465—W. W. Maughlin—*Sash Fastener.*

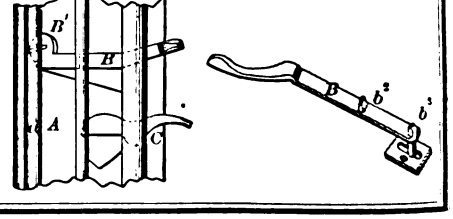

91468—T. McEwen—*Steam Engine.*

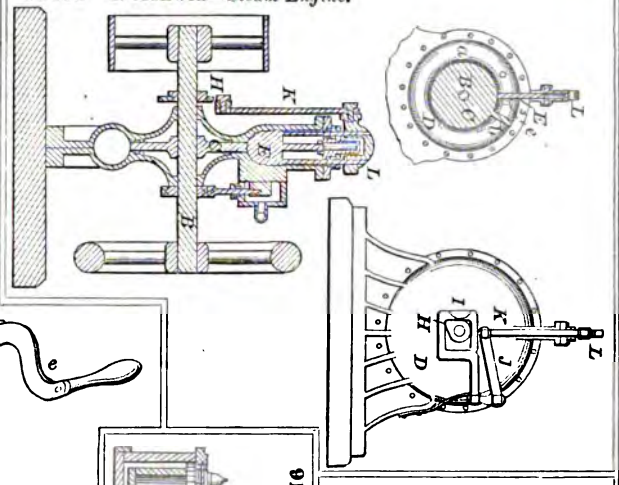

91467—D. McCurdy—*Churn Power.*

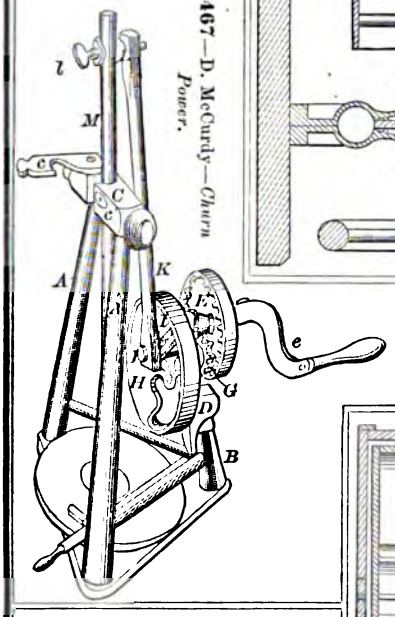

91470—O. H. Melendy—*Shoe Case.*

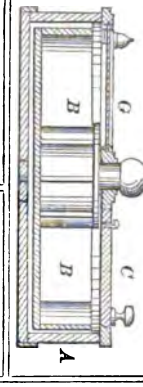

91473—F. Mills—*Postal Currency Envelope.*

91469—A. K. McMurray—*Chair.*

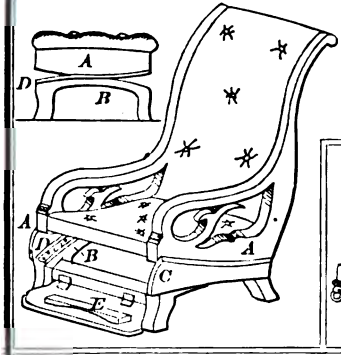

91472—W. D. Miller—*Plow.*

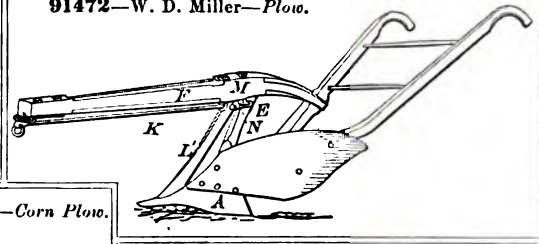

91471—Michener & Steigmeyer—*Corn Plow.*

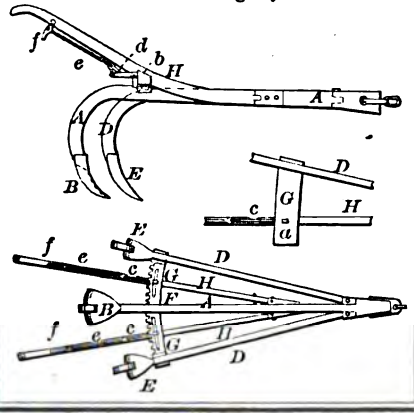

91474—Moule & Girdlestone—*Water Closet.*

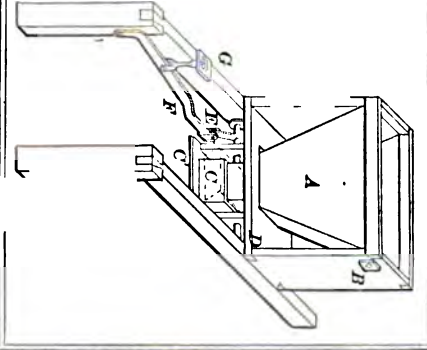

91475—A. Müller—*Water Boiler.*

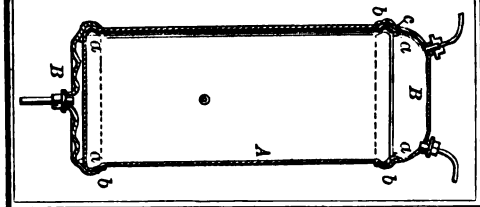

91476—Murphy & Hook—*For Making Rubber Hose, &c.*

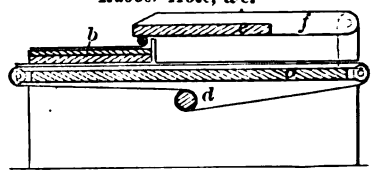

91478—I. Nutt—*For Refitting Conical Valves.*

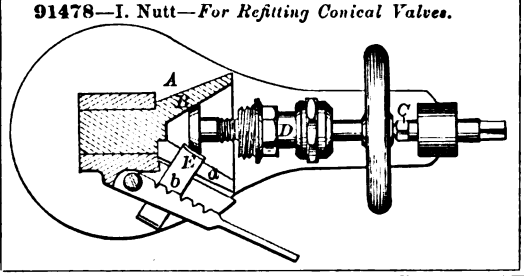

91479—A. Oehsner—*Latch and Lock.*

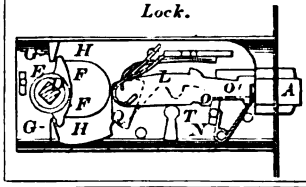

91482—G. Pye—*Harvester.*

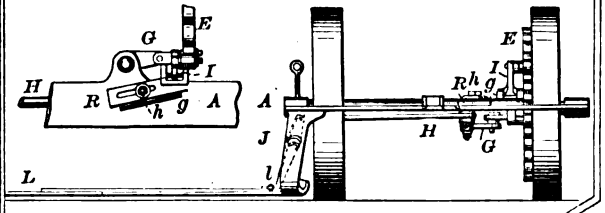

91483—P. Regitz—*Hopper Cock.*

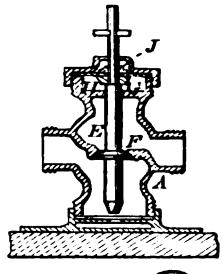

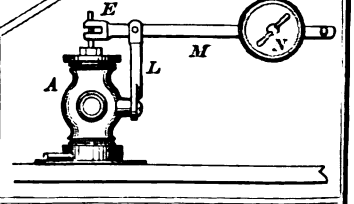

91485—D. Reynolds—*Evaporating Apparatus.*

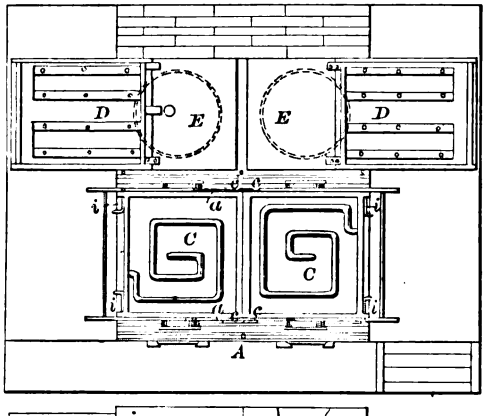

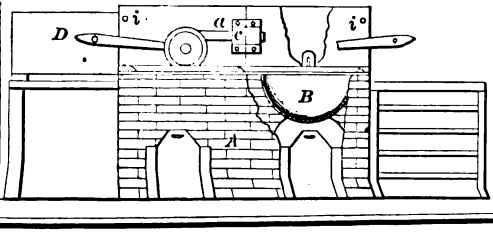

91481—M. F. Potter—*Milk Cooler.*

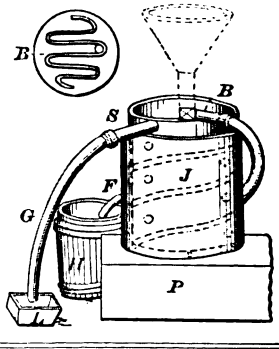

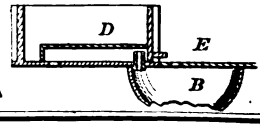

91484—G. Rehfuss—*Sewing Machine Work Plate.*

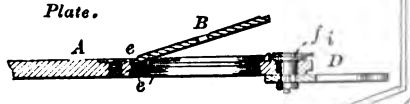

91487—J. Roberts—*Potato Digger.*

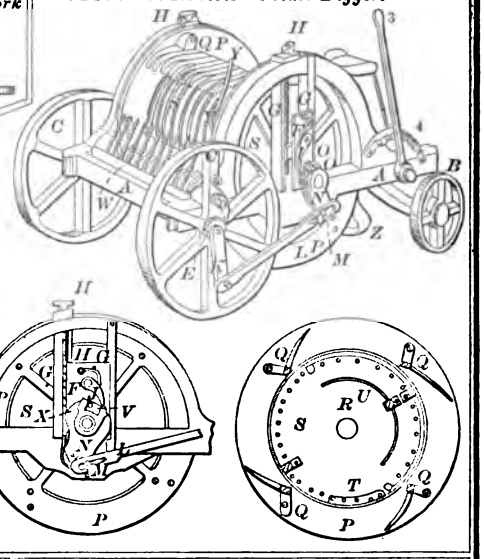

91486—P. Roberts—*Constructing Piles for Forming Axles, &c.*

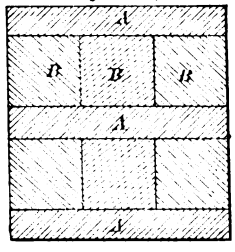

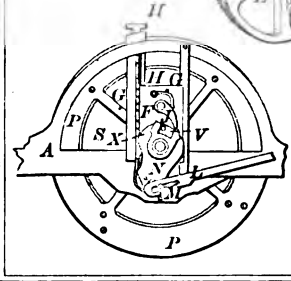

91488—W. S. Ryerson—*Boat Detaching Apparatus.*

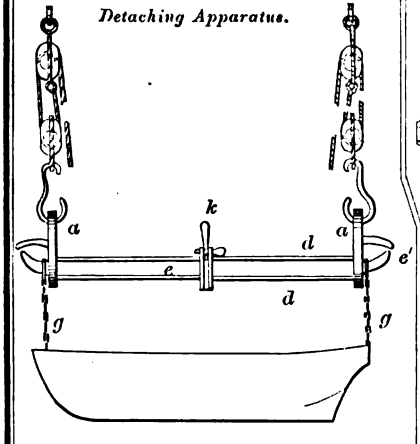

91489—H. C. Shafer—*Corn Planter.*

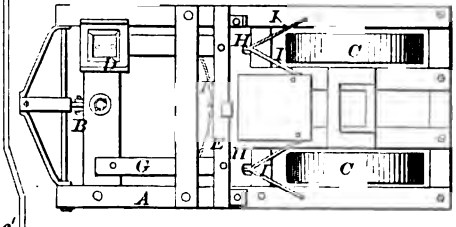

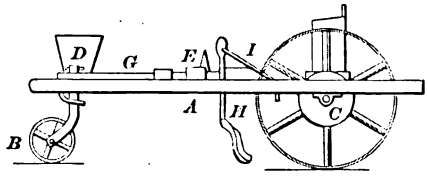

91491—De W. Stevens—*Ash Sifter.*

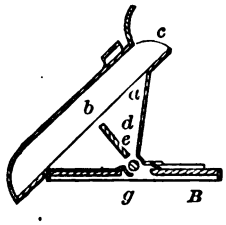

91492—S. Stevens—*Beehive.*

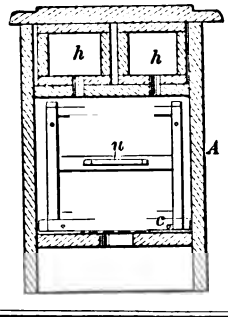

91490—C. Sholl—*Sash Holder.*

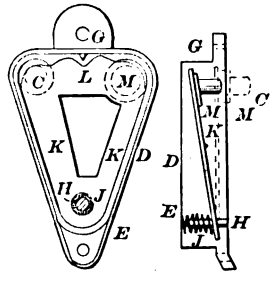

91493—C. H. Swain—*Smelting Furnace.*

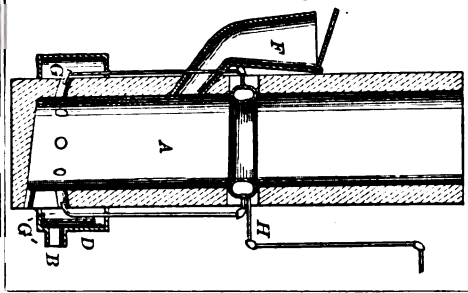

91494—A. J. Taylor—*Potato and Corn Planter.*

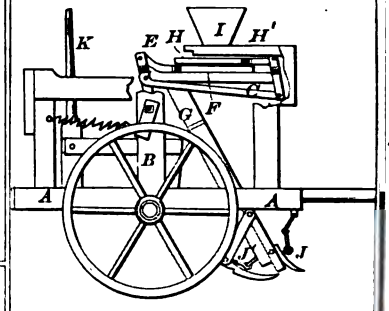

91495—H. H. Tift—*Baling Press.*

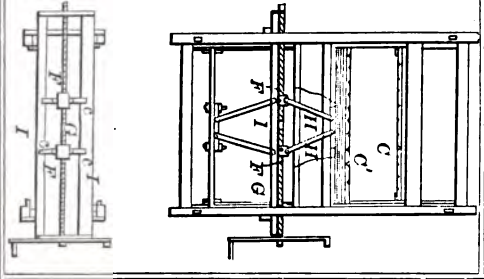

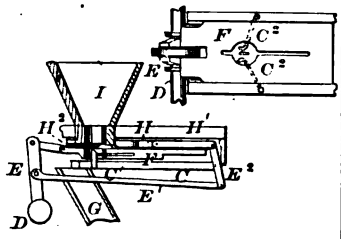

91496—L. & W. H. Trowbridge—*Gas Stove.*

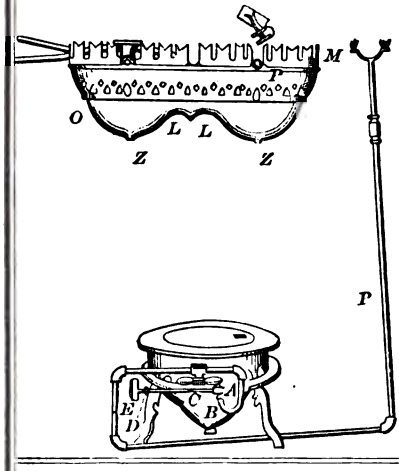

91497—S. G. Tufts—*Cultivator.*

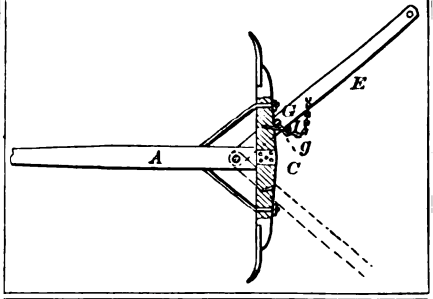

91498—J. Turner—*For Making Covered Cord.*

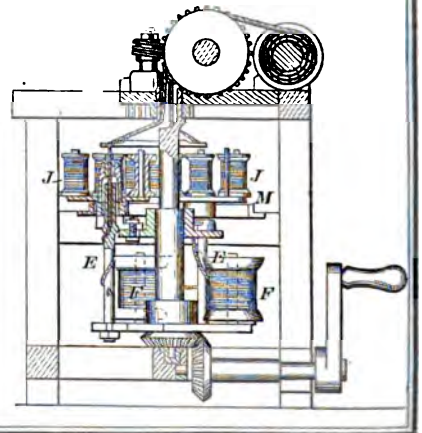

91499—Tyler & Johnston—*For Making Gas from Hydro-Carbons.*

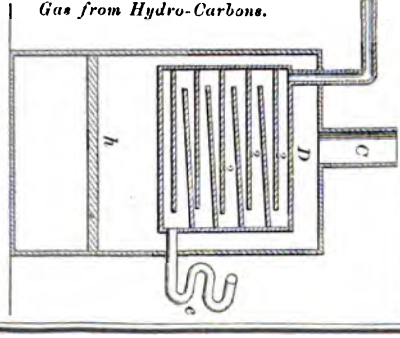

91500—A. Vail—*Whiffletree.*

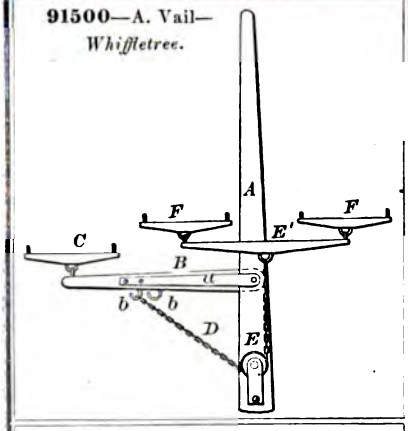

91501—Wallis & Huttmann—*Harvester.*

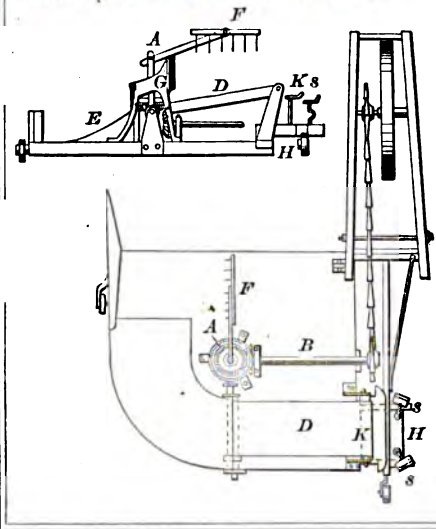

91502—J. Weizenecker—*Wine and Cider Press.*

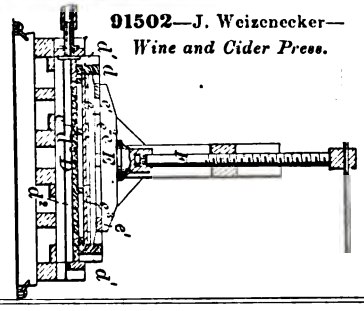

91503—C Whitehouse—*For Making Augers, &c.*

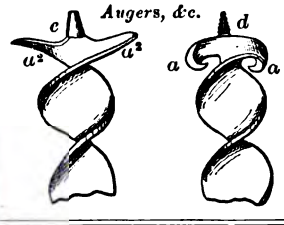

91508—J. H. Bean—*Heel Cutter.*

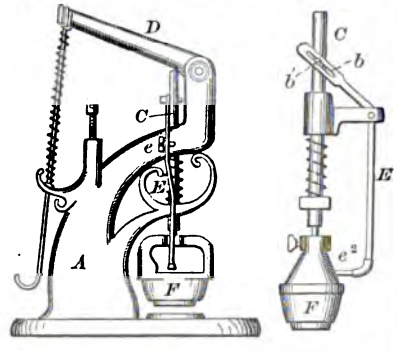

91509—C. N. Bennett—*Coal Stove.*

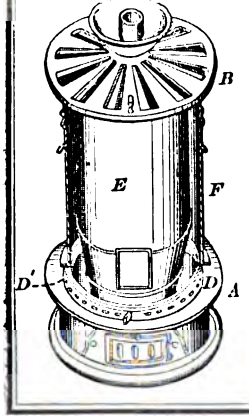

91506—B. C. Atkinson—*Steam Condenser.*

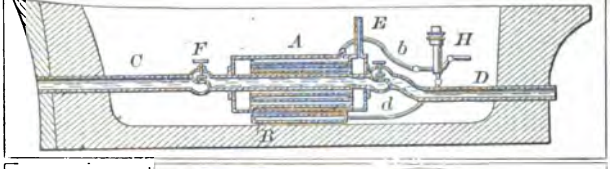

91505—J. R. Wood—*Butchers' Steel.*

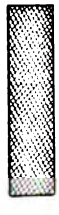

91510—G. Bergner—*Velocipede.*

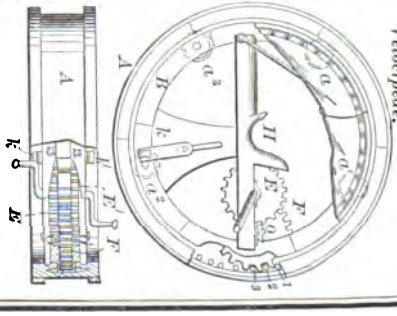

91507—L. E. Baldwin—*Stone Sawing Machine.*

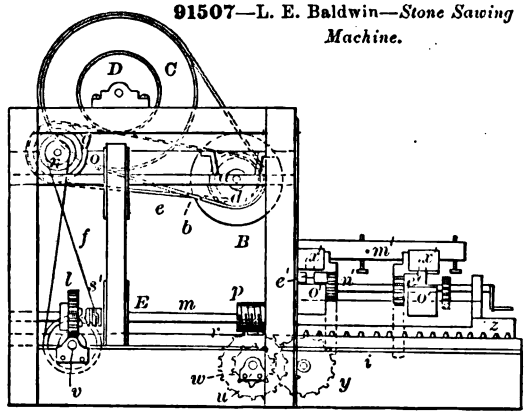

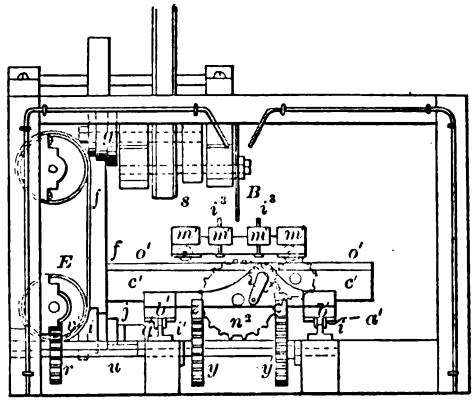

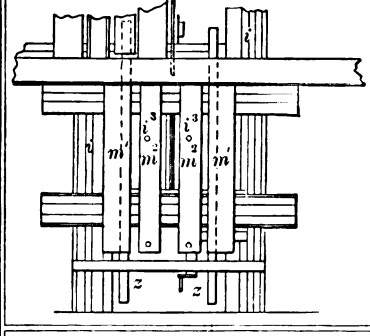

91512—R. Briggs—*For Shearing Metals.*

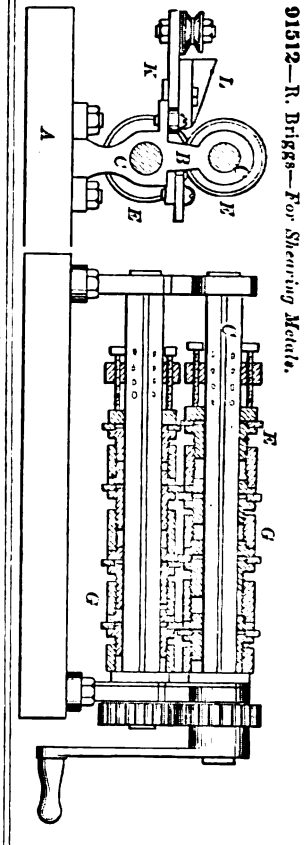

91511—Blundell & Williams—*Screw Press.*

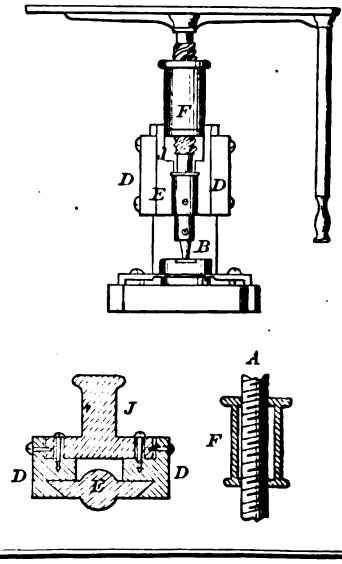

91513—A. Brisbane—*Pneumatic Tube for Transporting Goods.*

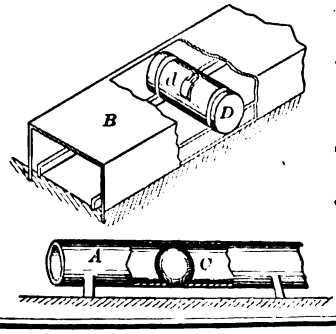

91514—T. W. Brown—*Grindstone Journal Box.*

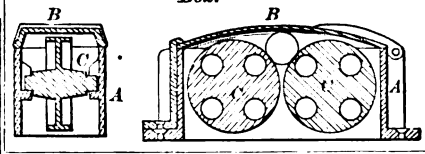

91515—H. J. Brunner—*Boiler Feeder.*

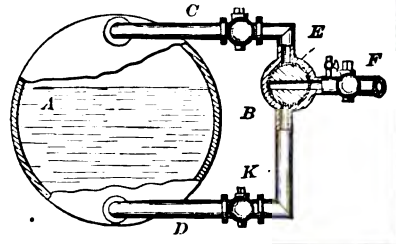

91516—A. H. Bryant—*Egg Carrier.*

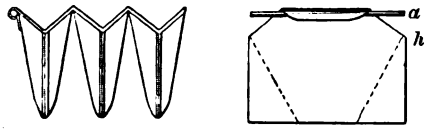

91517—Bush & Richards—*Stove.*

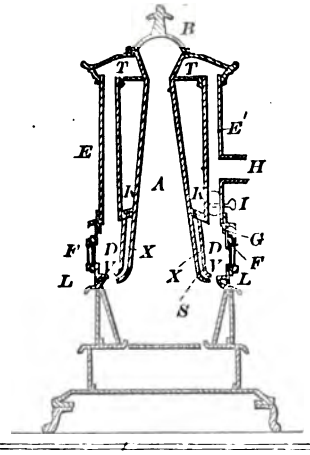

91518—J. Busser—*Wooden Wall for Buildings.*

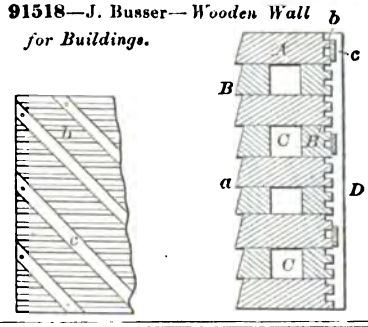

91519—W. E. Canedy—*Stove Pipe Shelf and Dryer.*

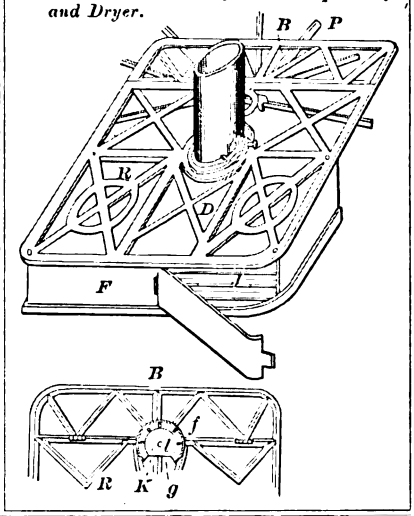

91520—Chamberlain & Crowley—*Stove.*

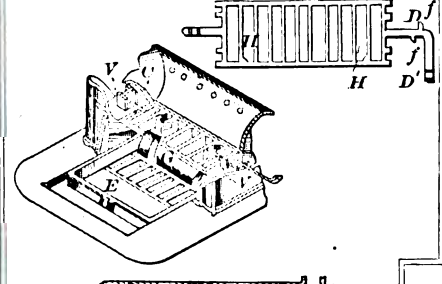

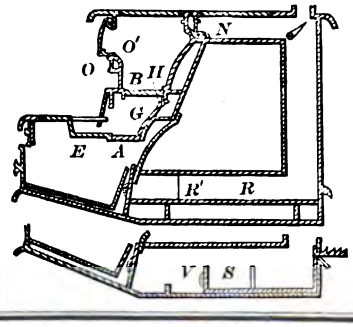

91521—J. Chisholm—*Ash Sifter.*

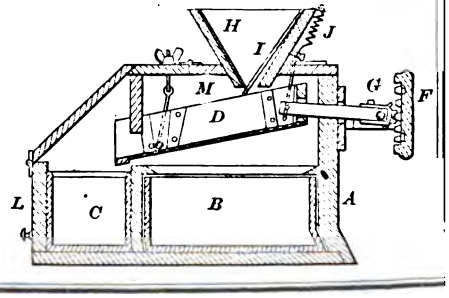

91522—J. F. Collins—*Liquor Thief.*

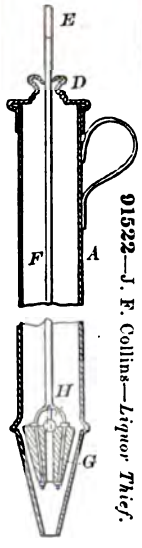

91526—J. G. Divoll—*Meat Cutting Machine.*

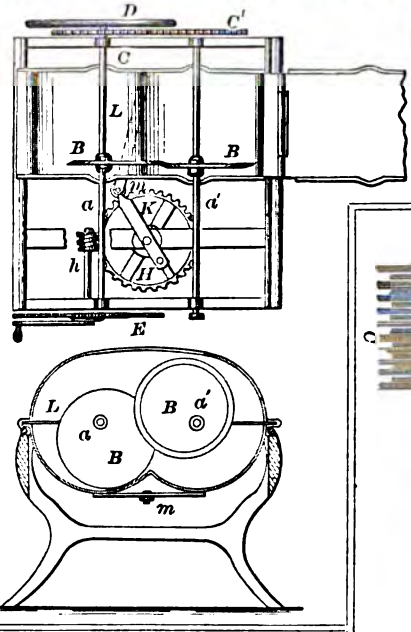

91528—S. Elliott—*Door Spring.*

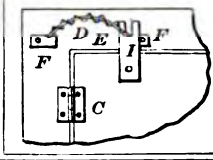

91523—P. H. Coyle—*Steam Generator Flue Brush.*

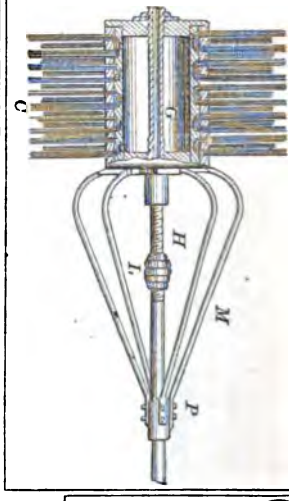

91525—I. Crum—*Harrow.*

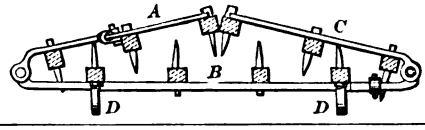

91524—A. C. Cupry—*For Warming Railroad Cars and other Purposes.*

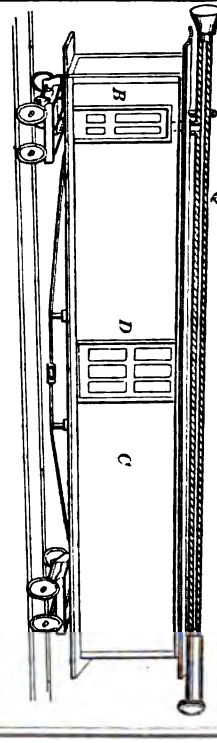

91527—T. A. Edison—*Printing Telegraph.*

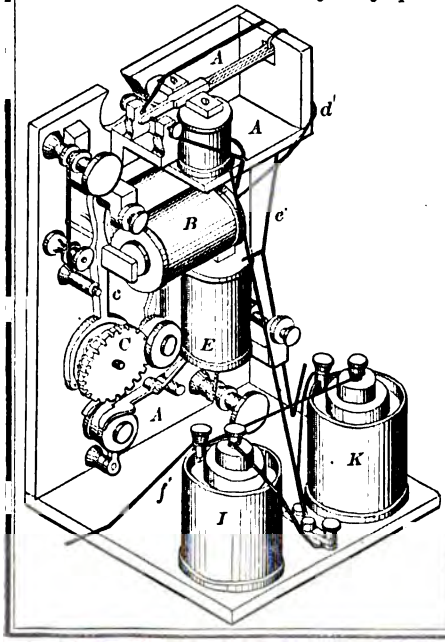

91530—H. W. Farley—*Lightning Rod.*

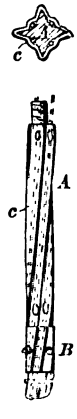

91529—W. H. Emerson—*Dish Washer.*

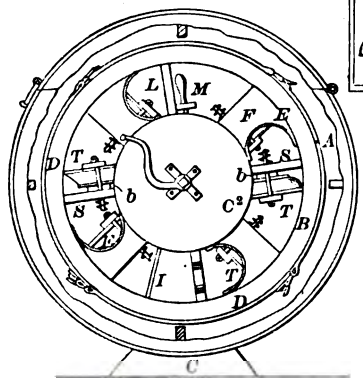

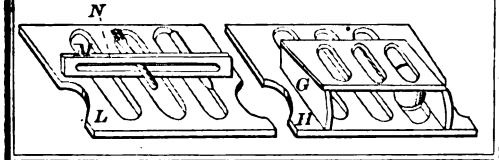

91531—M. Feigel—*Mortising Chisel.*

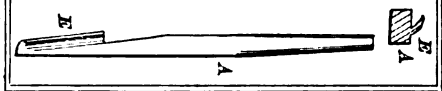

91532—H. J. Ferguson—*Railroad Rail.*

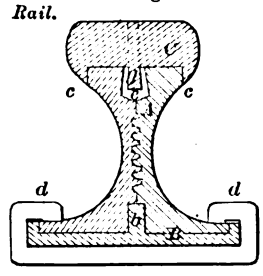

91534—L. B. Flanders—*Velocipede.*

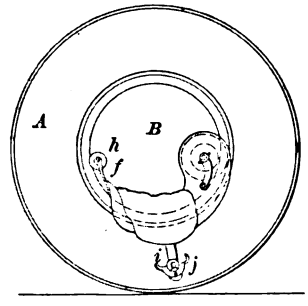

91533—L. Fischer—*Vapor Burner.*

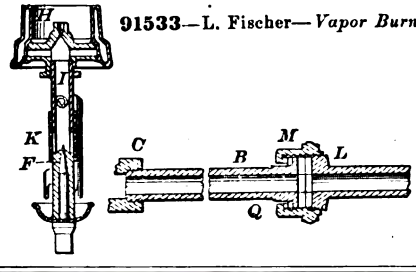

91535—Green & Dyer—*Velocipede.*

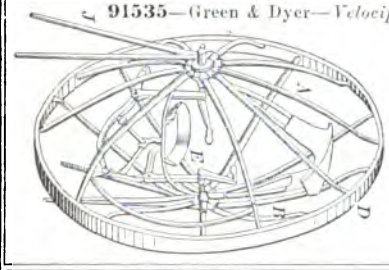

91536—J. C. Henderson—*Stove.*

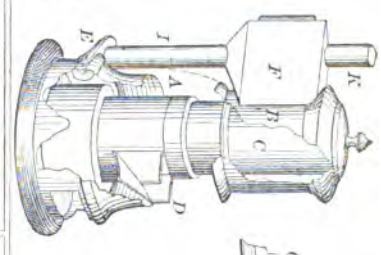

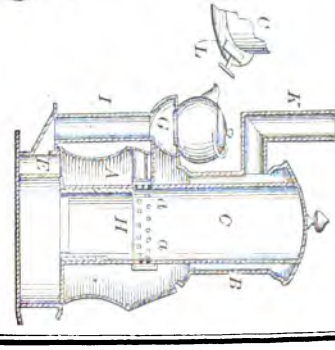

91538—Hodge & Mann—*Carriage Spring.*

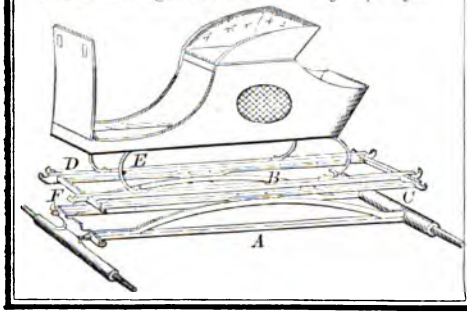

91539—A. S. Hunter—*Skate.*

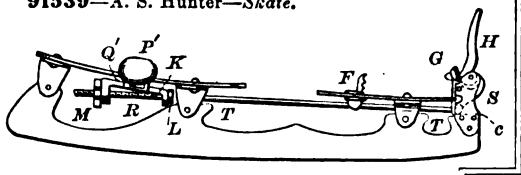

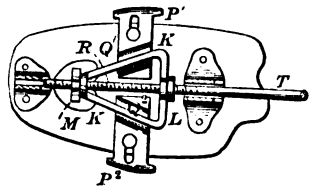

91541—J. Johnson—*Pad for Horses' Hoofs.*

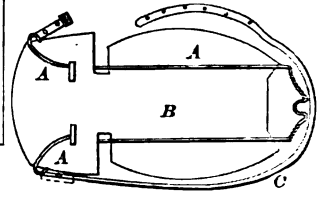

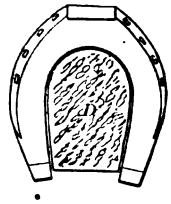

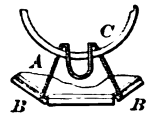

91542—D. P. Kayner—*Cooking Stove.*

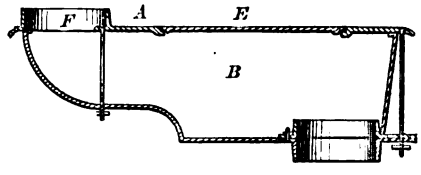

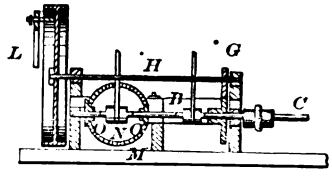

91544—I. Keller—*Wood Sawing Machine.*

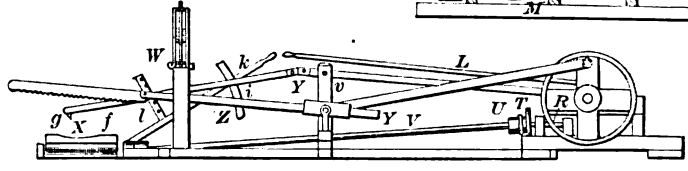

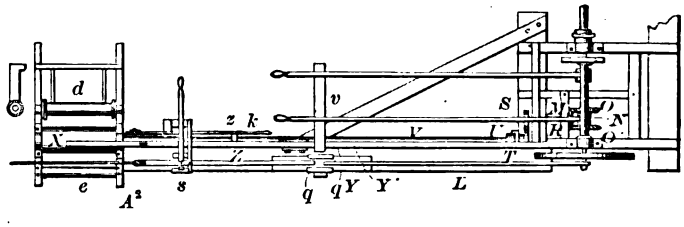

91543—J. M. Keep—*Office Indicator and Register.*

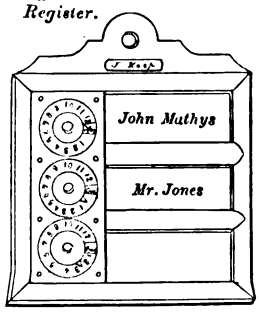

91545—I. C. Kelley—*Rosette Holder.*

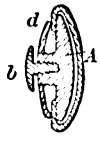

91546—P. Kline—*Horse Power.*

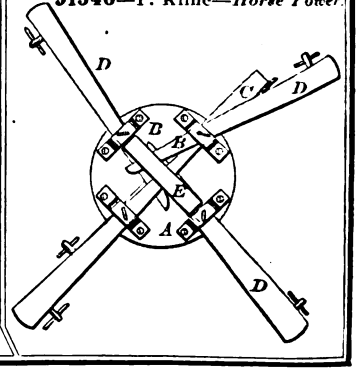

91547—W. Leathe—*Boots and Shoes.*

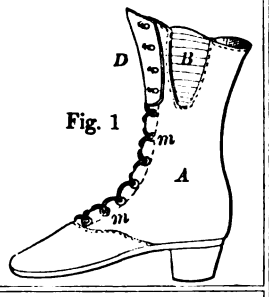

Fig. 1

91548—W. A. Lewis—*Horse Rake.*

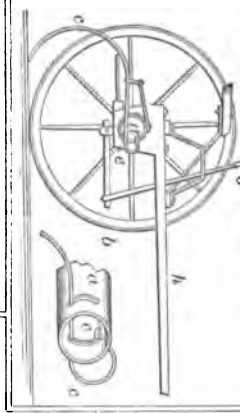

91549—W. A. Lewis—*Grain Cleaner.*

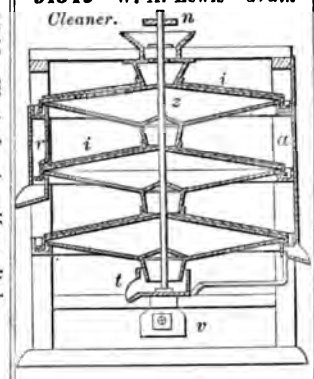

91550—J. Lund—*Velocipede.*

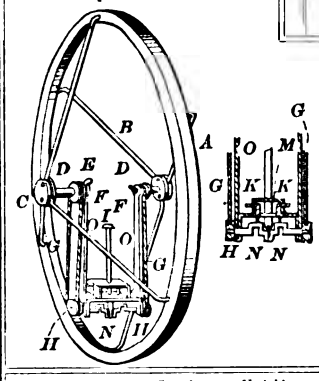

91551—B. G. Luther—*Folding Wagon Cover Frame.*

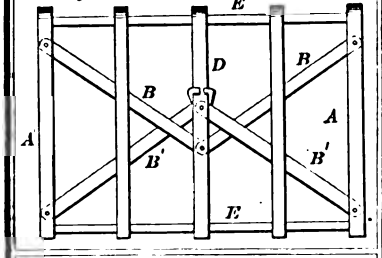

91552—A. S. Lyman—*For Curing and Preserving Meat, &c.*

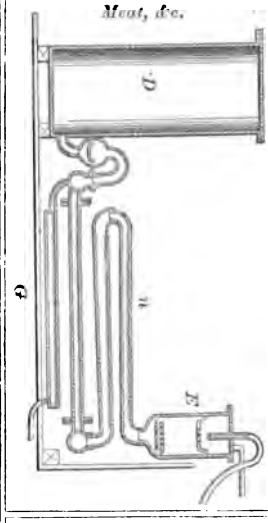

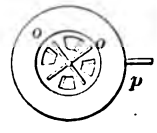

91556—Moore & Gambold—*Brush Head.*

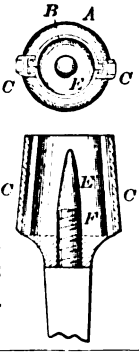

91553—C. Mackh—*Coffee Roaster.*

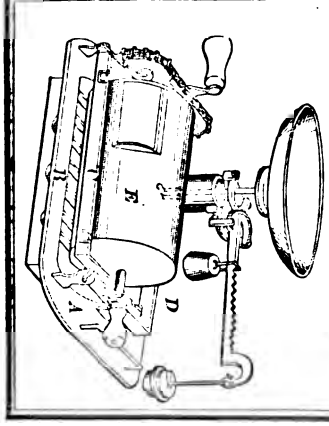

91559—J. E. Osborn—*Hat and Coat Rack.*

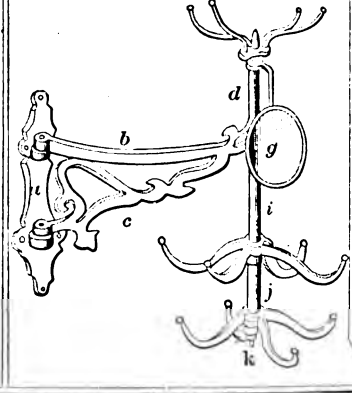

91555—T. A. Mitchell—*For Converting Motion.*

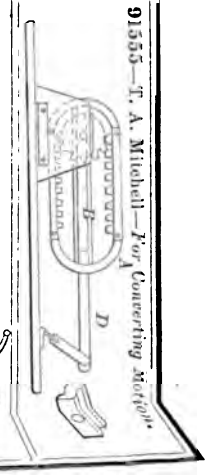

91558—J. H. Northcott—*Steam Plow.*

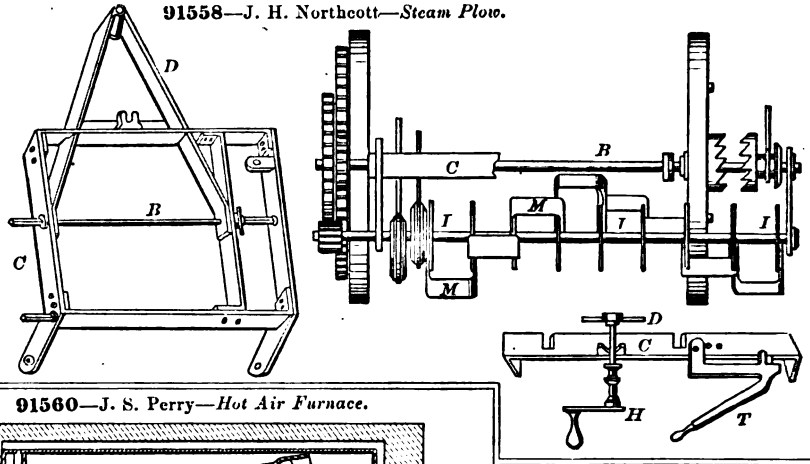

91560—J. S. Perry—*Hot Air Furnace.*

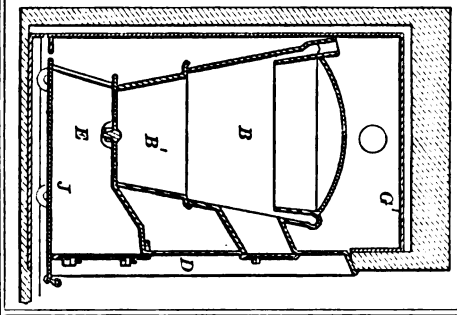

91561—C. T. Phillips—*Grain Separator.*

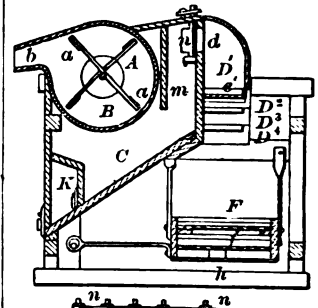

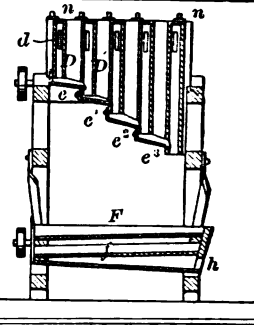

91562—A. M. Powell—*Churn.*

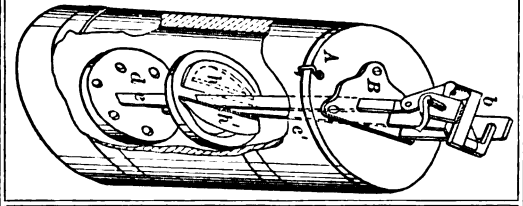

91564—E. Rice—*Spade Bayonet.*

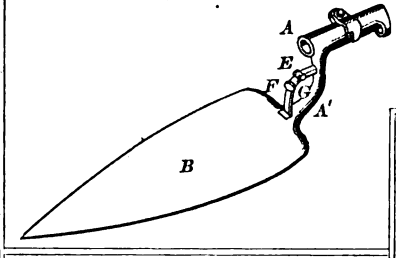

91563—S. H. Ransom—*Stove.*

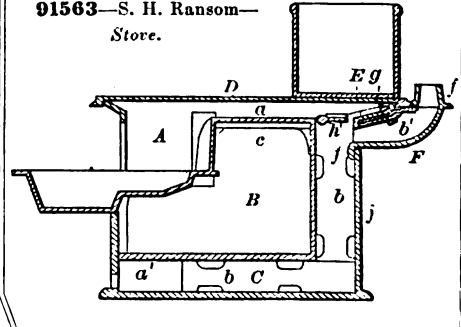

91565—H. T. Robbins—*Umbrella Runner.*

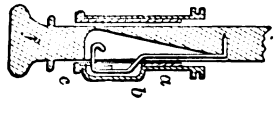

91566—J. Robinson—*Sulky Cultivator.*

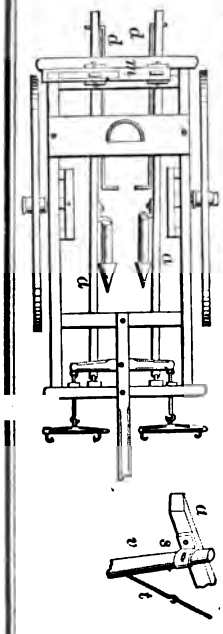

91567—G. W. Rothrock—*Foot Comforter.*

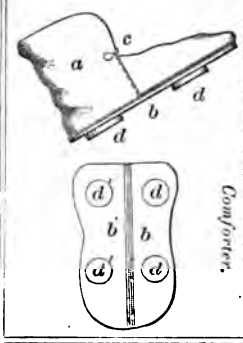

91568—N. N. Rugg—*Bag Holder.*

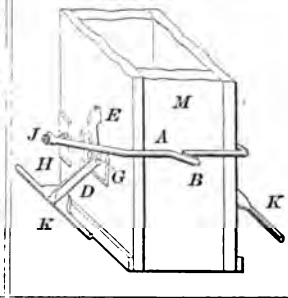

91569—W. Sanford—*Hot Air Furnace.*

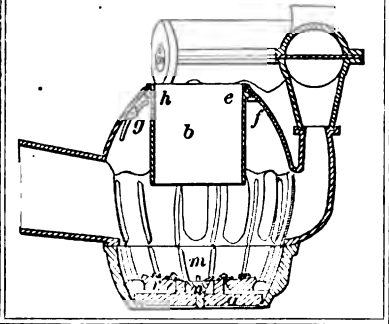

91570—A. L. Sewell—*Book Cover Protector.*

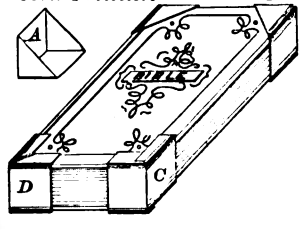

91571—Smith & Evans—*Horse Shoe.*

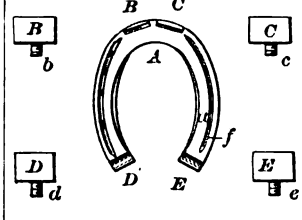

91574—W. Smith—*Water Closet Valve.*

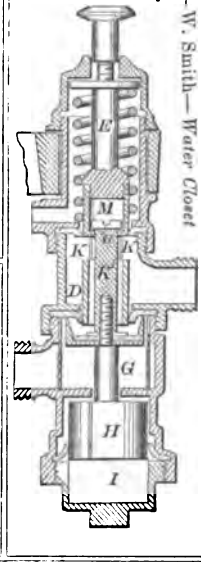

91573—J. V. C. Smith—*Carpet Fastener.*

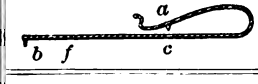

91572—J. P. Smith—*Corn Sheller.*

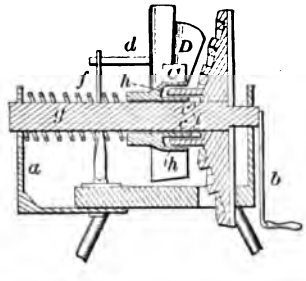

91577—H. G. Soules—*For Manufacturing Roofing.*

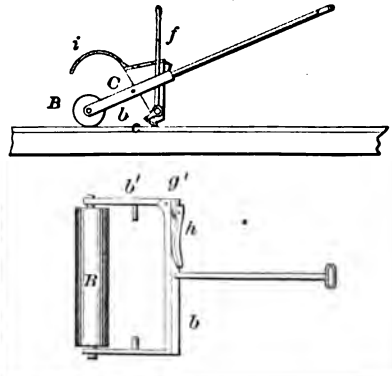

91575—D. M. Smyth—*Envelope Machine.*

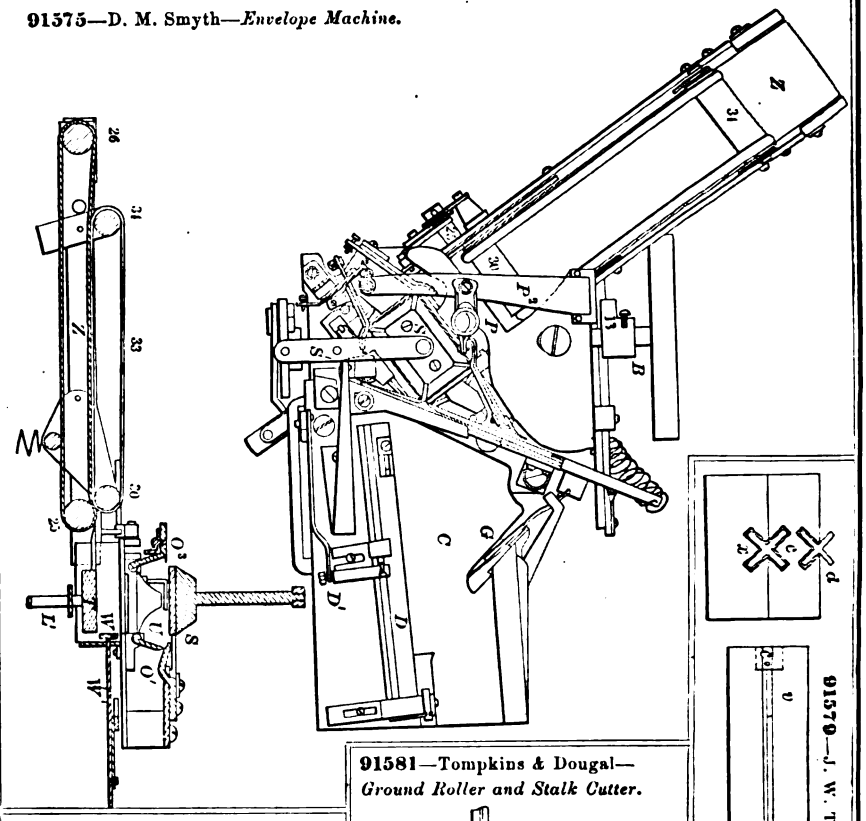

91579—J. W. Tefft—*Table Slide.*

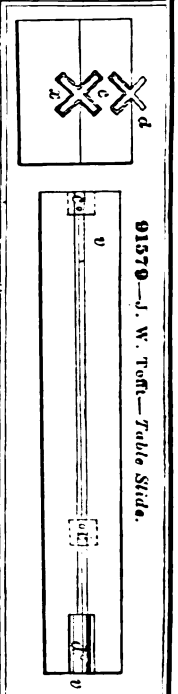

91580—T. R. Timby—*Turbine Water Wheel.*

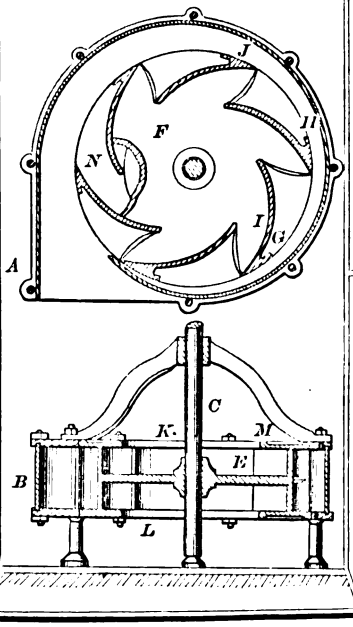

91581—Tompkins & Dougal—*Ground Roller and Stalk Cutter.*

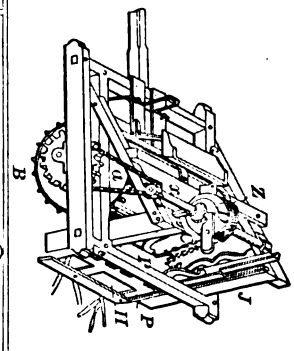

91582—W. H. Ward—*Harvester Rake.*

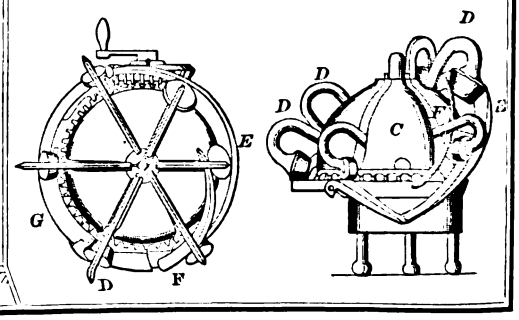

91583—F. Wittram—*Letter Box.*

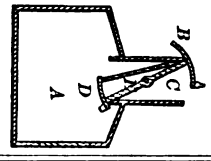

91584—W. M. Wood—*Boat Detaching Apparatus.*

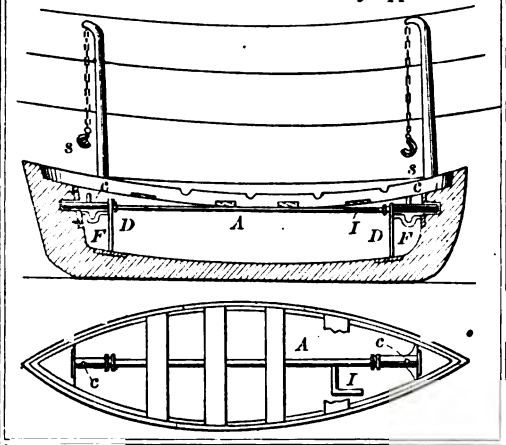

91587—J. Allonas—*Threshing Machine.*

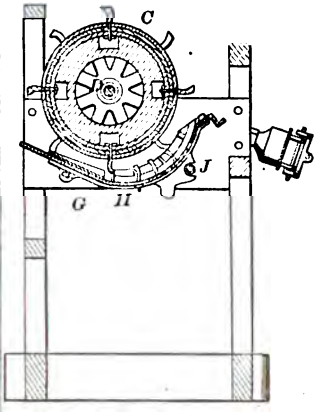

91586—J. S. Alexander—*Spade Bayonet.*

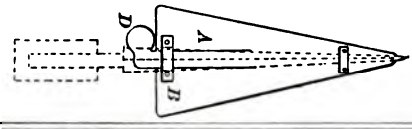

91588—R. Alsop—*For Manufacturing Illuminating Gas.*

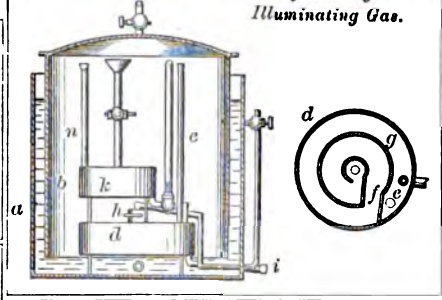

91585—C. Abbott—*Fence.*

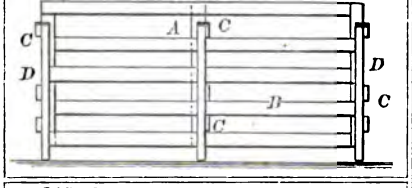

91589—S. Anderson—*Velocipede.*

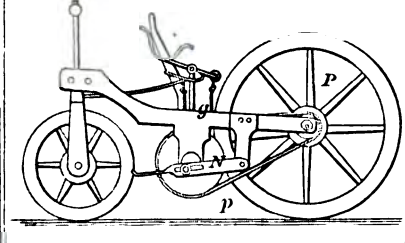

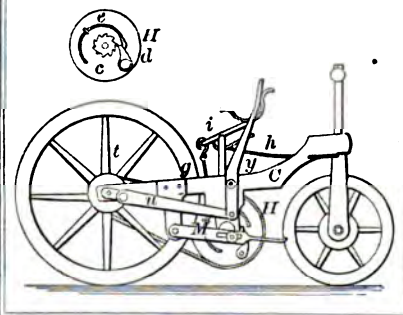

91590—L. J. Atwood—*Lamp.*

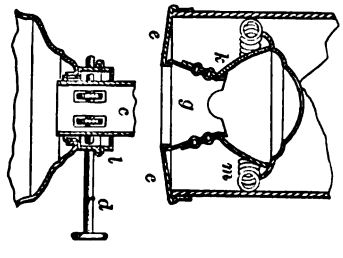

91591—J. D. Ayers—*Curtain Fixture.*

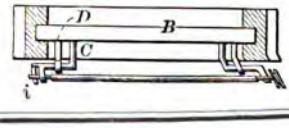

91592—J. N. Ayres—*For Bending Wire for Rake Teeth.*

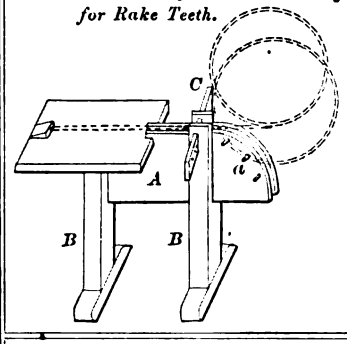

91593—N. W. Baker—*Tying up Awl.*

91594—P. Ball—*Clamp for Joining Cement Lined Water Pipes.*

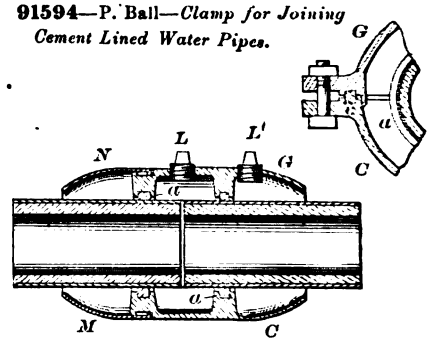

91595—G. Banister—*Seed Planter.*

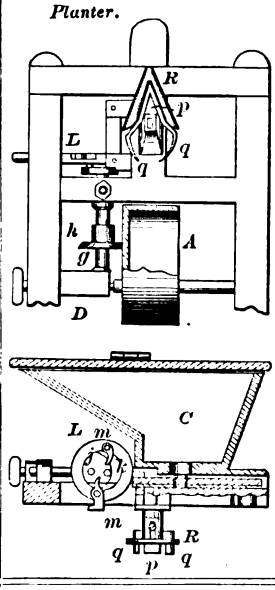

91596—A. Bennett—*Range Boiler.*

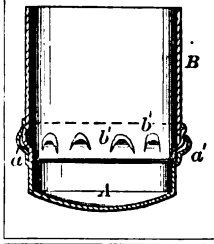

91598—E. W. Bigelow—*Stove Top and Cover.*

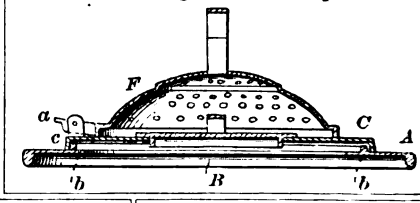

91599—J. Brahn—*Low Water Indicator.*

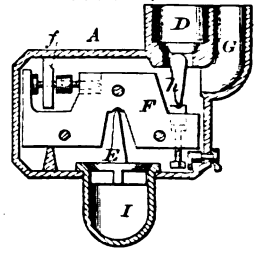

91600—H. Bruggeman—*Fanning Mill.*

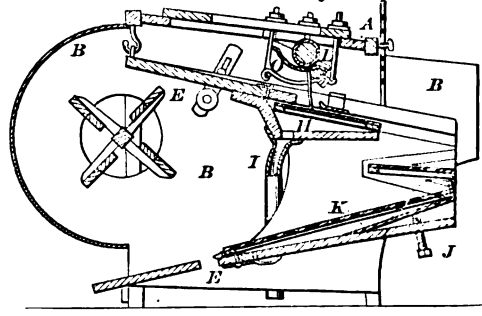

91597—L. Bertsche, Jr.—*Fireplace Grate.*

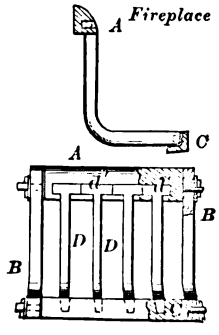

91603—Clarke & Dickey—*Lubricating Journal.*

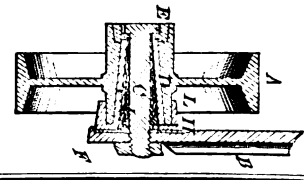

91601—Burdick, Chase, F. P. & W. S. Isherwood—*Tobacco Dryer.*

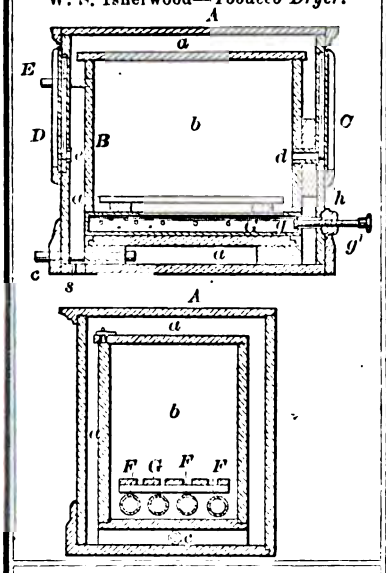

91602—A. L. Butterfield—*Velocipede.*

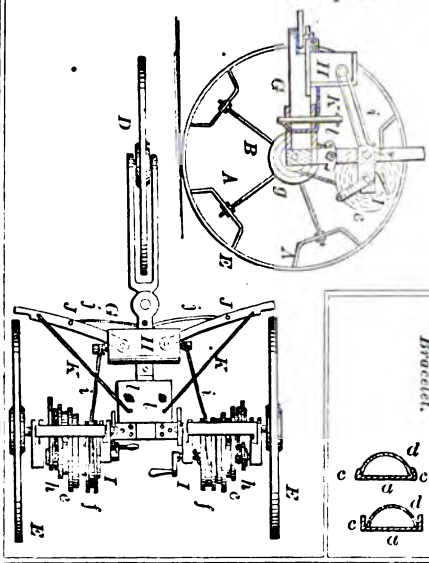

91604—A. Codding, Jr.—*Bracelet.*

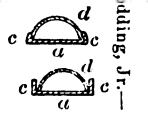

91605—L. Coes—*Wrench Bar Heading Machine.*

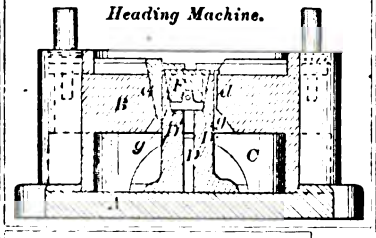

91606—C. Collins—*For Turning Boot Legs.*

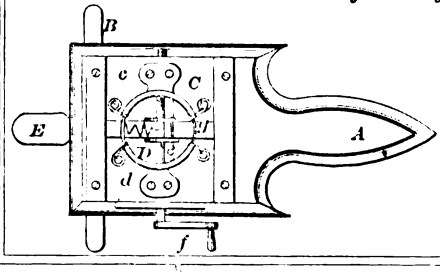

91607—W. J. Connell—*Flood Roller.*

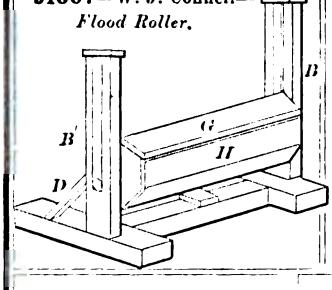

91609—J. J., L. & H. S. Crooke—*Hinge.*

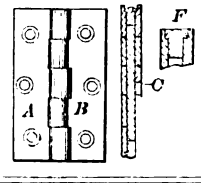

91610—A. Crosby—*Padlock.*

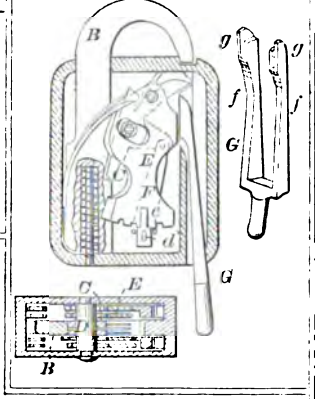

91608—A. D. Cook—*Stove Pipe.*

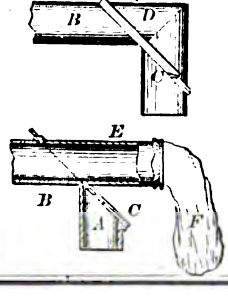

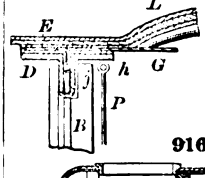

91611—A. Crosby—*Burial Case.*

91612—H. Cutler—*Flour Mill.*

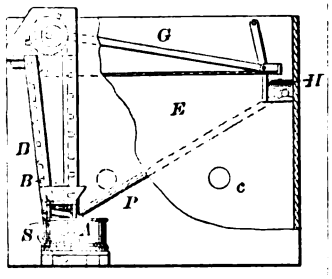

91613—M. D. Drake—*Pitman.*

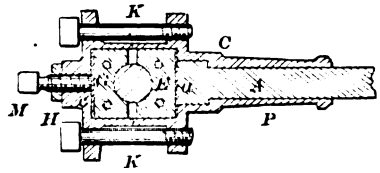

91616—L. T. Fairbanks—*Fire Arm.*

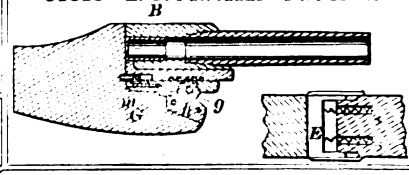

91615—J. A. H. Ellis—*Carriage.*

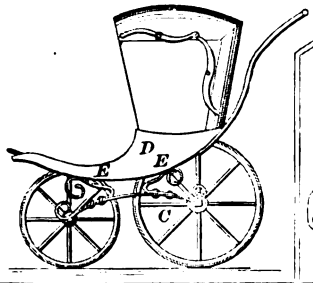

91617—R. R. Fenner—*Plow.*

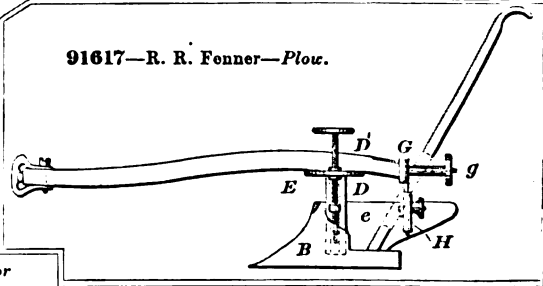

91618—D. F. Fetter—*Bush for Barrels, &c.*

91619—G. W. Francis—*For Making Sheet Iron.*

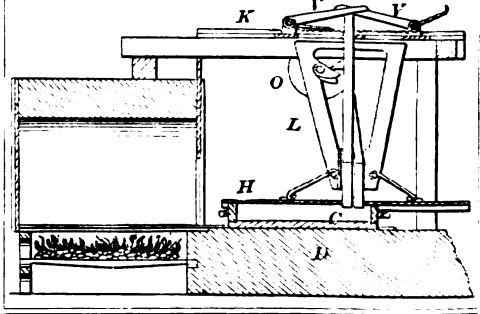

91620—D. Gore—*For Planking Hedges.*

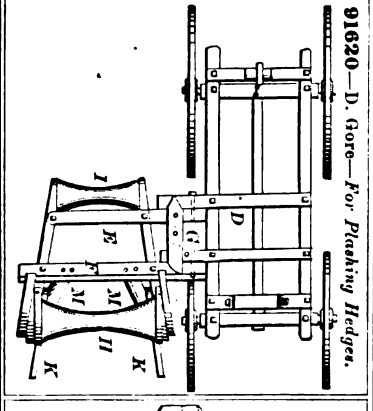

91622—D. C. Hall—*Curd Agitator.*

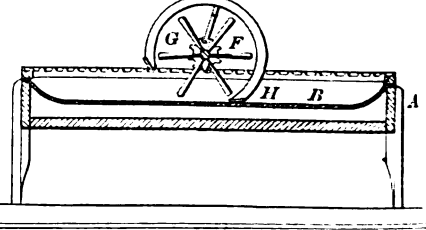

91626—H. Henley—*Fruit Dryer*

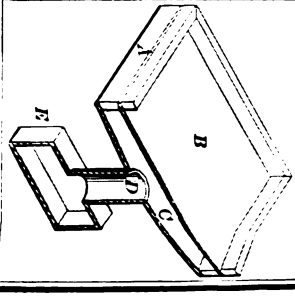

91625—R. Henderson—*Planer Chuck.*

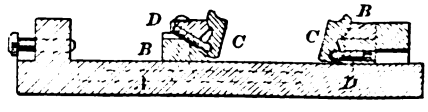

91623—F. W. Harlow—*Hay Raker and Loader.*

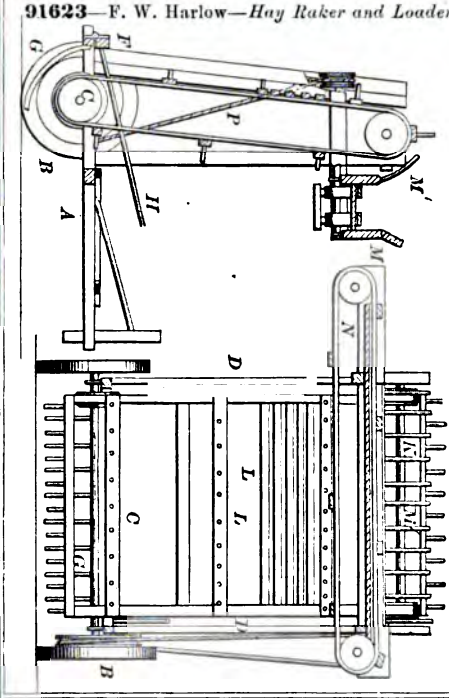

91624—J. A. Heckenbach—*Fire Arm.*

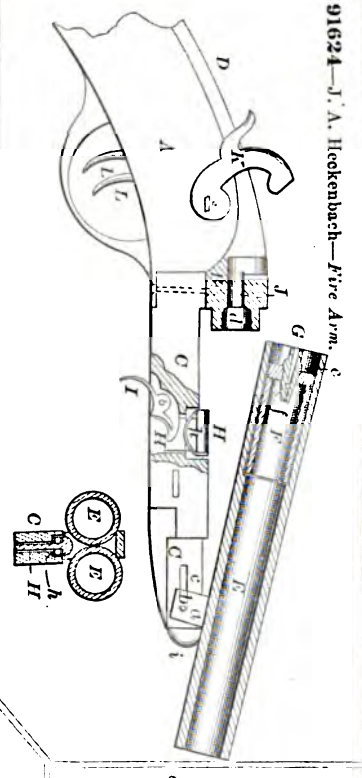

91627—Heslep & Cochrane—*Ore Washer and Concentrator.*

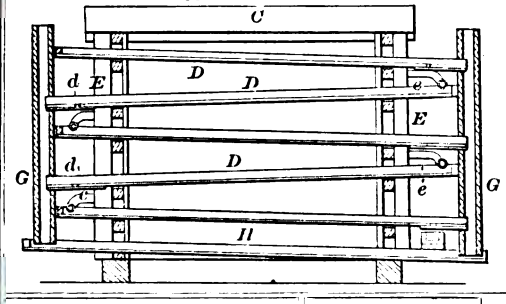

91628—M. Heusy—*For Cleaning Sausage Cases.*

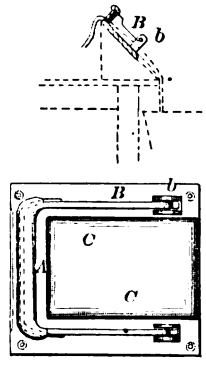

91629—H. Hickman—*Picture Nail.*

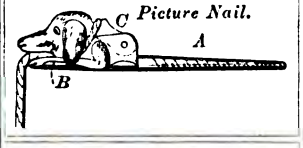

91630—H. Hickman—*Trunk.*

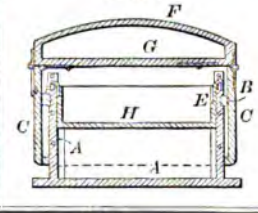

91633—J. W. Hill—*Projectile.*

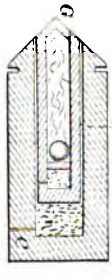

91631—D. H. Hill—*Plow.*

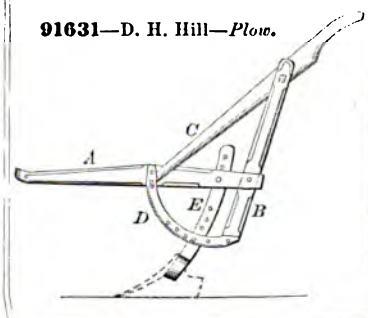

91634—W. Hofer—*Screw Driver.*

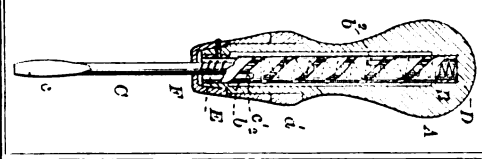

91635—T. Holt—*Grooving Machine.*

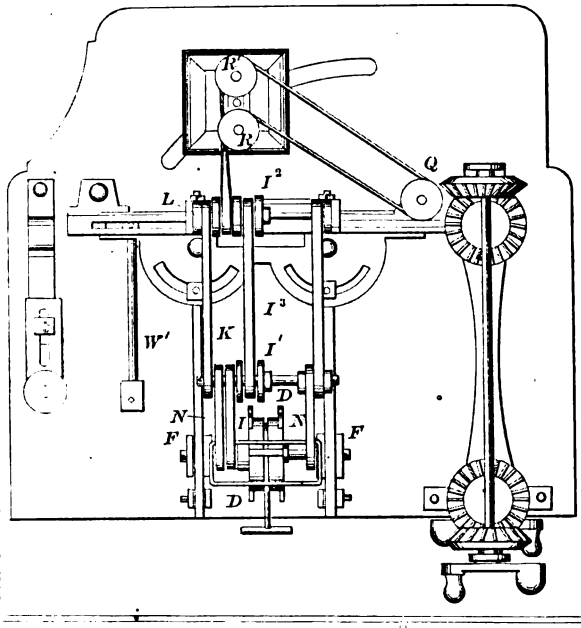

91637—J. E. Insley—*Curry Comb.*

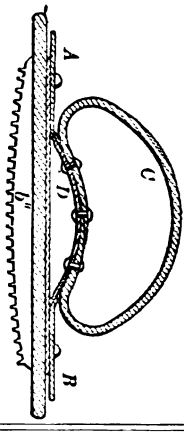

91639—W. Kelly—*Animal Poke.*

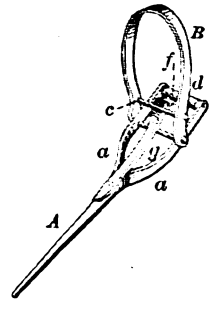

91636—J. Horton—*Tuyere Arch.*

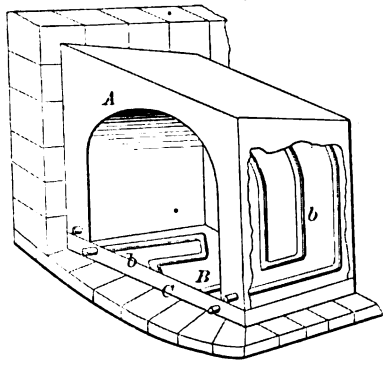

91640—W. King—*Horse Rake.*

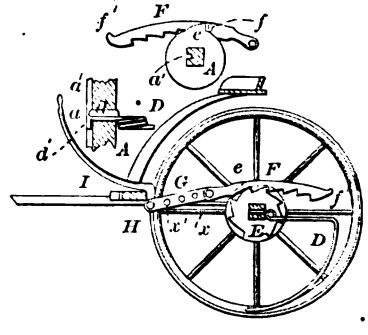

91638—O. Jennings—*Mining Sluice for Saving Sulphurets.*

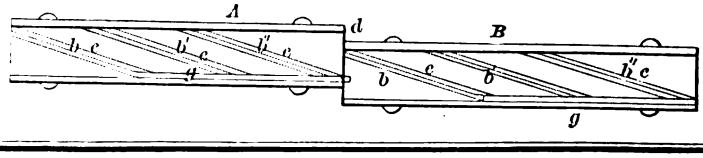

91641—S. R. Krom—*Ore Crusher.*

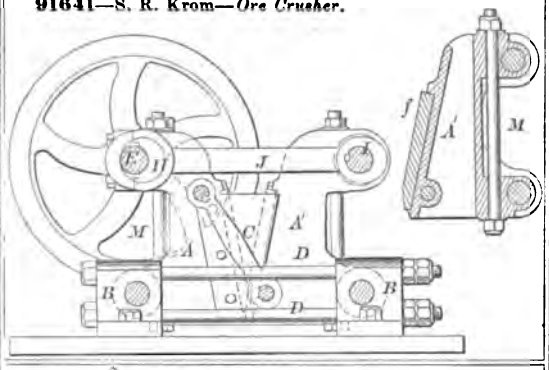

91642—J. M. Lent—*Dress Waist Pattern.*

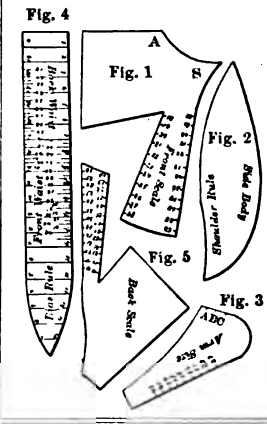

91643—J. W. Lewis—*Gang Plow.*

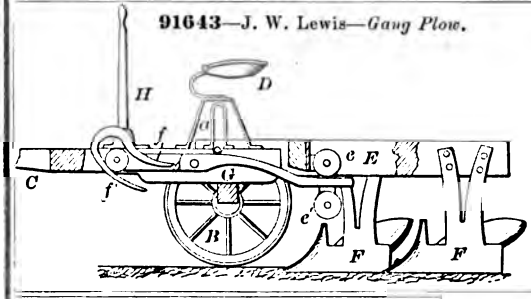

91644—J. W. Lewis—*Plow Cutter.*

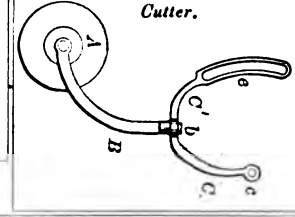

91645—Limerick & Stein—*For Advertising.*

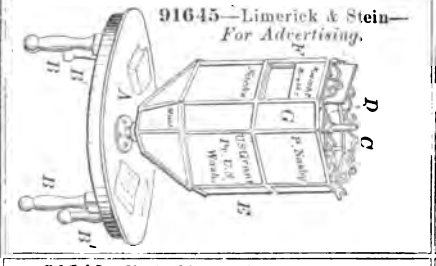

91646—T. A. Lyle—*Fan Attachment for Sewing Machines.*

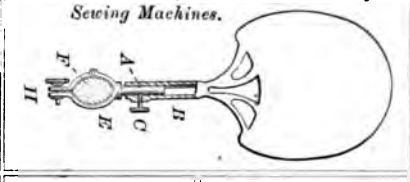

91648—F. A. Muck—*Pump.*

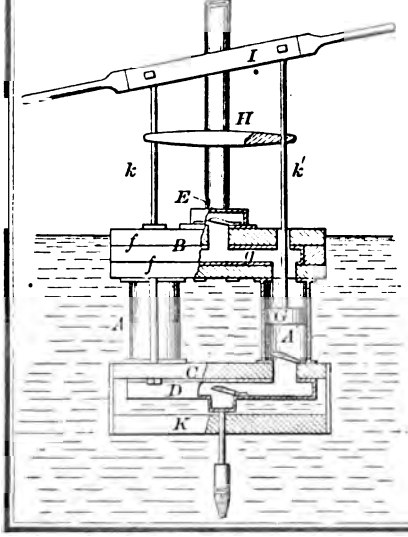

91650—W. N. Martin—*Watch Key.*

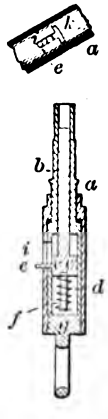

91651—P. McCollum—*Fence.*

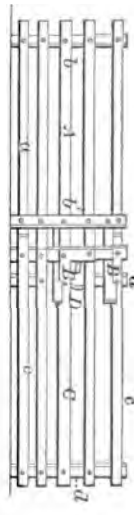

91649—Marshall & Hawkins—*Wheel Making Machine.*

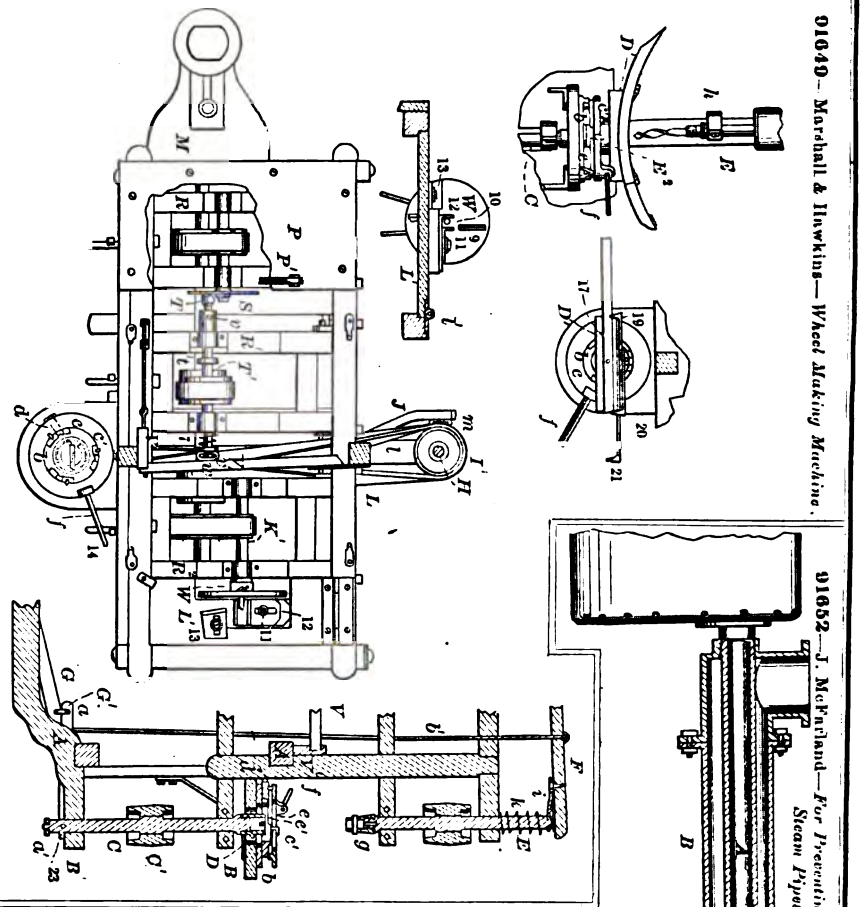

91652—J. McFarland—*For Preventing Radiation of Heat from Steam Pipes.*

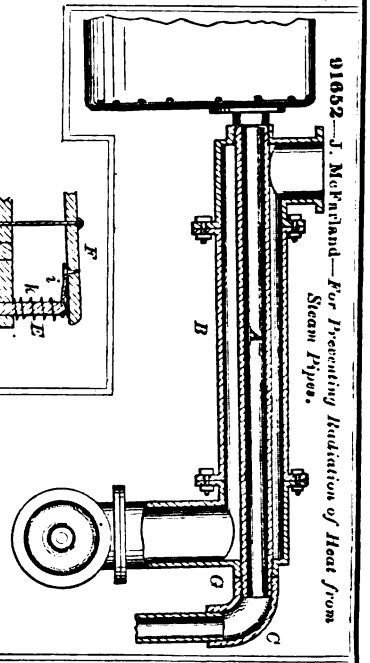

91653—J. McIntire—*For Making Twine, &c.*

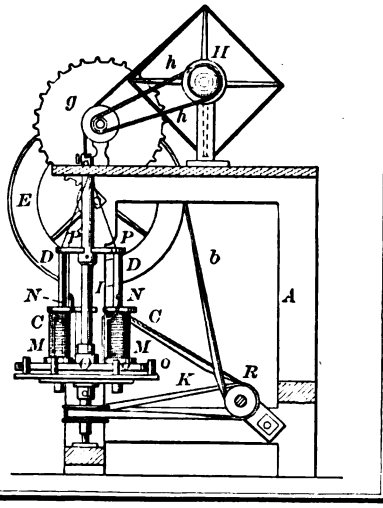

91655—J. B. Miner—*Seed Planter.*

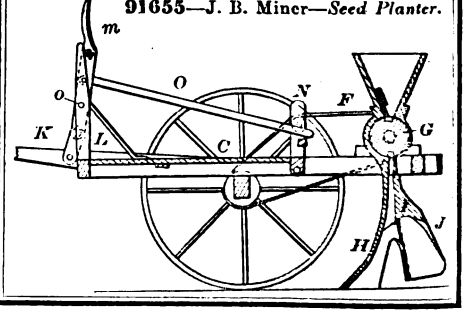

91656—J. Montgomery—*Machine Belting.*

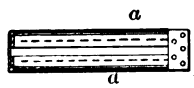

91657—J. W. Murfee—*Subsoil Plow.*

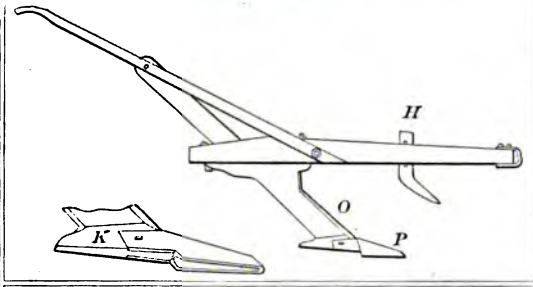

91658—J. Nichols—*Threshing Machine Concave.*

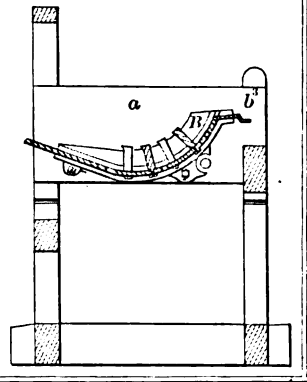

91663—D. Pike—*Railway Switching Apparatus.*

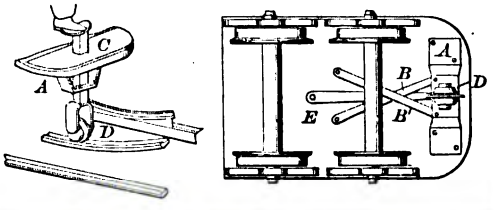

91662—G. M. Phelps—*Printing Telegraph.*

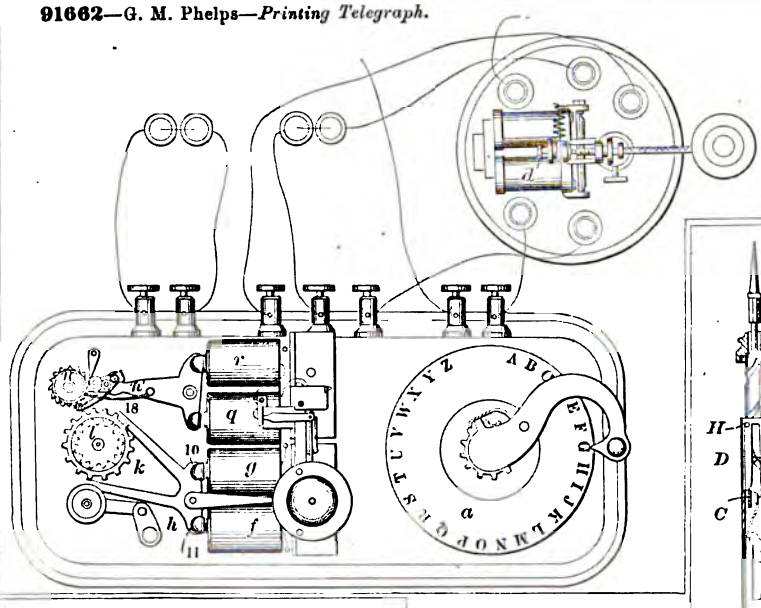

91665—J. H. Krauch—*Pencil Case.*

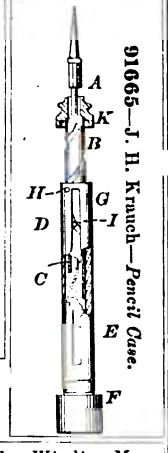

91661—R. B. & J. K. Parks—*Cultivator.*

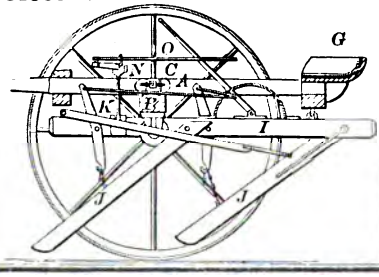

91660—J. S. Ostrander—*For Winding Maps, Songs, Curtains, &c.*

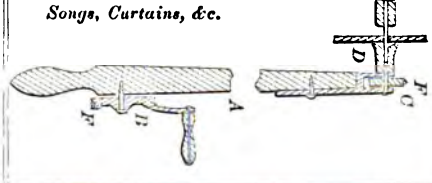

91664—C. L. Prouty—*Broiler and Toaster.*

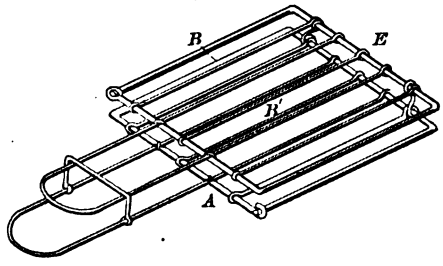

91666—J. L. Reber—*Paper Box.*

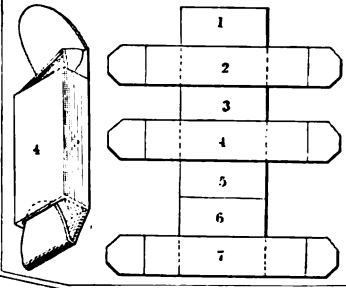

91668—W. Richard—*Fire Arm.*

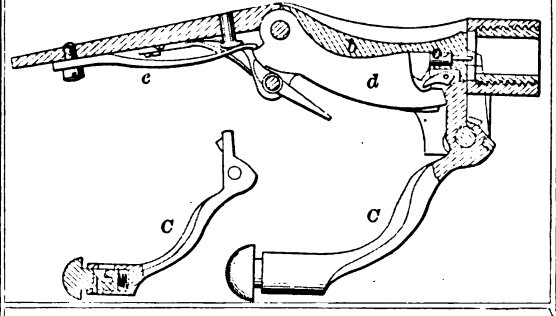

91669—F. B. Richardson—*Casting Jug Tops.*

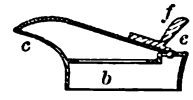

91672—C. C. Scaife—*Metallic Roofing.*

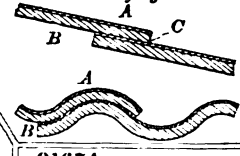

91670—Robinson, Lonine, N. T. & D. W. Hyatt—*Felting Machine.*

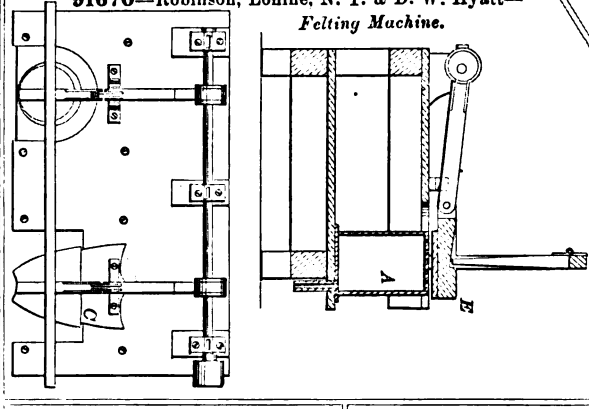

91674—Senour & Traphagan—*Boots and Shoes.*

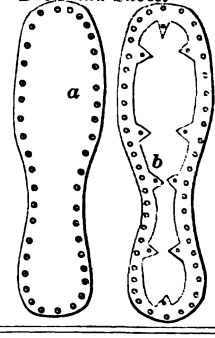

91671—Rogers & Selby—*Fruit Dryer.*

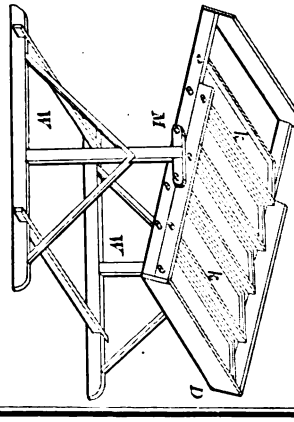

91673—G. Schneider—*Picture Frame.*

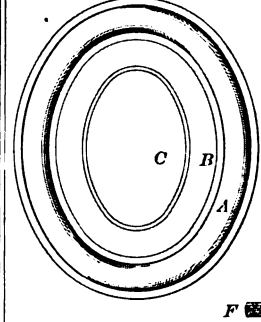

Fig. 4

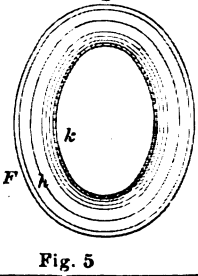

Fig. 5

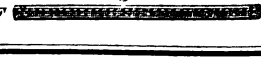

91675—H. C. Sergeant—*Water Meter.*

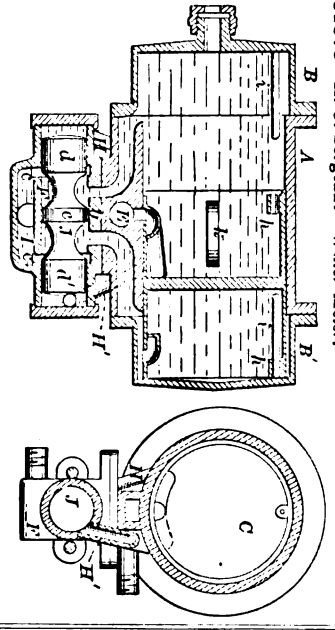

91676—H. C. Sergeant—*Steam Pump.*

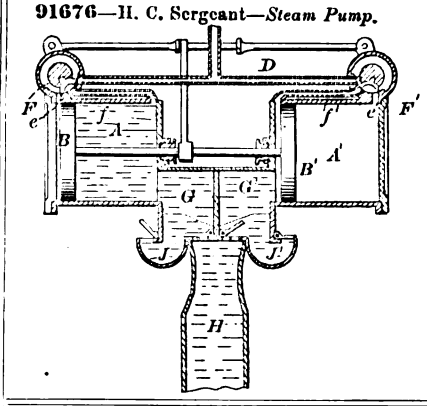

91677—L. W. Sibley—*Gate.*

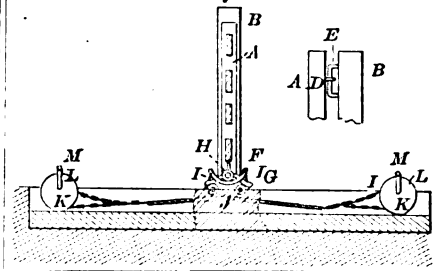

91679—L. A. Sinclair—*Velocipede.*

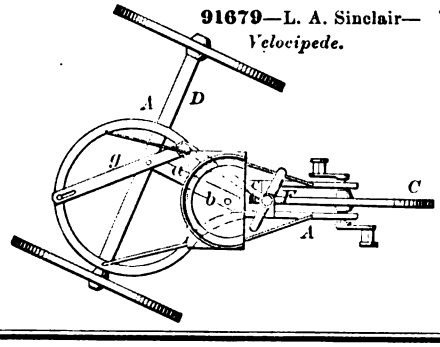

91681—A. Smith—*Elliptograph.*

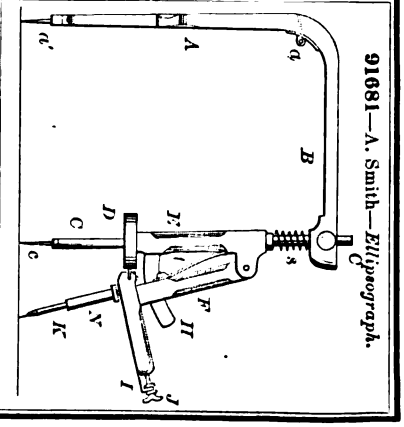

91682—Smith & Walker—*Velocipede.*

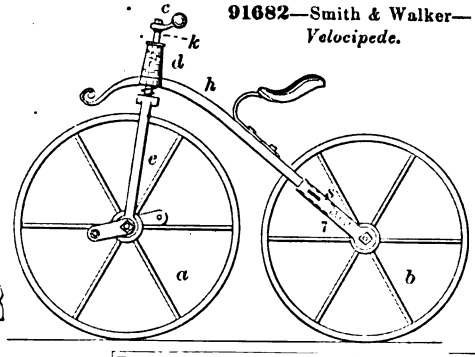

91683—Spaulding & Smith—*Bracket Clamp.*

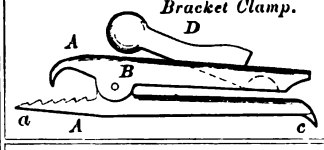

91684—G. Stackpole—*Sewing Machine.*

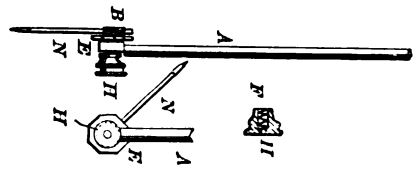

91685—S. G. & W. E. Sturges—*Buckle and Snap.*

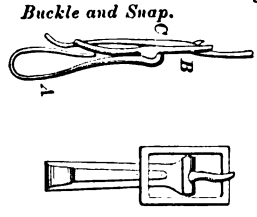

91687—S. Taylor—*Organ and Book Case.*

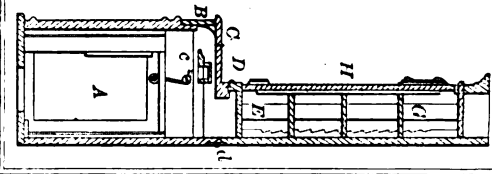

91688—D. Trefry—*Bureau Bedstead.*

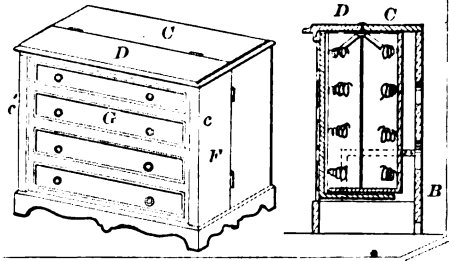

91686—S. Taylor—*Organ and Melodeon.*

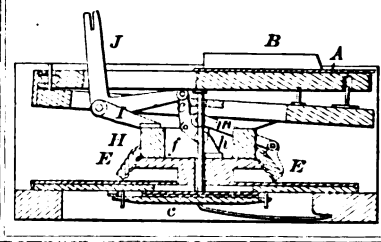

91689—C. Truesdale—*Fireplace Lining.*

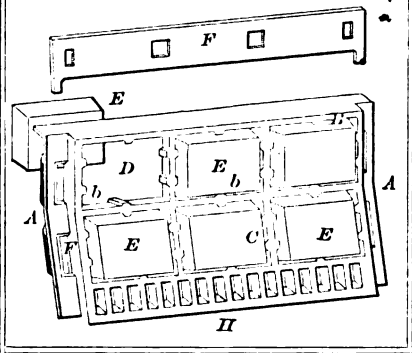

91692—W. Vogel—*Ash Sifter.*

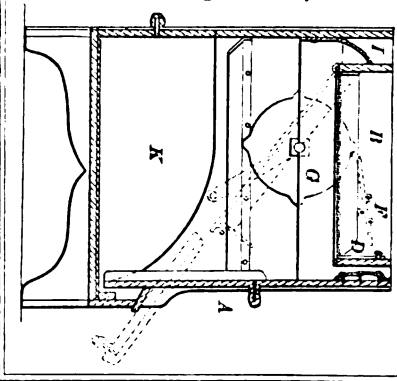

91691—J. W. Upham—*Water Wheel.*

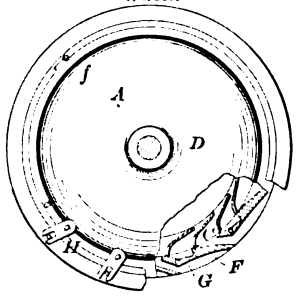

91690—S. J. Tucker—*Writing Desk Calendar.*

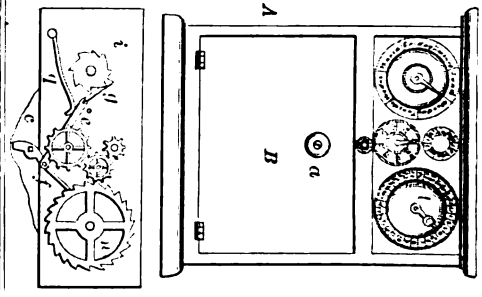

91693—A. G. Waterhouse—*Knife.*

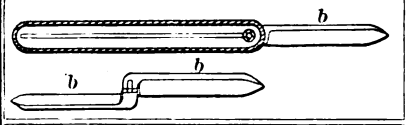

91694—A. M. & M. A. Wier—*Pneumatic Telegraph.*

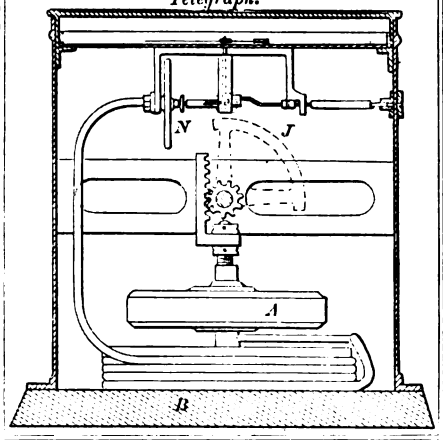

91695—W. E. Wilcox—*Roller for Shafting.*

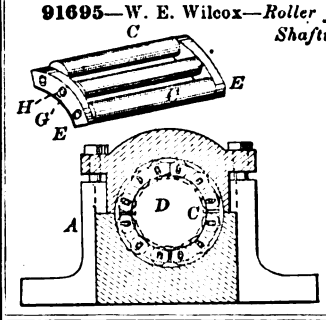

91696—I. Yeamans—*Coffee Pot.*

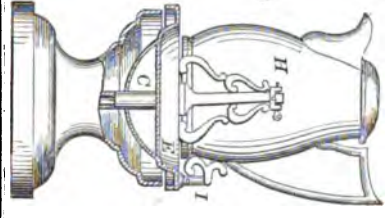

91698—J. H. Adams—*Fruit Picker.*

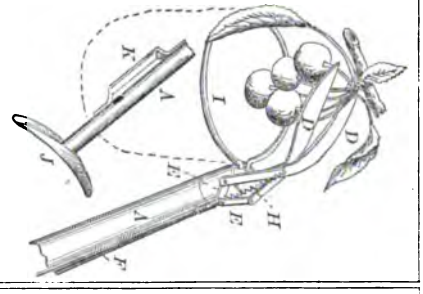

91700—J. Armstrong—*Feed Water Heater.*

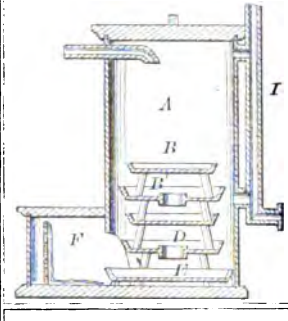

91699—Adams & Sheetz—*Hay Spreader.*

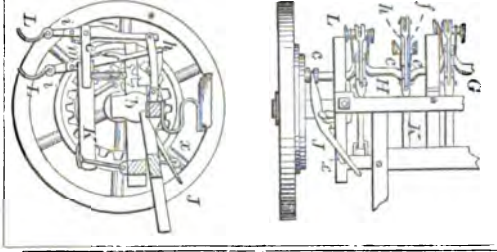

91702—J. C. Beaumont—*Velocipede.*

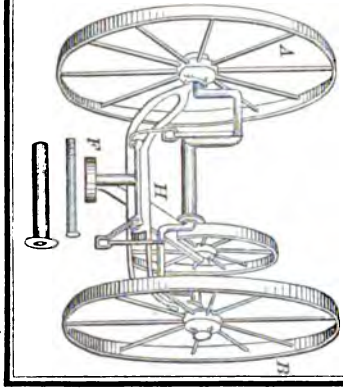

91697—H. Zachgo—*Culinary Vessel*

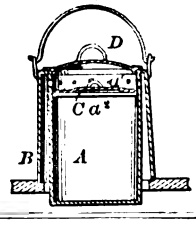

91701—J. D. Bacon—*Shell Fuse.*

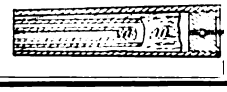

91703—L. W. Beecher—*Match Box.*

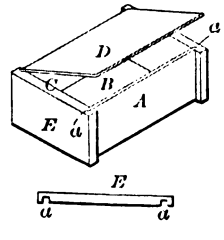

91704—A. S. Bird—*Steam and other Whistles.*

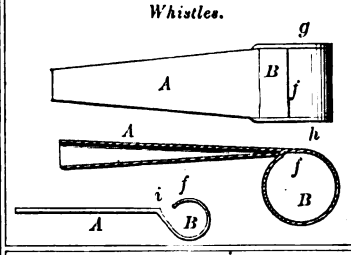

91705—W. Boate—*Hose Carriage.*

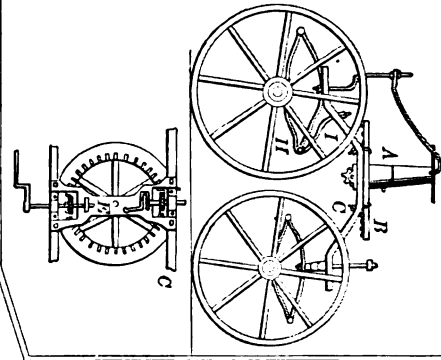

91706—C. E. Boman—*Step Ladder.*

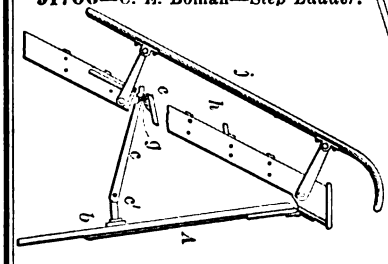

91708—A. H. Boyd—*Sewing Machine Braider.*

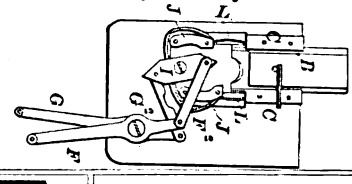

91707—Bowman & Slyker—*Pneumatic Device for Forcing Liquids*

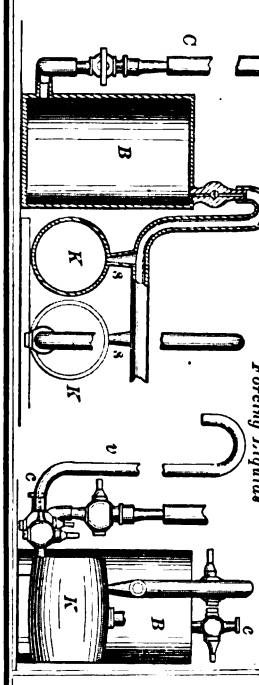

91709—Z. Breed—*Fire Extinguisher.*

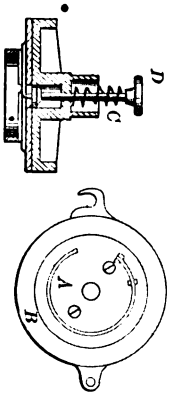

91711—J. R. Burvillo—*Hydrostatic Scale for Weighing Carpets.*

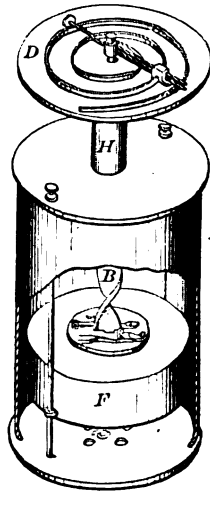

91710—J. Brightbill—*Grain Separator.*

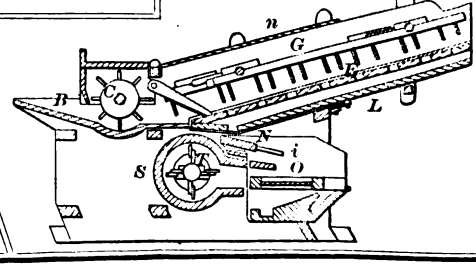

91713—L. G. Carr—*Pipe and Tobacco Box.*

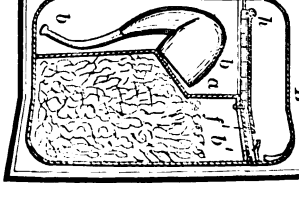

91712—G. Calvert—*Beehive.*

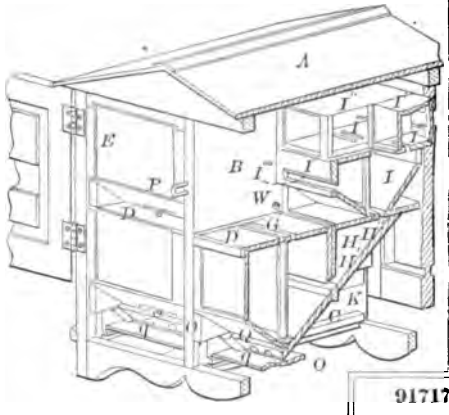

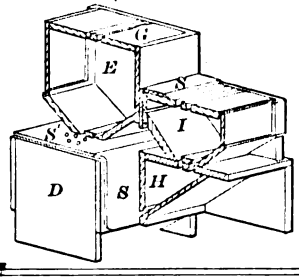

91714—I. H. Chappell—*Wagon Seat.*

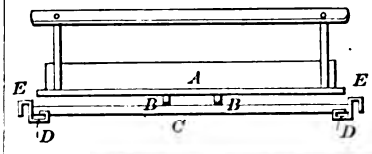

91716—W. Clemson—*Handle for Crosscut Saws*

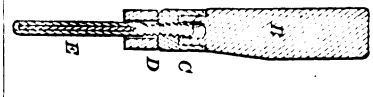

91717—A. Cornell—*Thresher, Separator and Clover Huller.*

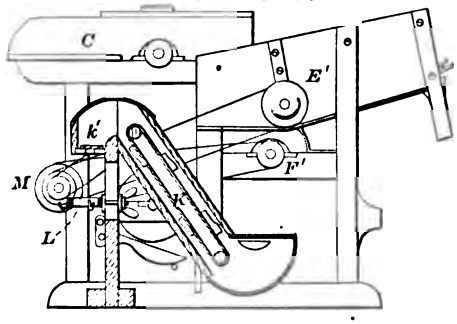

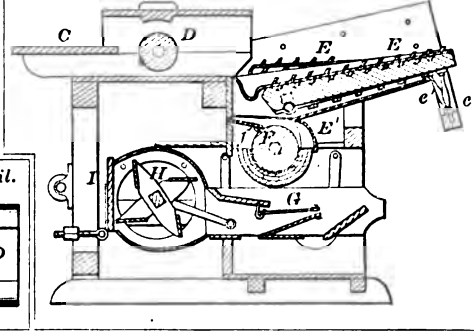

91715—Cheney & Ingalls—*Churn Dasher.*

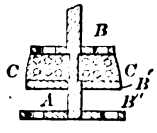

91719—J. F. Cranston—*Railway Rail.*

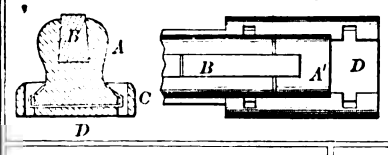

91720—C. O. Crosby—*Last.*

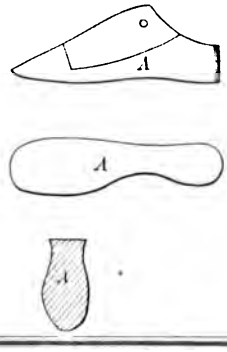

91718—R. D. Craft—*Cultivator.*

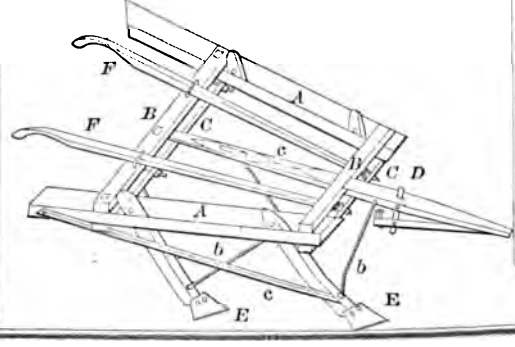

91721—Cummings & Childs—*Plow.*

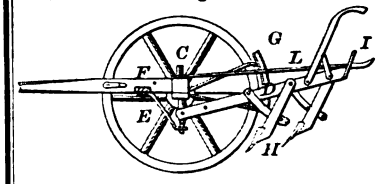

91722—A. G. Davis—*Mouse Trap.*

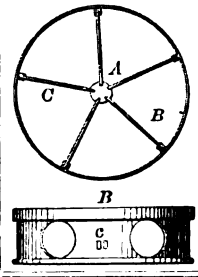

91723—L. S. Deming—*Gate.*

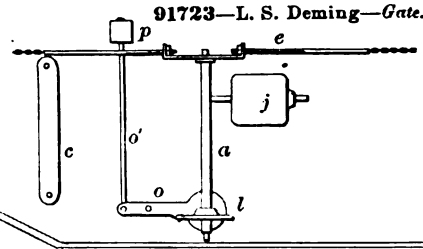

91724—L. L. Deweese—*Nut Lock.*

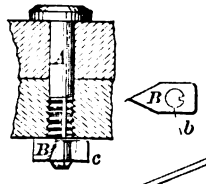

91725—S. B. Dougherty—*Safety Valve.*

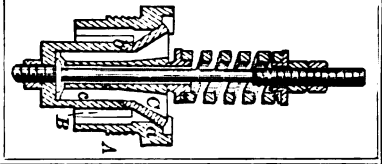

91727—W. A. Dryden—*Cultivator Joint.*

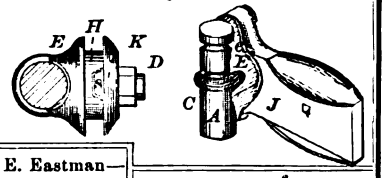

91729—R. Eickemeyer—*Felting Machine.*

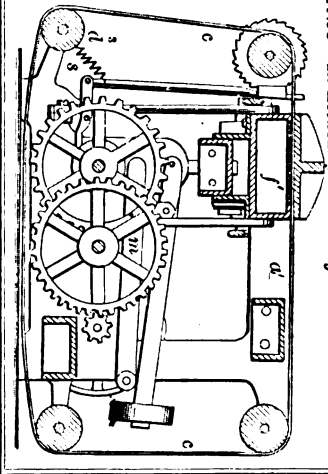

91728—W. E. Eastman—*Photographic Card Holder.*

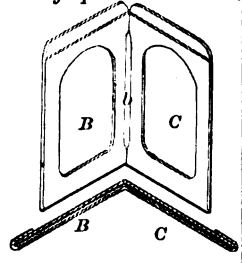

91726—H. S. Draper—*Fruit Jar.*

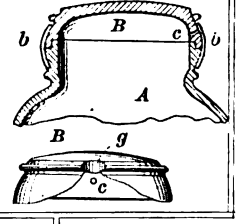

91730—R. Eickemeyer—*Hat Stretching Machine.*

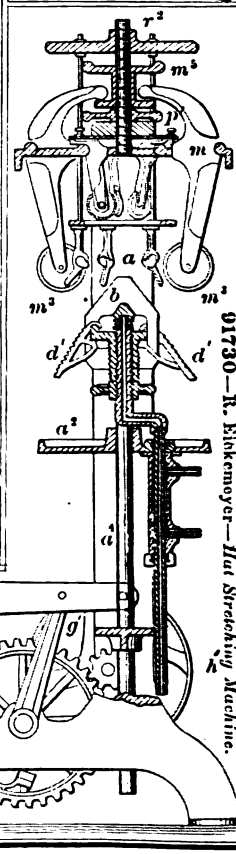

91731—C. H. Farnham—*Feather Renovator.*

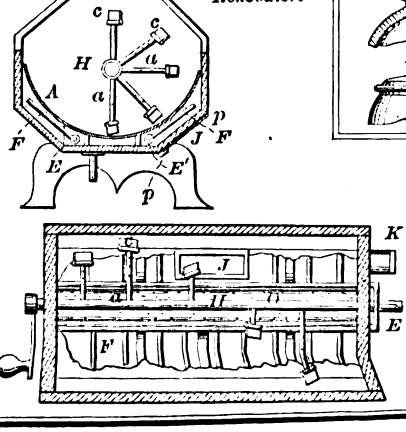

91732—D. Fitzgerald—*Railway Signal and Switch.*

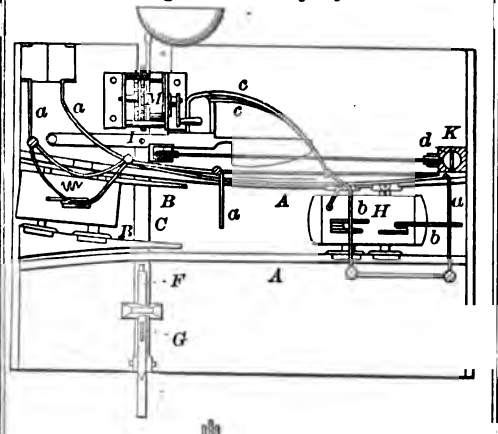

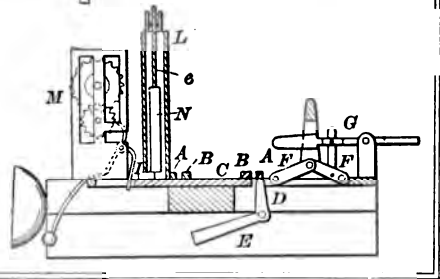

91733—Fowler & Clements—*Door Lock.*

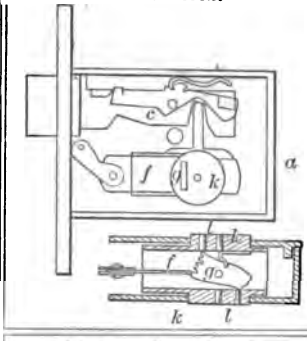

91734—Fraser & Austin—*Velocipede.*

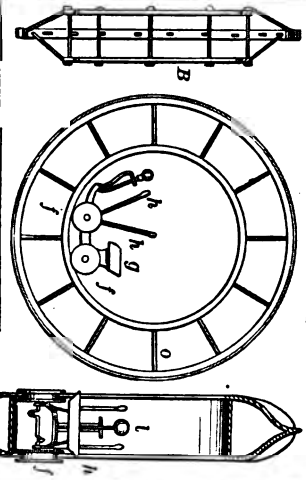

91735—Frazeur & Locklin—*Gate.*

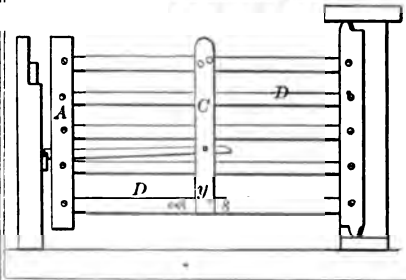

91737—E. F. Gilbert—*Instruction Puzzle.*

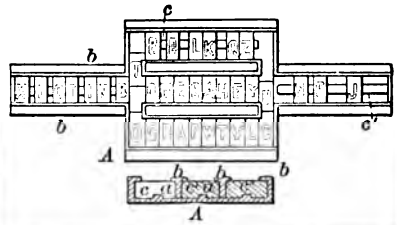

91738—R. A Goodyear—*Bed Bottom.*

91739—D. H. Gould—*Water Wheel.*

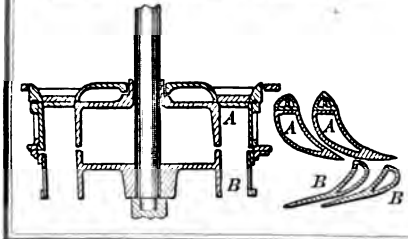

91736—Fritz & Sayre—*Railway Rail Joint.*

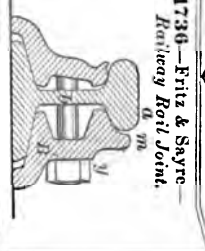

91740—G. Halstead—*Iron Roof Purlin.*

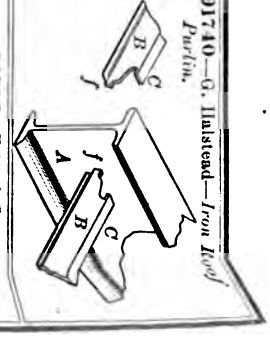

91741—F. J. Hart—*Hand Stamp.*

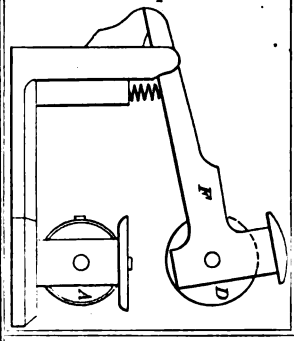

91742—J. Hatch—*Paper Cutting Machinery.*

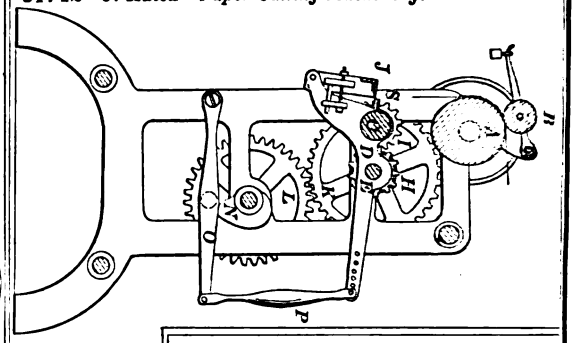

91743—L. Hayner—*Coal Bucket.*

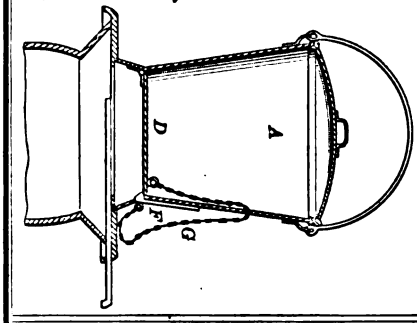

91744—C. Hepert—*Animal Trap.*

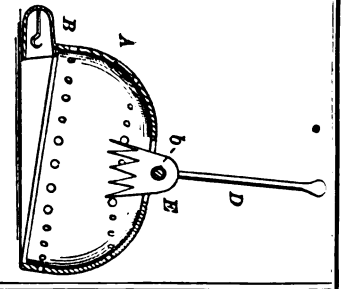

91745—J. G. Houszey—*Bridge.*

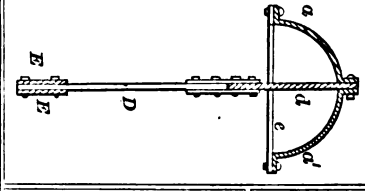

91746—C. W. Hill—*Window Curtain Cornice.*

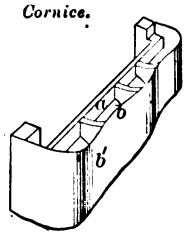

91747—J. Hughes—*Harness Pad.*

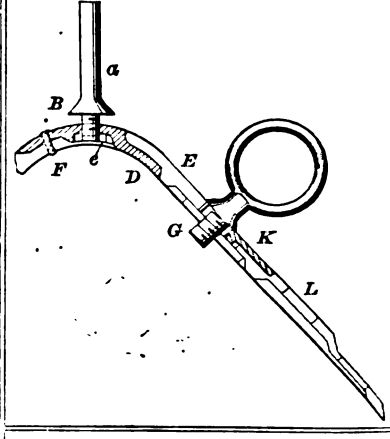

91748—A. Jameson—*Paper Bag.*

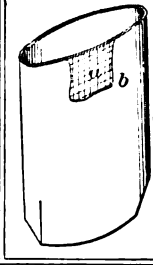

91749—Jennings & Bounds—*Bedstead.*

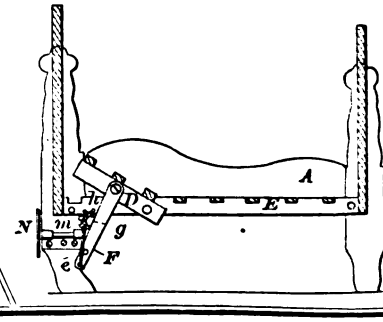

91750—W. F. Jones—*Pump.*

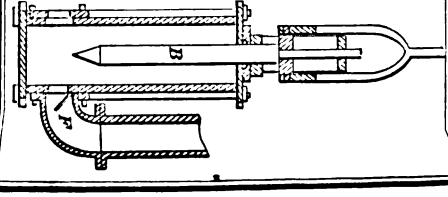

91752—Jordon & Doty—*For Upsetting, Punching and Cutting Tires.*

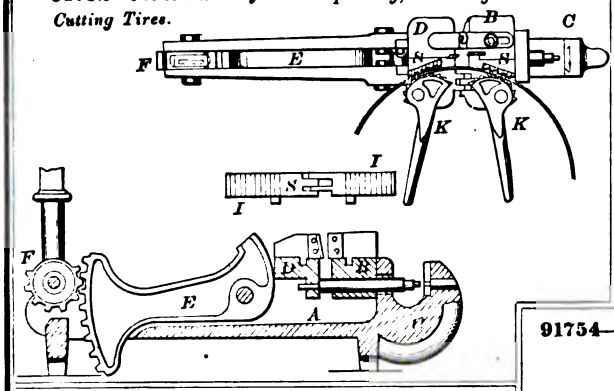

91756—C. Lomax—*Boot Crimp.*

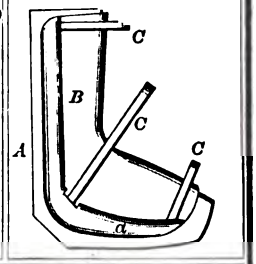

91754—N. Lawrence—*Coffee Pot.*

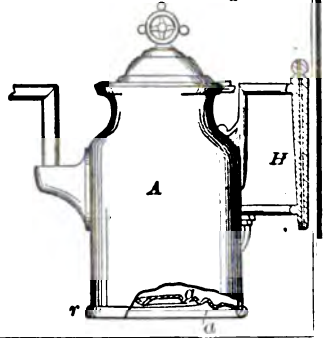

91753—J. H. La Bau—*Striking Movement for Clocks.*

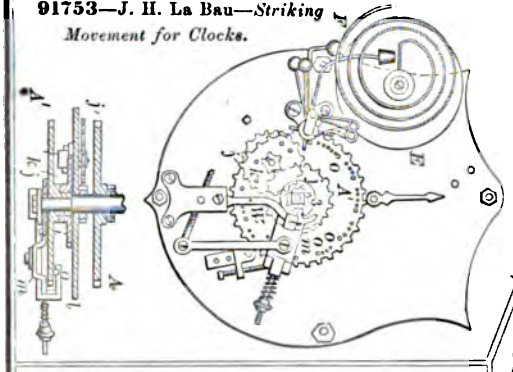

91760—L. Moody—*Propelling Apparatus.*

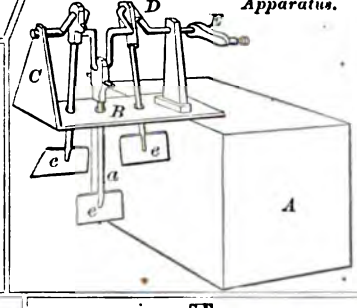

91755—E. Lindholm—*Guide Rolling Hoop.*

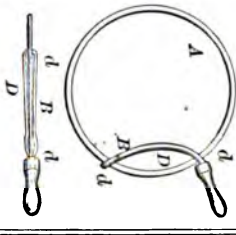

91757—G. G. Lyman—*Harvester.*

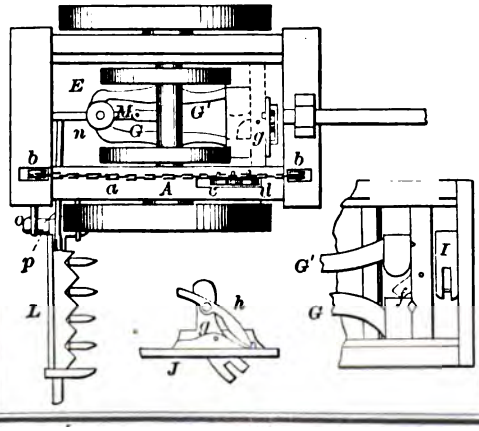

91758—P. Macy—*Toy Steam Engine.*

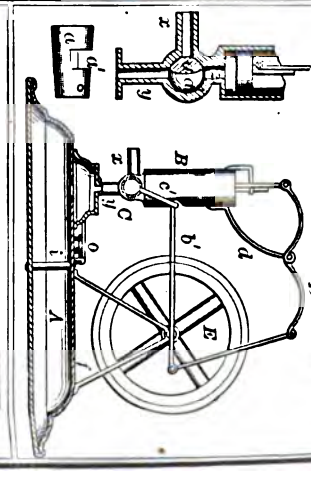

91759—McCollum & Parr—*For Making Ginger Snaps and Crackers.*

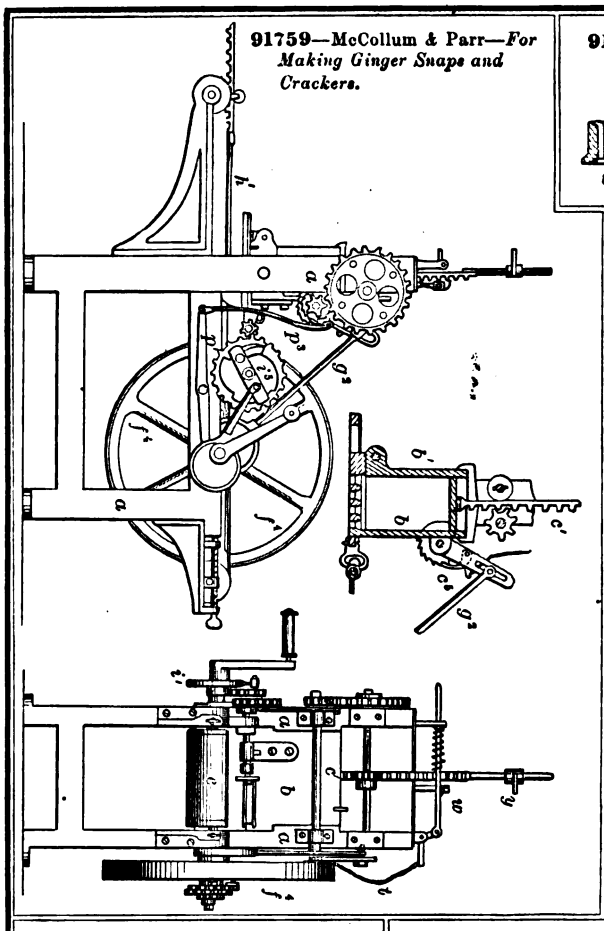

91762—H. W. Moore—*Car Wheel.*

91763—A. J. Morse—*Draught Cock.*

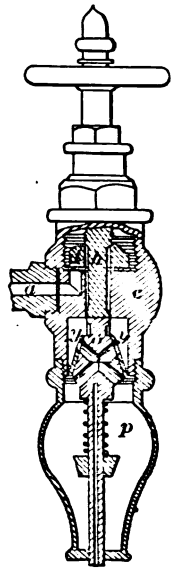

91761—G. R. Moore—*Lever Water Closets.*

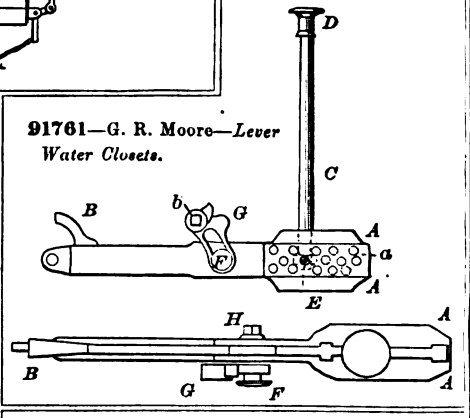

91765—J. North—*Rock Drilling Apparatus.*

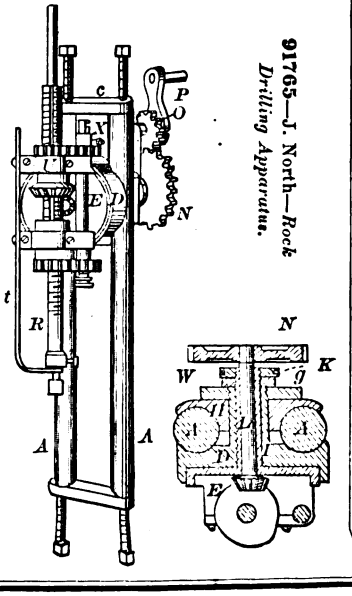

91766—J. S. Ostrander—*Roller Case for Maps and Charts.*

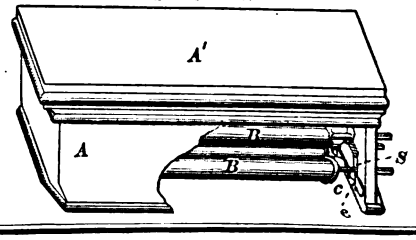

91764—A. Newell—*Shingle Machine.*

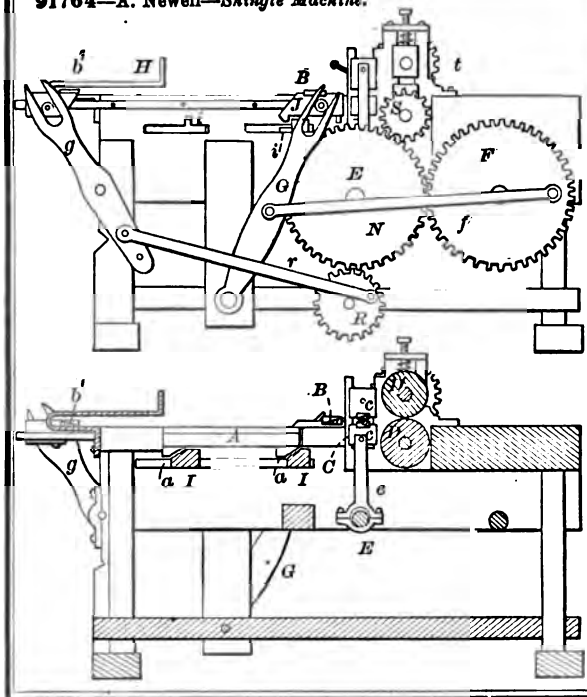

91769—E. D. Pritchard—*Low Water Indicator.*

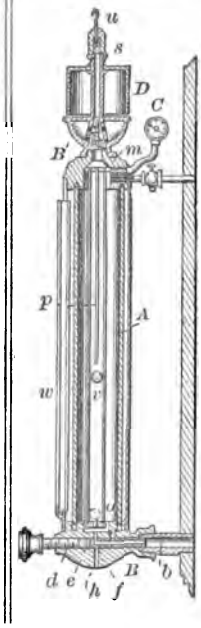

91767—D. Parkhurst—*Head Block for Saw Mills.*

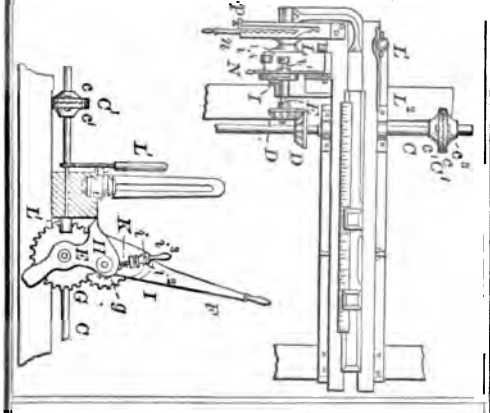

91772—H. Royer—*For Treating Hides.*

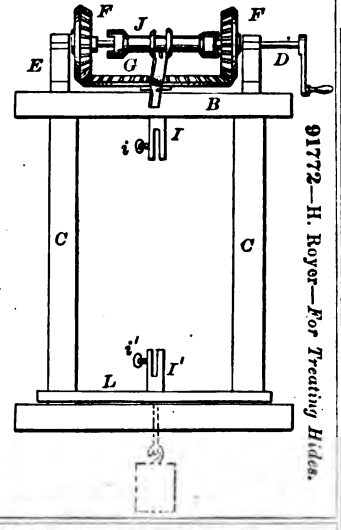

91770—F. Ransom—*Condenser.*

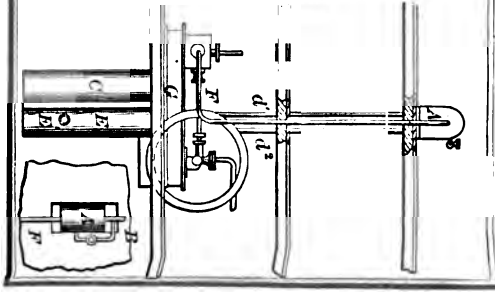

91771—W. Robbins—*Ditcher.*

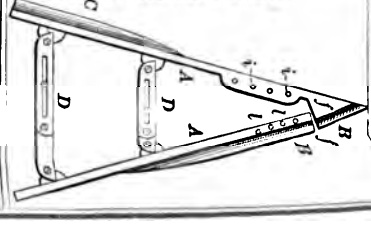

91773—R. Ruston—*Gauge for Dressing Millstones.*

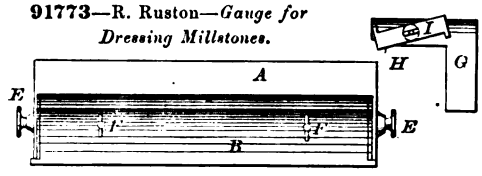

91774—I. N. C. Saville—*Last.*

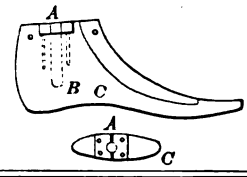

91775—G. Scott—*Elevator.*

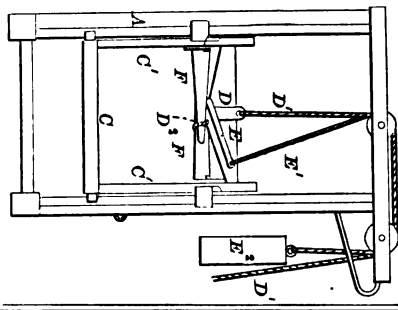

91776—F. S. Sears—*Butter Chest.*

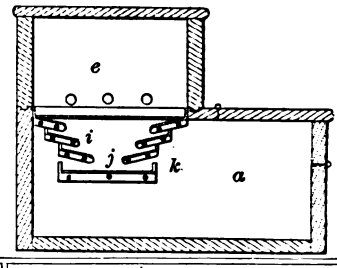

91777—Seeger, Loveless & Throp—*Clod Fender.*

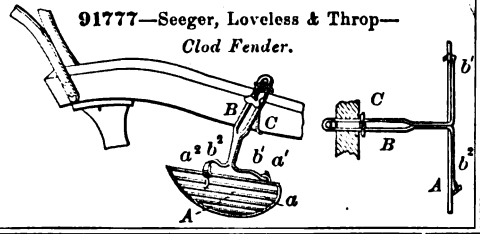

91778—F. Shaller—*Lamp Burner.*

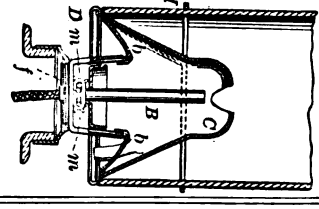

91779—S. S. Simmons—*Vehicle Seat.*

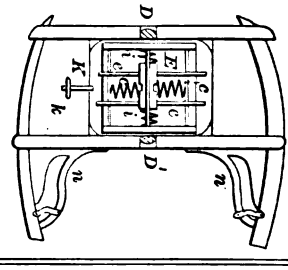

91780—R. Smith—*For Finishing Paper Boxes.*

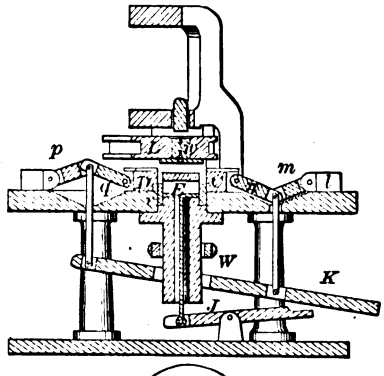

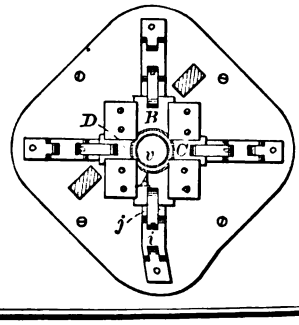

91781—A. J. Smith—*Lasting Iron.*

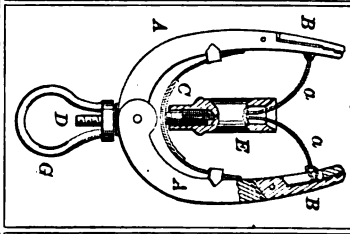

91782—H. E. Snyder—*Spice Box.*

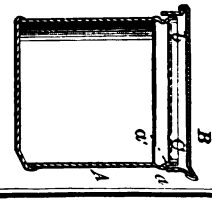

91783—J. Snell—*Gate.*

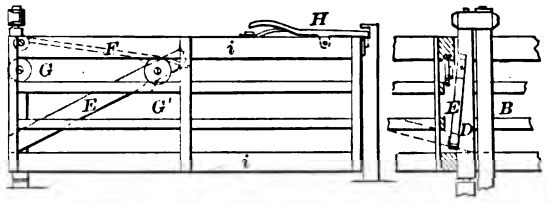

91787—T. B. & J. Stout—

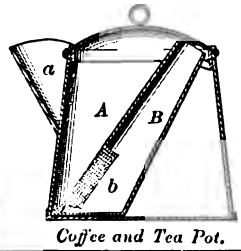

Coffee and Tea Pot.

91784—G. Stackpole—*For Sewing Brooms.*

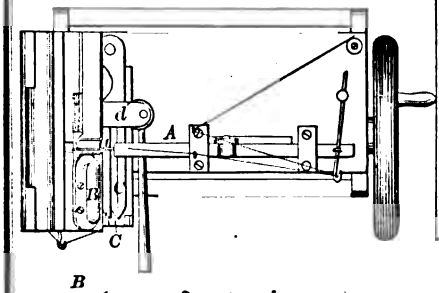

91810—J. Quinlan—*Drawer Pull and Label.*

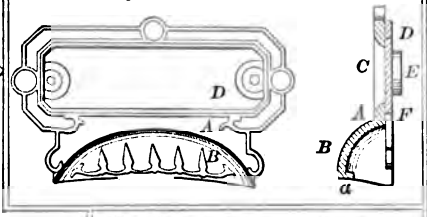

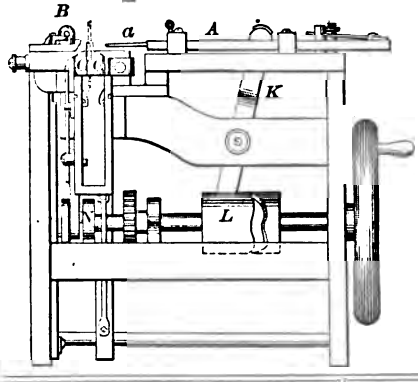

91788—H. D. Stover—*Lathe.*

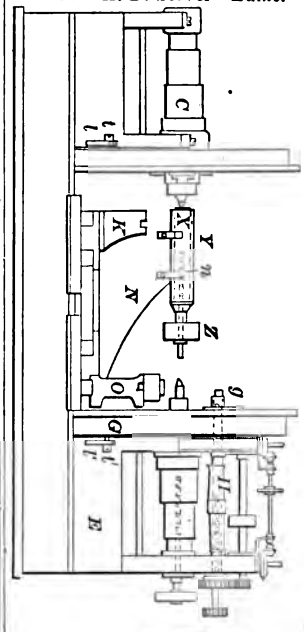

91786—J. M. Stoner—*Corn Fertilizer and Planter.*

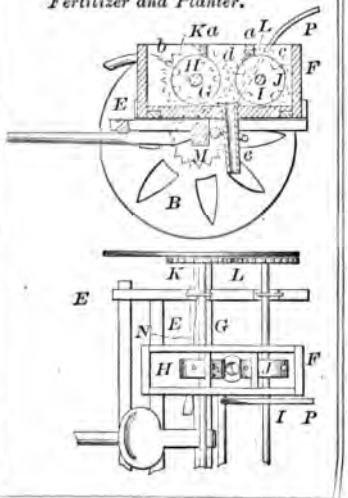

91785—M. A. Stevens—*Bath Tub.*

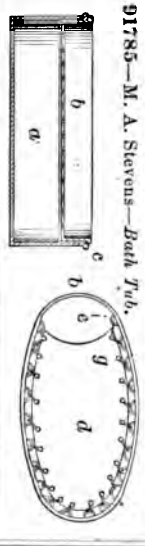

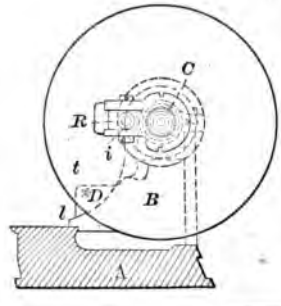

91789—O. Tackmann—*Thill Coupling.*

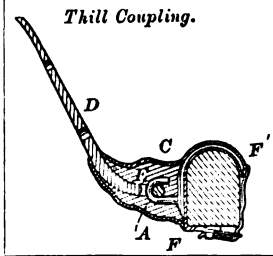

91790—J. A. Talpey—*Hay Spreader.*

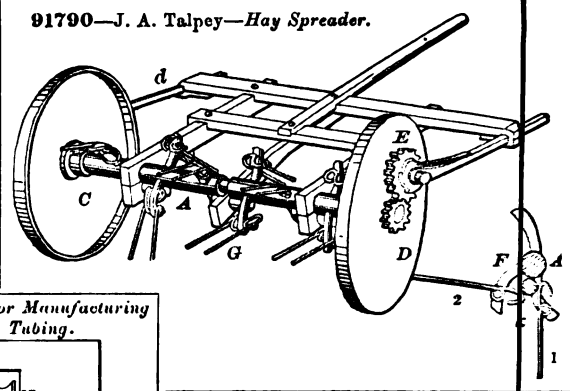

91791—S. P. M. Tasker—*For Manufacturing Welded Wrought Metal Tubing.*

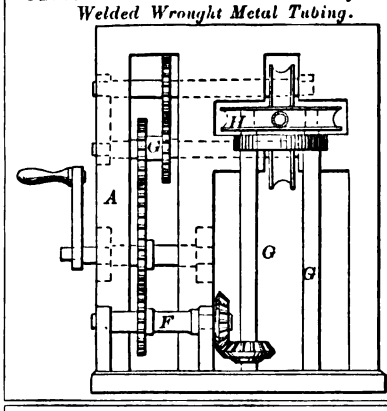

91792—S. Teachout—*Water Wheel.*

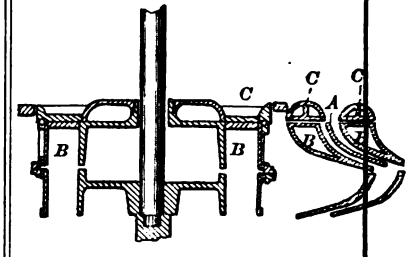

91793—R. Themar—*Mosquito Guard.*

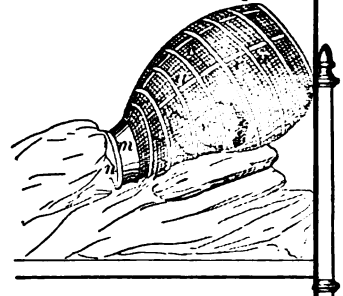

91794—B. O. Thompson—*Clothes Wringer and Mangle.*

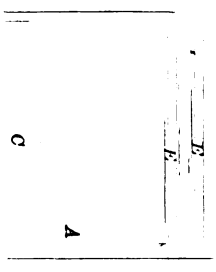

91795—F. M. Untiedt—*Chopping Knife.*

Fig. 1

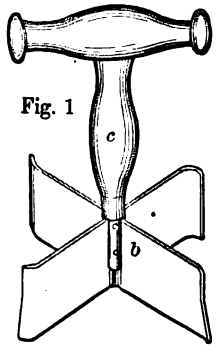

91796—W. W. Vanderbilt—*Ship Ventilator.*

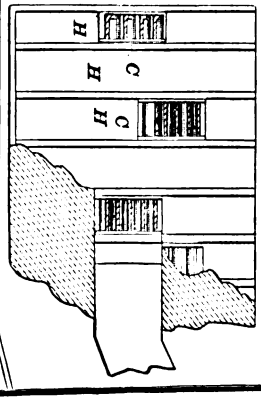

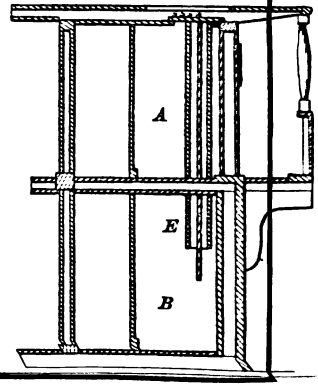

91797—W. T. Vann—*Horseshoe Ndil Pointer.*

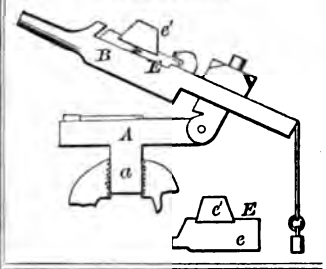

91798—L. Van Wie—*Potato Planter.*

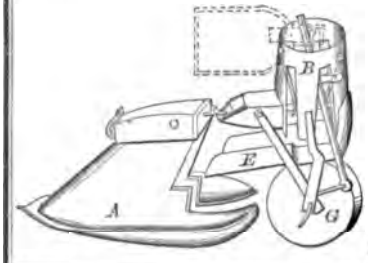

91799—T. Vreeland—*Seed Sower.*

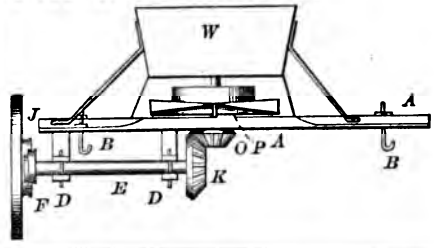

91800—Warren & Wilson—*Steam Generator for Combustion.*

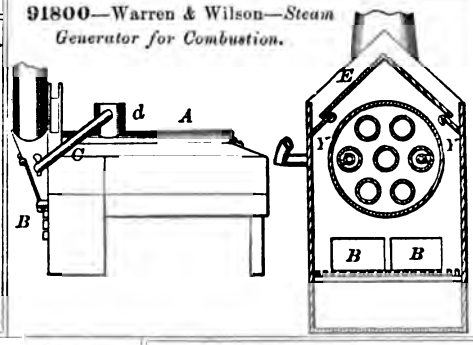

91801—J. Webster—*For Preventing Incrustation in Steam Generators.*

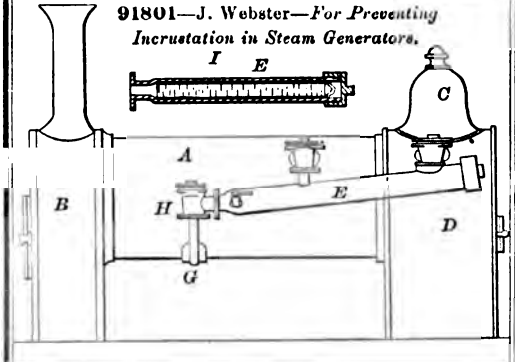

91802—W. J. Wells—*Cultivator.*

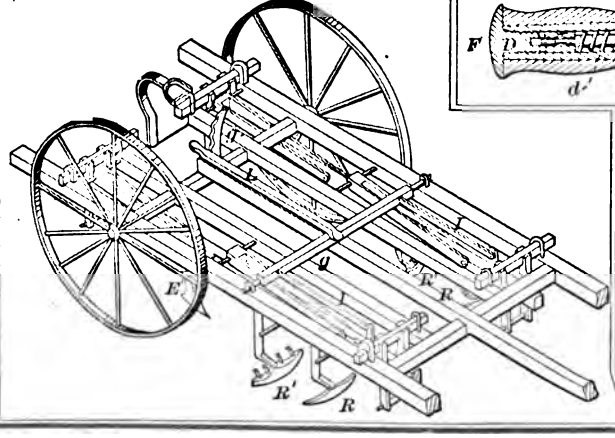

91804—W. E. Wilcox—*Railway Car Axle Box.*

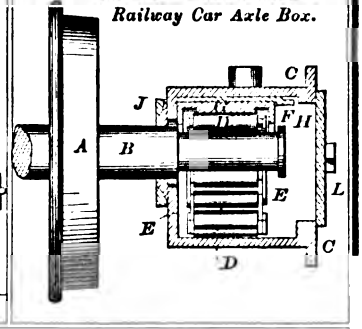

91806—N. Woodbury—*Centreing Awl.*

91803—H. Whitney—*Detachable Stove Pipe Clothes Dryer.*

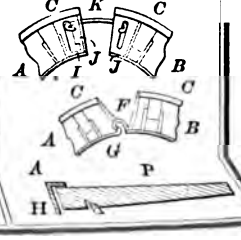

91805—Wirts & Swift—*Grain Separator.*

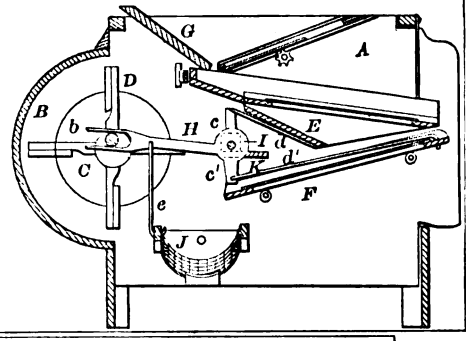

91809—A. Worster—*Harness Loop.*

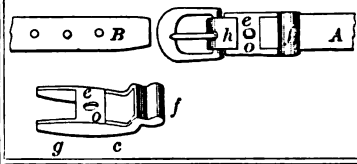

91810—J. Quinlan—*Drawer Pull and Label.*

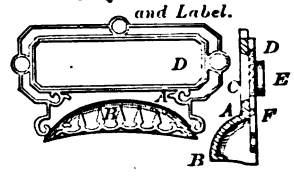

91807—A. Worster—*Trace Buckle.*

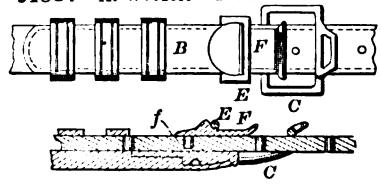

91808—A. Worster—*Trace Buckle.*

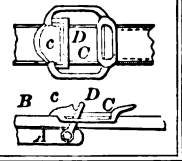

91812—J. M. Aubrey—*Lamp Light Extinguisher.*

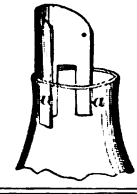

91813—H. Baeuerle—

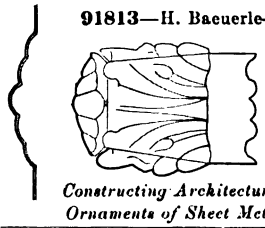

Constructing Architectural Ornaments of Sheet Metal.

91811—J. P. Allensworth—*Wagon Coupling.*

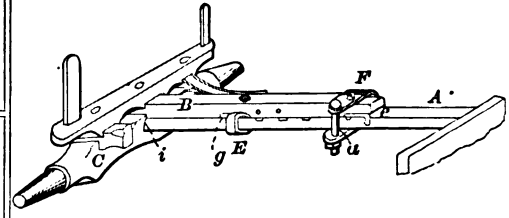

91815—H. J. Bailey—*For Making Tin-Lined Lead Pipe.*

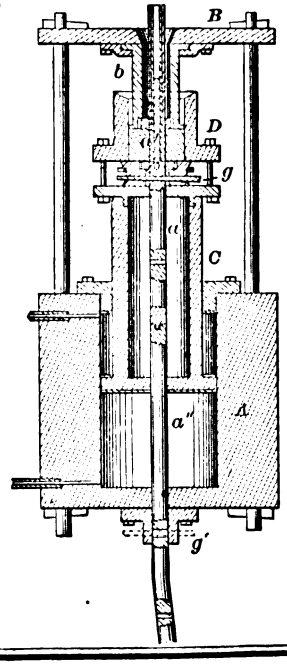

91814—H. J. Bailey—*For Preparing Bar Lead.*

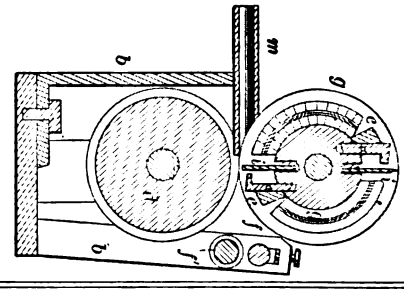

91816—J. Baughman—*Gate.*

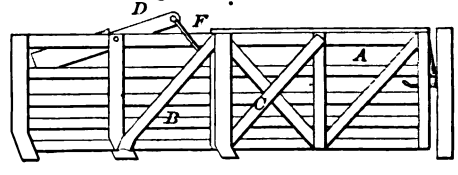

91817—W. E. Beman—*Oar Lock.*

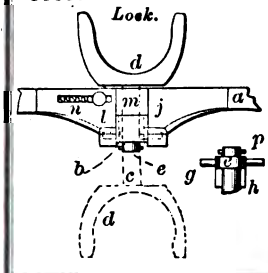

91818—E. M. Boxer—*Cartridge.*

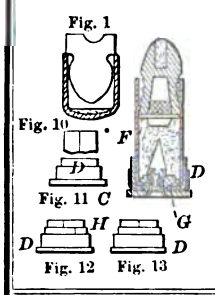

91819—W. Bradbury—*For Raising and Lowering Goods.*

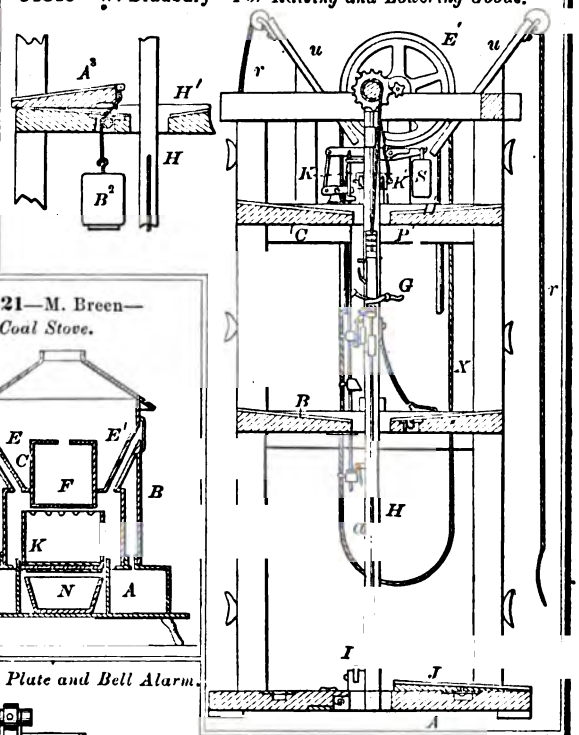

91820—W. G. Brady—*Door Plate and Bell Alarm.*

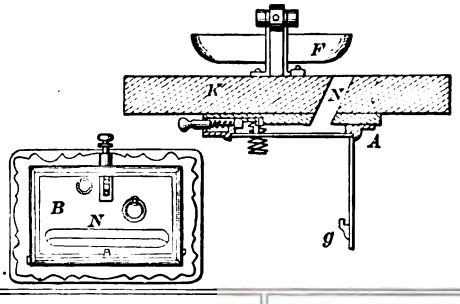

91821—M. Breen—*Coal Stove.*

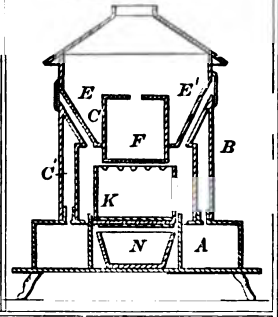

91822—W. H. Brown—*Machine Indicator for Cloth Manufacturing, &c.*

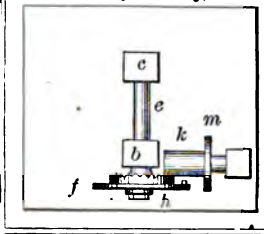

91823—F. M. Buckles—*Eaves Trough Attachment.*

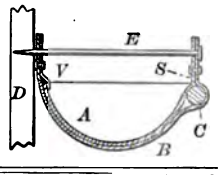

91824—D. C. Chipman—*Railroad Car Heater.*

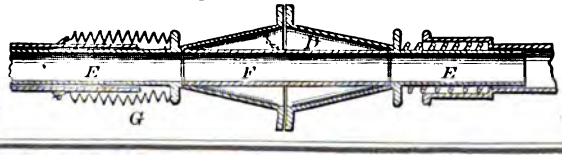

91825—H. Churchman—*Boot Blacking Apparatus.*

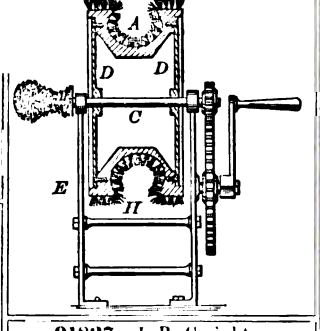

91827—J. R. Creighton—*Speaking Tube Signal.*

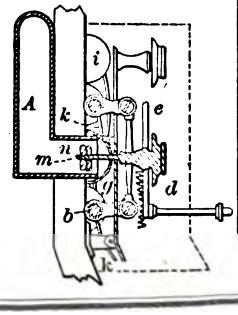

91826—W. R. Close—*Shingle Machine.*

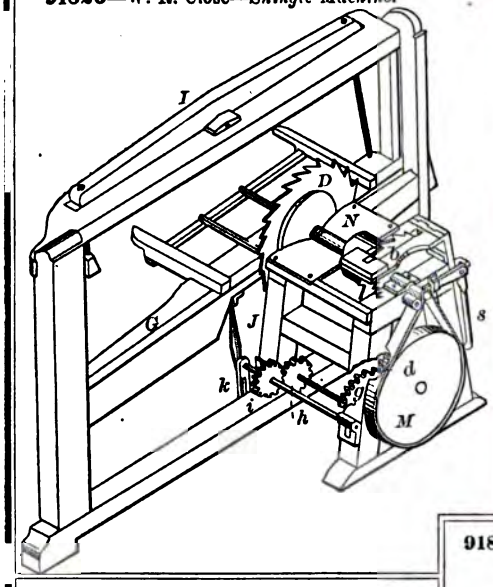

91828—T. Dark—*Sewer.*

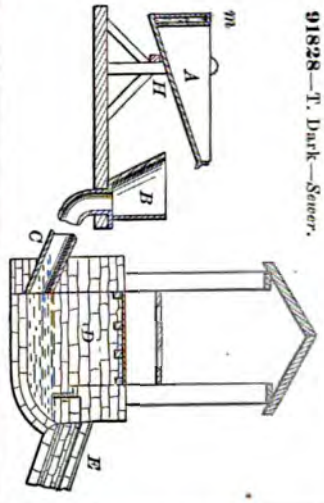

91829—J. G. Dillaha—*Velocipede.*

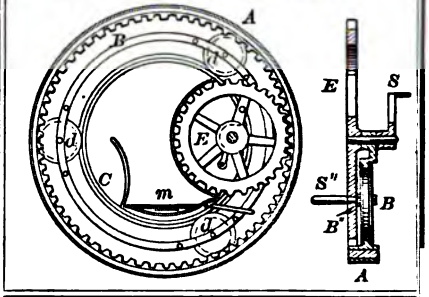

91830—H. W. Eastman—*Dressing Case.*

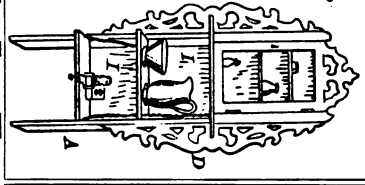

91831—J. B. Eaton—*Holdback for Thills.*

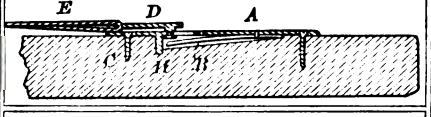

91832—J. Edson—*Chair.*

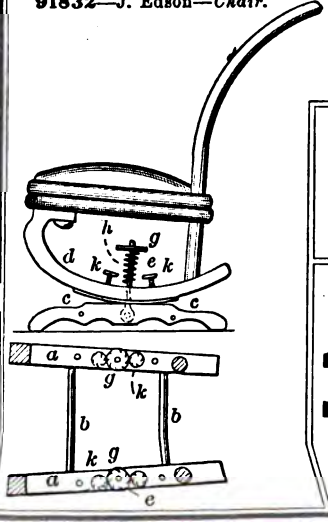

91835—Forbes & Fletcher—*Wall or Bracket Caster.* a

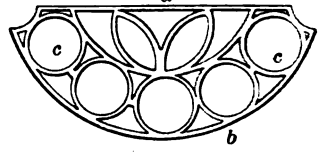

91833—Erpelding & Huttmann—*Lamp.*

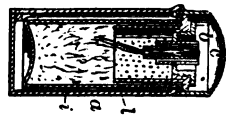

91834—H. W. Evans—*Steam Radiator.*

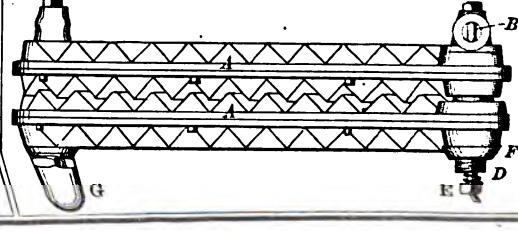

91856—H. Maurer—*For Repressing Bricks.*

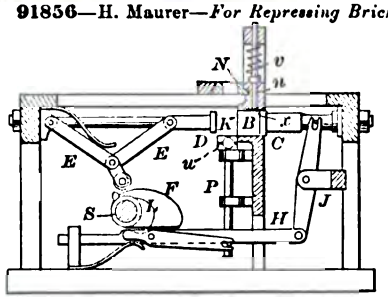

91858—R. W. McClelland—*Horse Rake.*

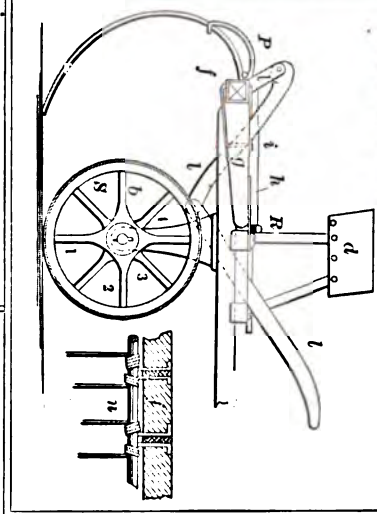

91861—A. Miller—*Wood Pavement.*

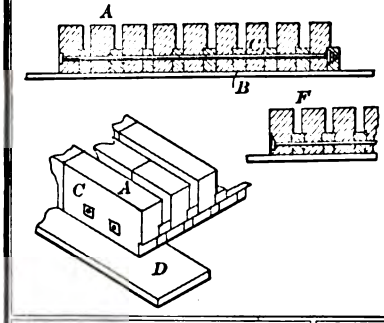

91863—W. Owen—*Self-Oiling Car Wheel.*

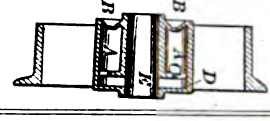

91859—R. W. McClelland—*Carriage Wheel.*

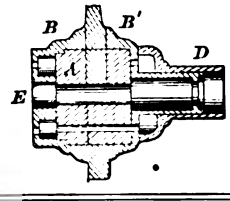

91867—G. H. Reister—*Seed Sower.*

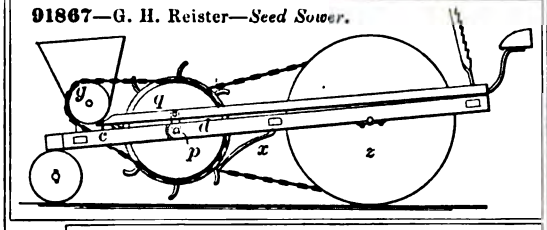

91865—H. G. Pein—*Latch and Lock.*

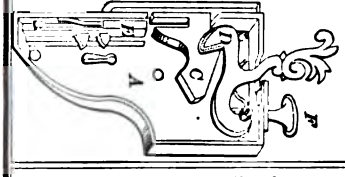

91866—W. F. Pratt—*For Removing Lint from Cotton Seed.*

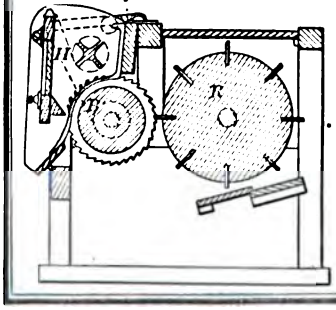

91864—W. Palliser—*Ordnance.*

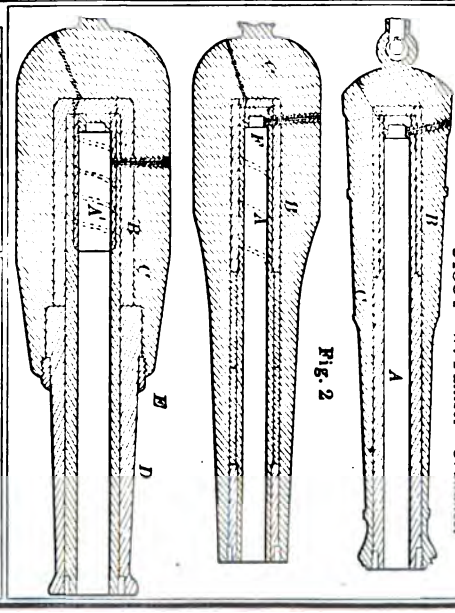

Fig. 2

91847—E. S. Huff—*Plow Cultivator.*

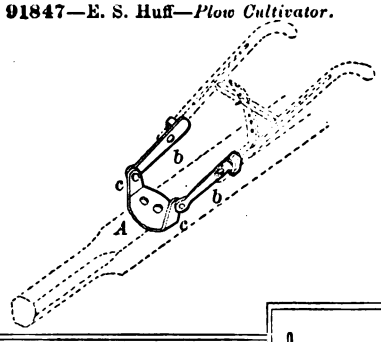

91849—E. A. Hyde—*Pneumatic Dental Plugger.*

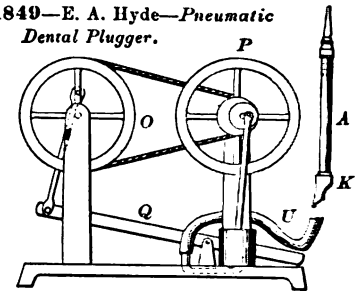

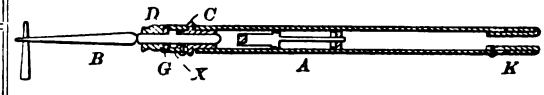

91848—D. W. Hunt—*For Kyanizing Wood.*

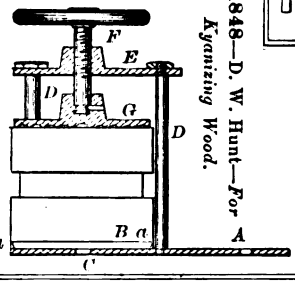

91850—G. A. Jasper—*Sugar Sifter.*

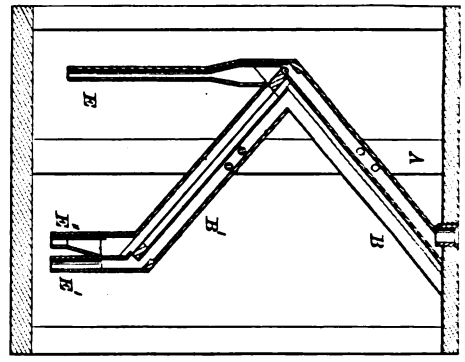

91851—W. H. Johnson—*Stove.*

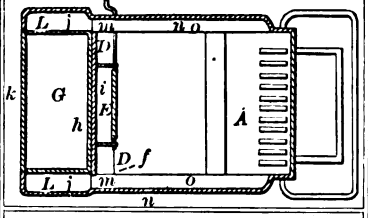

91852—S. H. Jones—*Bellows for Reed Organs.*

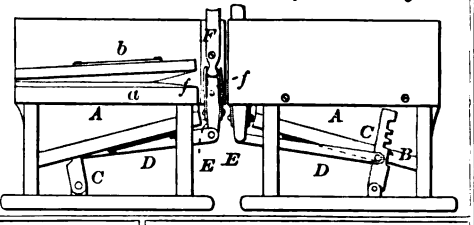

91853—W. P. Kilgore—*Cant Hook.*

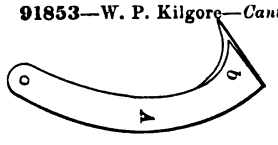

91855—P. S. Luther—*Water Closet.*

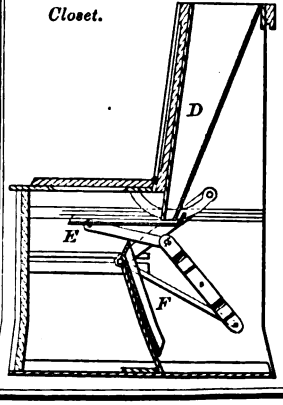

91857—O F. Mayhew—*Stove.*

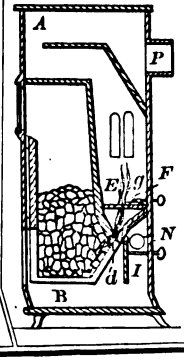

91854—J. L. Kreider—*For Hitching Horses.*

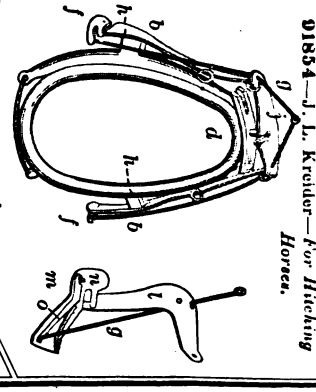

91856—H. Maurer—*For Repressing Bricks.*

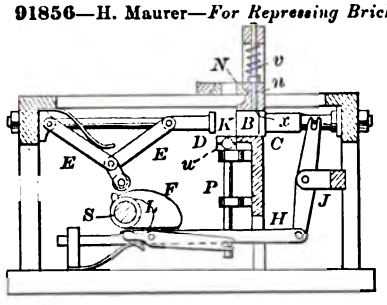

91858—R. W. McClelland—*Horse Rake.*

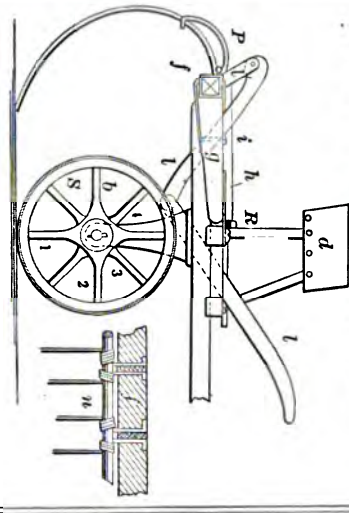

91861—A. Miller—*Wood Pavement.*

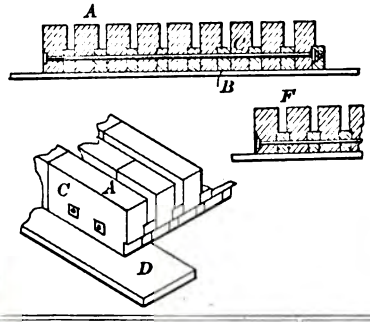

91863—W. Owen—*Self-Oiling Car Wheel.*

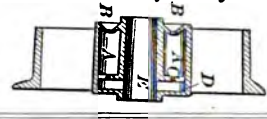

91859—R. W. McClelland—*Carriage Wheel.*

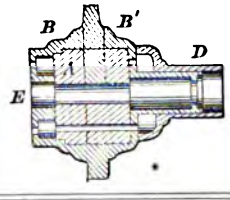

91867—G. H. Reister—*Seed Sower.*

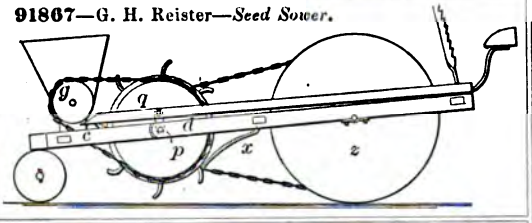

91865—H. G. Pein—*Latch and Lock.*

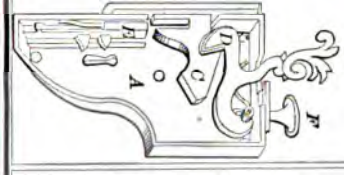

91866—W. F. Pratt—*For Removing Lint from Cotton Seed.*

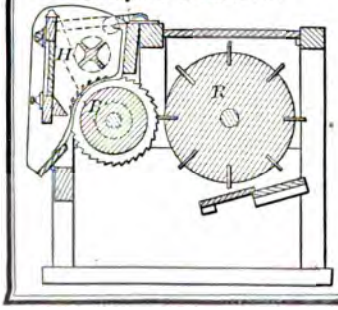

91864—W. Palliser—*Ordnance.*

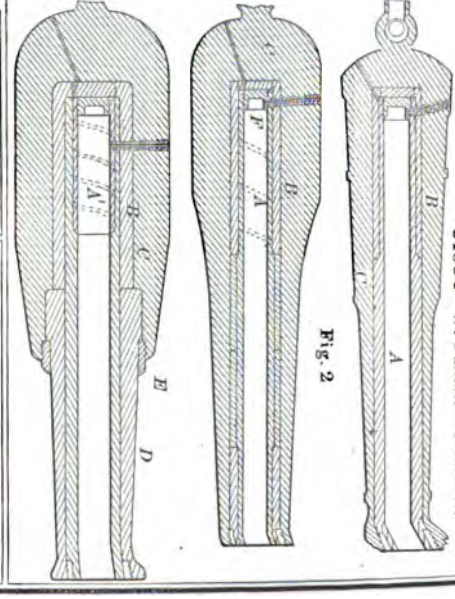

Fig. 2

91860—J. M. McMaster—*Grain Binder.*

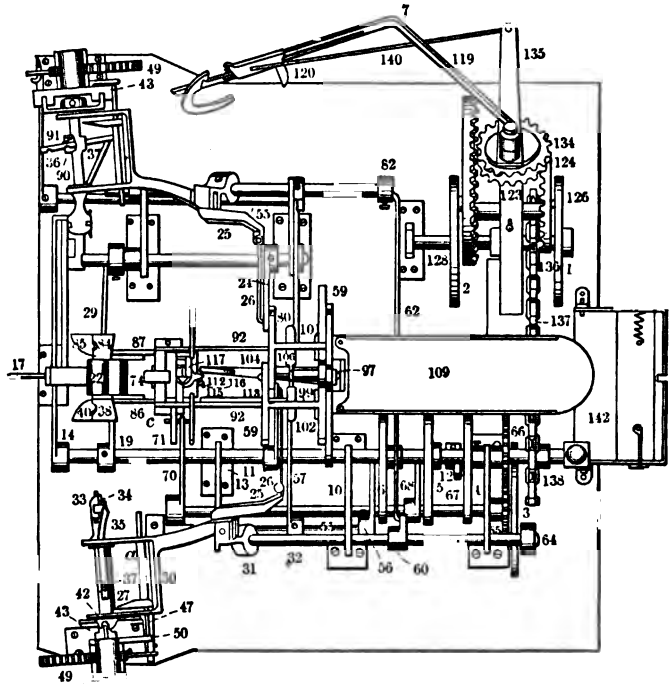

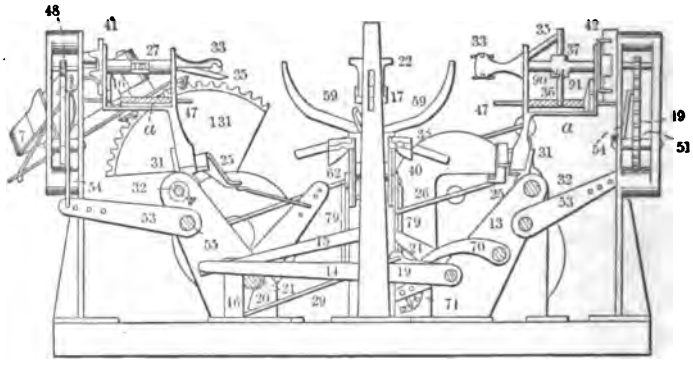

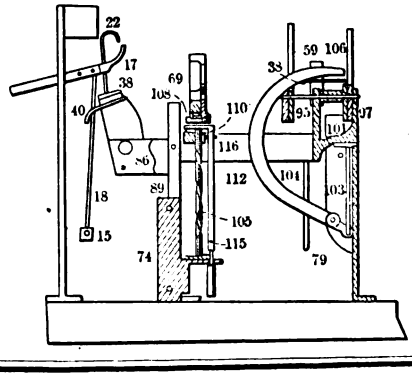

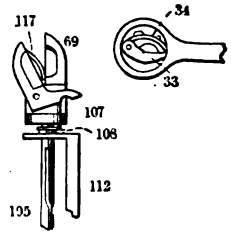

91868—G. H. Reister—*Wind Wheel.*

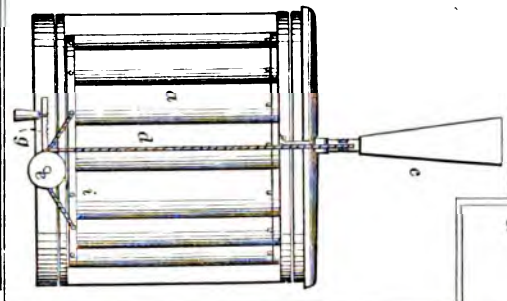

91869—W. K. Rhodes—*Steam Generator.*

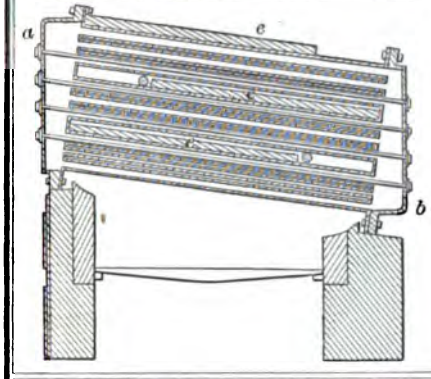

91871—D. C. Ripley—*Attaching Covers to Glass Jars.*

91873—T. L. Rivers—*Caster.*

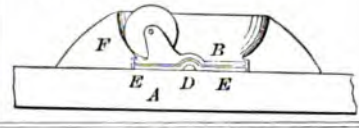

91872—Ritz & Carter—*Shingle Machine.*

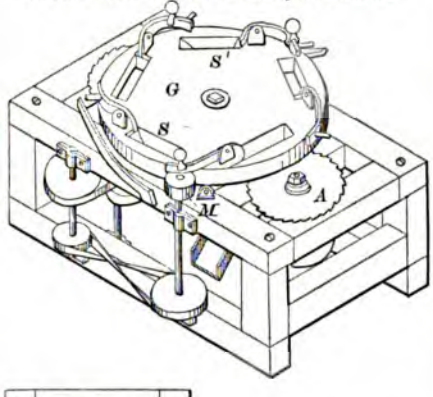

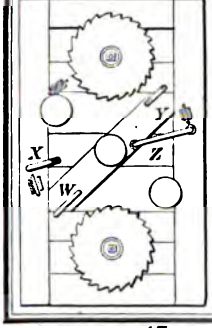

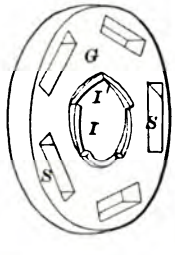

91874—R. & A. S. Robins—*Sulky Corn Planter and Plow.*

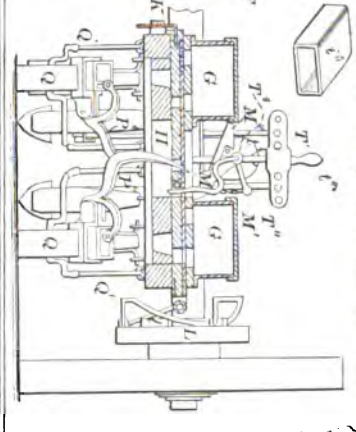

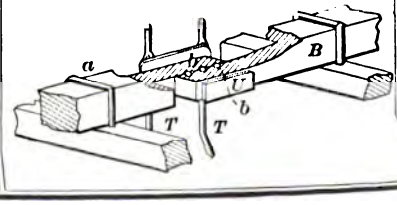

91895—Zierath & Smith—*Scrubbing and Mopping Machine.*

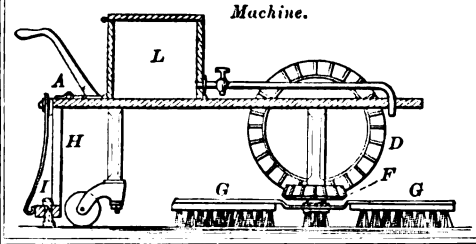

91896—A. M. Allen—*Velocipede.*

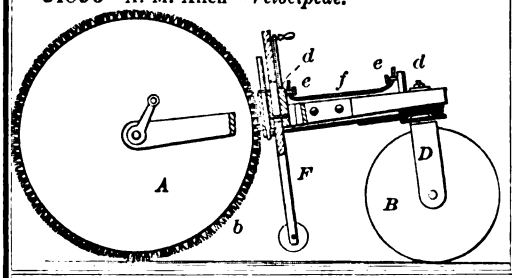

91897—W. F. Andrews—*Potato Digger.*

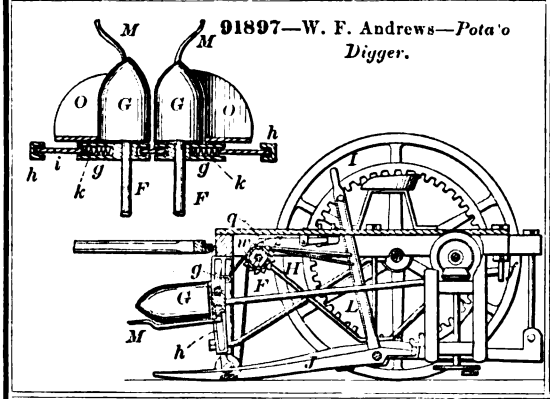

91898—W. B. Bartram—*For Embroidering.*

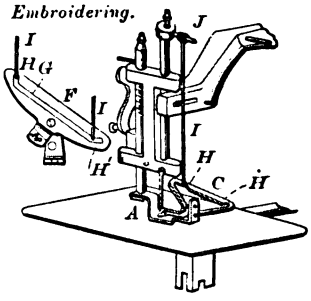

91899—J. J. Beaumont—*Funnel.*

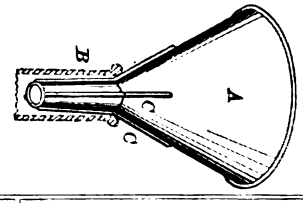

91900—J. M. Blackstock—*Scroll Sawing Machine.*

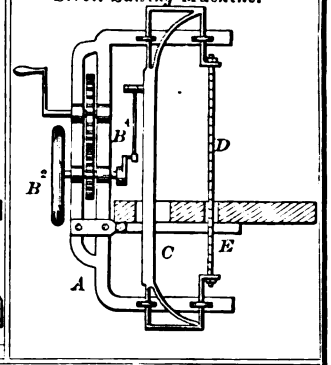

91901—T. S. Blair—*For Pig Blooms.*

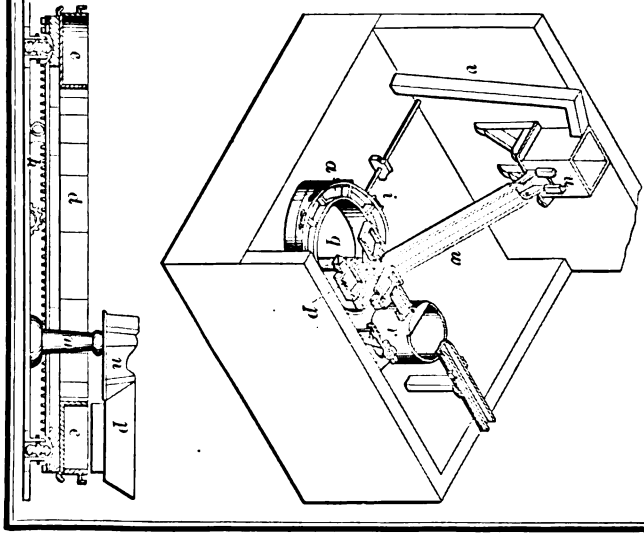

91902—W. M. Bleakley—*Can Opener.*

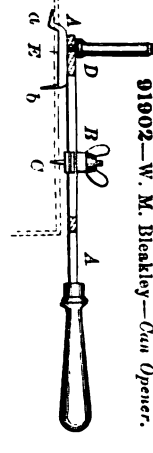

91884—W. Thompson—*Packing Case.*

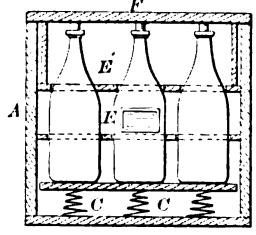

91885—D. G. Watt—*Beehive.*

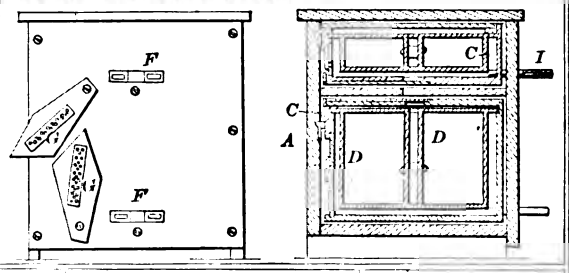

91887—C. B. Weeks—*Hog Trap.*

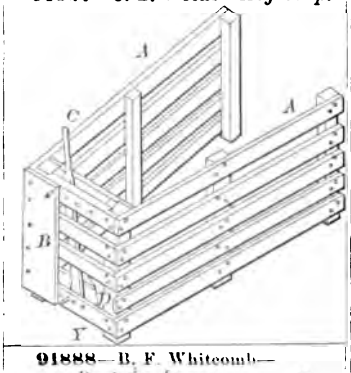

91888—B. F. Whitcomb—*Reed for Looms.*

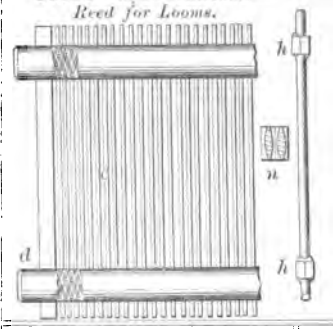

91889—J. B. Williams—*Metal Corrugating Machine.*

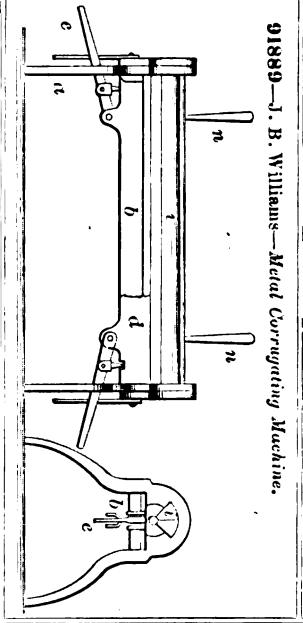

91890—J. B. Williams—*Evaporating Pan.*

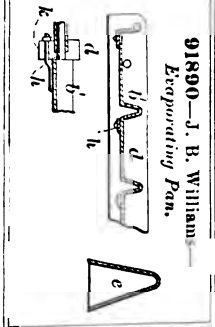

91892—C. Winterbottom—*Try Square and Bevel.*

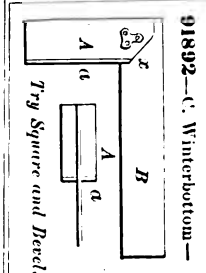

91891—Willis & Rice—*For Winding Thread, &c.*

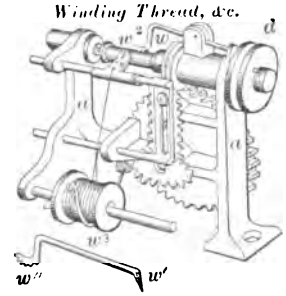

91893—Woodsum & Whitmun—*Railway Sleeper.*

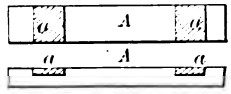

91894—J. A. & S. S. Woodward & Mason—*Cultivator.*

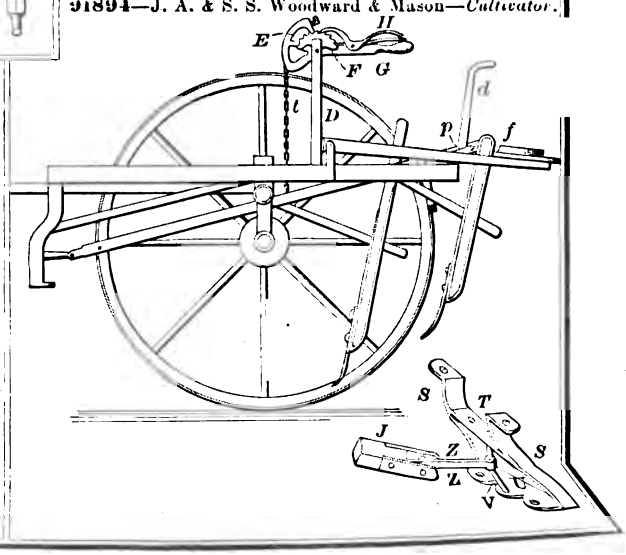

91903—A. C. Brownell—*Sheet Metal Boiler.*

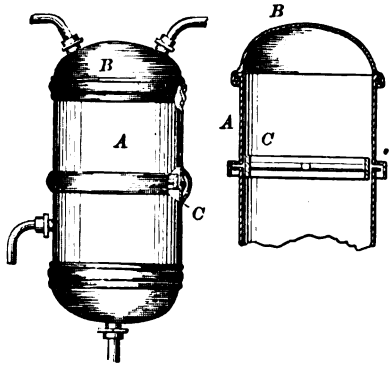

91904—G. W. Bunker—*Corn Planter.*

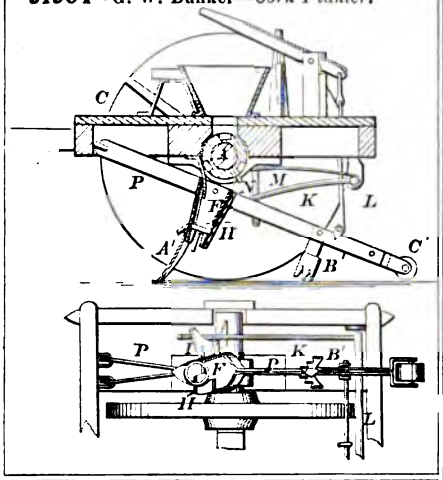

91905—C. Brunschwiler—*Commercial Account Indicator.*

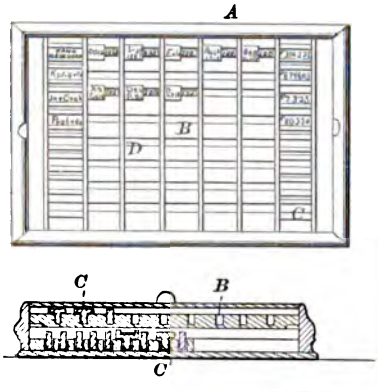

91906—L. L. Burdon—*Button.*

91907—M. Burnett—*Broom.*

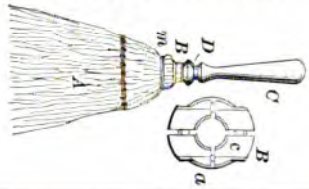

91910—C. S. Clark—*Lathe.*

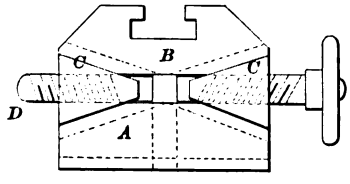

91908—P. H. Carman—*Air Heating Furnace.*

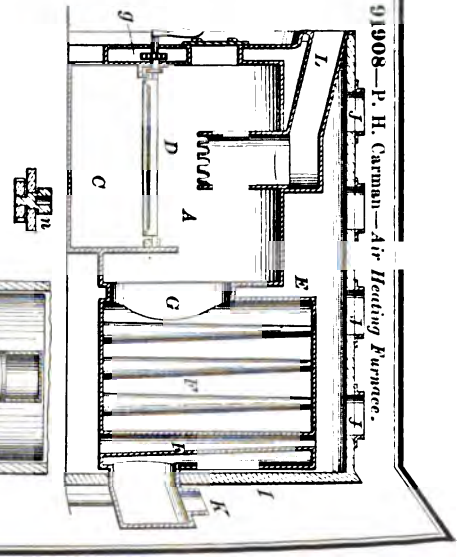

91909—D. R. Chandler—*Anvil and Vise.*

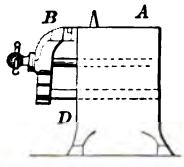

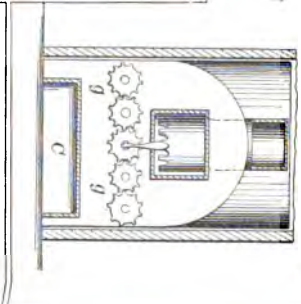

FOR USE IN LIBRARY BUILDING ONLY

DO NOT REMOVE